NOTE:

EXTERIOR HINGED LIGHT POLE WITH 150 WATT HIGH PRESSURE SODIUM LUMINAIRE, 120 VOLT BALLAST, PHOTOELECTRIC CONTROL, WITH HEAT AND IMPACT RESISTANT LENS. POLE IS TO BE ARCHITECTURAL BROWN AND IS TO BE SUPPLIED WITH LOWERING WENCH.

LUMINAIRE – GE PART = M2RR–15S1A2L–MN4
BRACKET – GE PART = R8SU2H6PP
POLE – GE PART = ASHTS202T–5.3–11PP

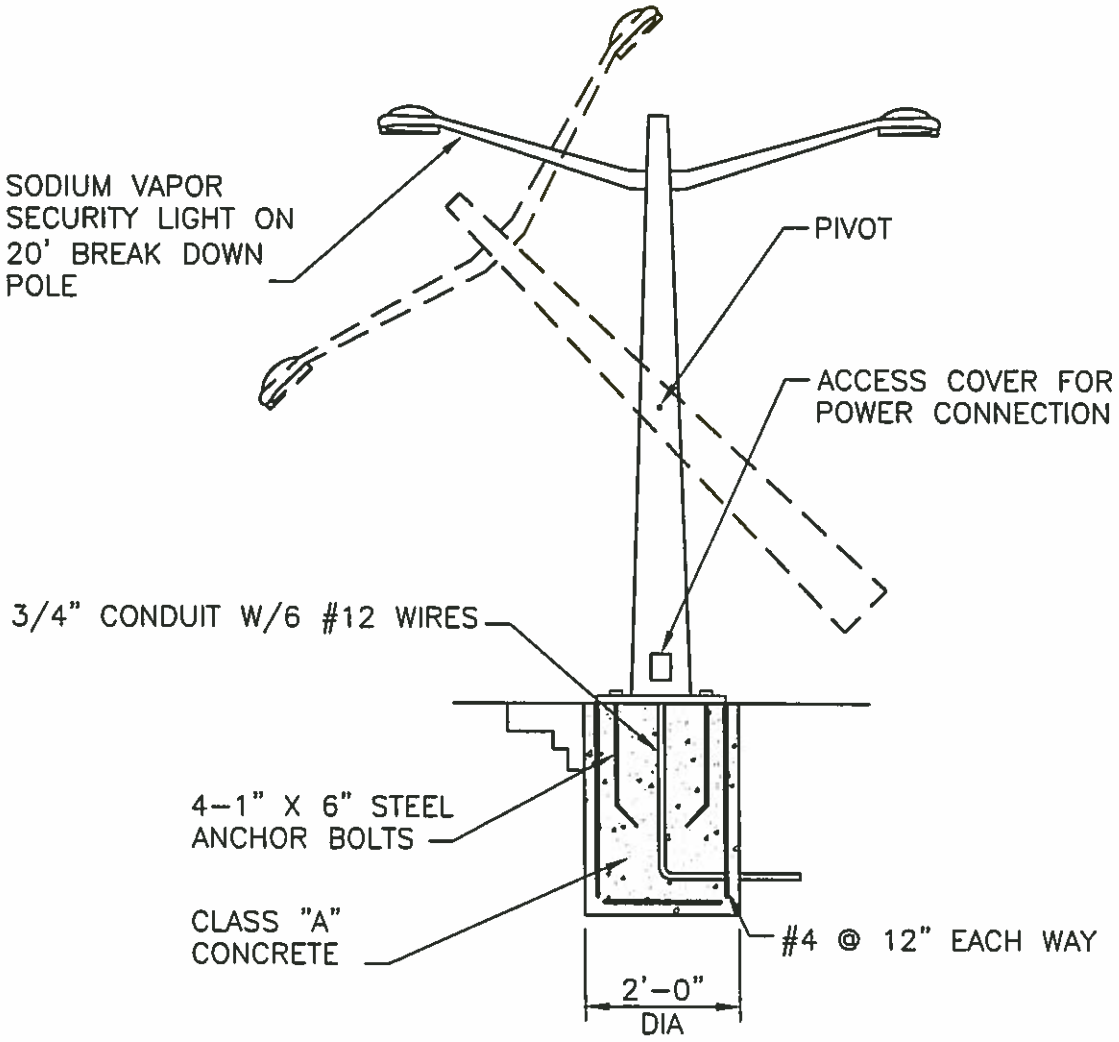

DEKALB COUNTY, GA. Department of Watershed Management	**STANDARD DETAILS**	08-08
	Light Pole Detail	
	NOT TO SCALE	DETAIL NO. P-006