COUNTY	PROJECT NUMBER	SHEET NO.	TOTAL SHEETS
DEKALB	0012613	1	73

DEPARTMENT OF TRANSPORTATION
DEKALB COUNTY

PLAN OF PROPOSED

BRIDGE REHABILITATION PROJECT
CR 5149 (CONSTITUTION ROAD) & CS 78 (KEY ROAD)
OVER INTRENCHMENT CREEK

P.I. NO. 0012613

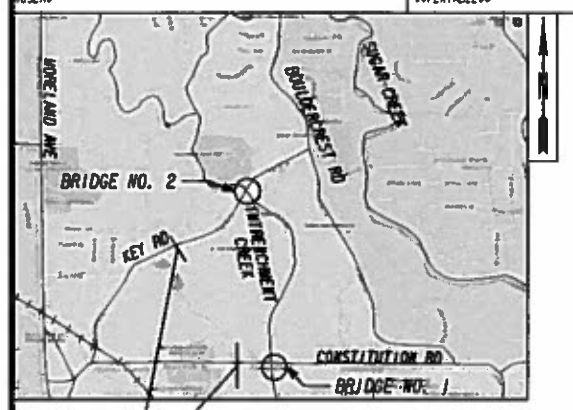

APPROXIMATE LOCATION OF TRANSMISSION LINES

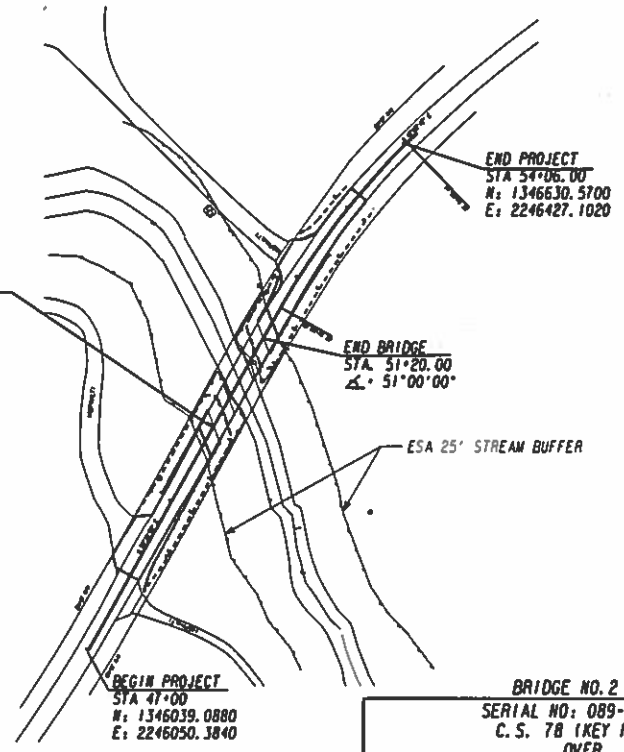

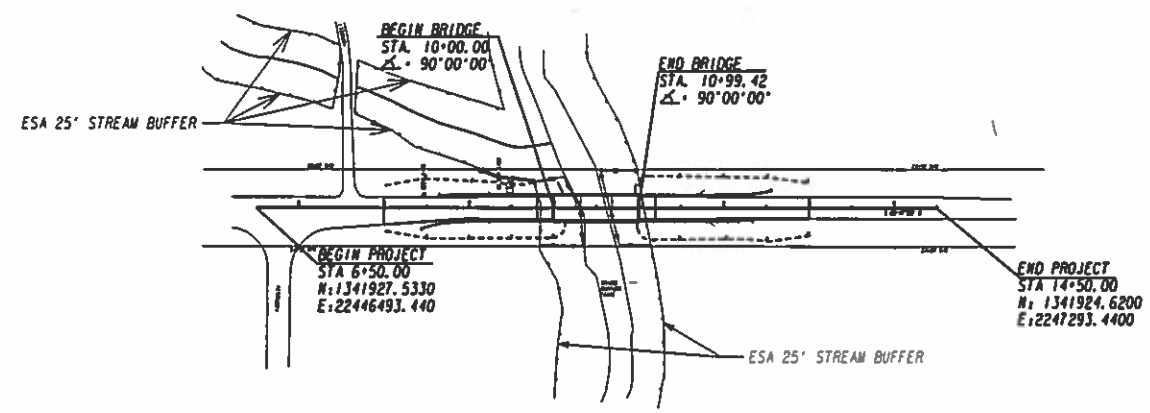

BRIDGE NO. 2
SERIAL NO: 089-0151-0
C.S. 78 (KEY ROAD)
OVER
INTRENCHMENT CREEK
ID # 089-09120W-001.10N
FEDERAL ROUTE : 09120
STATE ROUTE : NA
ADT = 950 vpd (2015)
POSTED SPEED = 35 MPH
DESIGN SPEED = 35 MPH
FUNCTIONAL CLASS: URBAN MAJOR COLLECTOR

APPROX. PROJ. MIDPOINT
N 1346351.958
E 2246228.466

BRIDGE NO. 1
SERIAL NO: 089-0149-0
C.R. 5149 (CONSTITUTION ROAD)
OVER
INTRENCHMENT CREEK
ID # 089-09082W-000.74E
FEDERAL ROUTE : 09082
STATE ROUTE : NA
ADT = 4450 vpd (2015)
POSTED SPEED = 45 MPH
DESIGN SPEED = 45 MPH
FUNCTIONAL CLASS: URBAN MINOR ARTERIAL

APPROX. PROJ. MIDPOINT
N 1341926.078
E 2246893.393

SCALE IN FEET
0 100 200 400

NOTES :

1. THE DATA, TOGETHER WITH ALL OTHER INFORMATION SHOWN ON THESE PLANS OR IN ANY WAY INDICATED THEREBY, WHETHER BY DRAWINGS OR NOTES, OR IN ANY OTHER MANNER, ARE BELIEVED TO BE INDICATIVE OF ACTUAL CONDITIONS. HOWEVER, THE SAME ARE SHOWN AS INFORMATION ONLY, ARE NOT GUARANTEED, AND DO NOT BIND DEKALB COUNTY OR THE DEPARTMENT OF TRANSPORTATION IN ANY WAY. THE ATTENTION OF BIDDER IS SPECIFICALLY DIRECTED TO SUBSECTION 102.04, 102.5, AND 104.3 OF THE SPECIFICATIONS.
2. ALL WORK TO BE DONE IN ACCORDANCE WITH THE STANDARD SPECIFICATIONS OF THE DEPARTMENT OF TRANSPORTATION OF GEORGIA, CURRENT EDITION.
3. ALL REFERENCES IN THIS DOCUMENT, WHICH INCLUDES ALL PAPERS, WRITINGS, DOCUMENTS, DRAWINGS, OR PHOTOGRAPHS USED, OR TO BE USED IN CONNECTION WITH THIS DOCUMENT, TO :STATE HIGHWAY DEPARTMENT OF GEORGIA", "STATE HIGHWAY DEPARTMENT", "GEORGIA STATE HIGHWAY DEPARTMENT", "HIGHWAY DEPARTMENT", OR "DEPARTMENT" WHEN THE CONTEXT THEREOF MEANS THE STATE HIGHWAY DEPARTMENT OF GEORGIA, AND SHALL BE DEEMED TO MEAN THE DEPARTMENT OF TRANSPORTATION.

PROJECT IS LOCATED IN
LAND LOTS 78, 79, 82, 83, 111
LAND DISTRICT 15
DEKALB COUNTY, GEORGIA

LENGTH OF PROJECT COUNTY NO.: 089	BR. NO. 1 DEKALB CO. 089-0149-0	BR. NO. 2 DEKALB CO. 089-0151-0	TOTAL PROJECT
	MILES	MILES	MILES
NET LENGTH OF ROADWAY	0.076	0.075	0.151
NET LENGTH OF BRIDGES	0.019	0.023	0.042
NET LENGTH OF PROJECT	0.095	0.098	0.193
NET LENGTH OF EXCEPTIONS	0.000	0.000	0.000
GROSS LENGTH OF PROJECT	0.095	0.098	0.193

THIS PROJECT IS LOCATED: 100% IN DEKALB COUNTY
THIS PROJECT IS LOCATED: 100% IN CONGRESSIONAL DISTRICT 5.
PROJECT DESIGNATION: EXEMPT

GEORGIA REGISTERED No. 2066 PROFESSIONAL ENGINEER GARRICK LEE EDWARDS

AECOM

PREPARED BY: _____ DESIGN DATE

RECOMMENDED FOR SUBMISSION BY: _____ DESIGN DATE

SUBMITTED BY: _____ STATE DESIGN ENGINEER

DATE CHIEF ENGINEER

PLANS COMPLETED: 05/30/2014

REVISION

DWG. NO. 01-001

COUNTY	PROJECT NUMBER	SHEET NO.	TOTAL SHEETS
DEKALB	0012613	2	73

SHT. NO.	DRAWING NO.	DESCRIPTION
1	01-001	COVER
2	02-001	INDEX
3	03-001	REVISION SUMMARY
4-5	04-001 - 04-002	GENERAL NOTES
6	05-001	TYPICAL SECTIONS
7-8	06-001 - 06-002	SUMMARY OF QUANTITIES
9	07-001	QUANTITIES (AMENDMENT)
10	08-001	QUANTITIES (CONSTRUCTION)
11-12	13-001 - 13-002	MAINLINE PLAN
13-14	20-001 - 20-002	DETOUR PLANS
15-17	24-000 - 24-002	UTILITY PLANS
18-19	26-001 - 26-002	SIGNING AND MARKING PLANS
20-32	35-001 - 35-013	BRIDGE PLANS
33	40-001	CONSTR DETAILS - (W-2) SUBBASES FOR APPROACH SLABS (03-06)
34	40-002	CONSTR DETAILS - (T-01) SIGN PLATES (01-00)
35	40-003	CONSTR DETAILS - (T-02) DETAILS FOR TYPICAL FRAMING (03-00)
36	40-004	CONSTR DETAILS - (T-03a) TYPE 7, 8 AND 9 SQUARE TUBE POST INSTALLATION DETAIL (07-02)
37	40-005	CONSTR DETAILS - (T-11A) DETAILS OF PAVEMENT MARKING PLACEMENT ON NON-LIMITED ACCESS ROADWAY (01-00)
38	40-006	CONSTR DETAILS - (T-15a) DETAILS OF RAISED PAVEMENT MARKER LOCATION NON-LIMITED ACCESS ROADWAY (01-04)
39	40-007	CONSTR DETAILS - (T-15C) MARKERS (09-11)
40	41-001	GA STD 3054 - END POST AND END POST GUARDRAIL ATTACHMENT DETAIL (09-02)
41	41-002	GA STD 3901 - BAR BENDING DETAILS (08-69)
42	41-003	GA STD 4000W- GUARDRAIL WARRANT GUIDES (09-07)
43	41-004	GA STD 4270 - "T" BEAM GUARDRAIL (11-99)
44	41-005	GA STD 4380 - "W" BEAM 31 INCH GUARDRAIL (08-11)
45	41-006	GA STD 4381 - POST AND OFFSET BLOCKS FOR "W" AND "T" BEAM 31 INCH GUARDRAIL (10-14
46	41-007	GA STD 4382 - GUARDRAIL CONNECTION AT BRIDGE END OR AT CONCRETE BARRIER END FOR 31 IN GUARDRAIL (08-11)
47	41-008	GA STD 4383 - GUARDRAIL ANCHORAGE TYPE 1 31 INCH GUARDRAIL HEIGHT (08-11)
48	41-009	GA STD 4384 - TYPE 12 31 INCH GUARDRAIL HEIGHT (08-11)
49	41-010	GA STD 4385 - "T" BEAM GUARDRAIL CONNECTION TO 31 INCH HEIGHT "W" BEAM (08-11)
50	41-011	GA STD 4388 - GUARDRAIL LOCATION DETAILS FOR UNDIVIDED HIGHWAYS AND ROADS (WITH SHOULDERS ADJACENT
		TO ROADWAY) 31 INCH GUARDRAIL HEIGHT (08-11)
51	41-012	GA STD 90170- REINFORCED CONCRETE APPROACH SLAB - 20FT LENGTH (02-90)
52	41-013	GA STD 9037 - TYPICAL FILL DETAIL AT END OF BRIDGE (09-99)
53	41-014	GA STD 9100 - TRAFFIC CONTROL GEN. NOTES, STD. LEGEND, MISC. DETAILS (03-06)
54	41-015	GA STD 9102 - TRAFFIC CONTROL DETAIL FOR LANE CLOSURE ON TWO-LANE HIGHWAY(03-06)
55	44-001	UTILITY RELOCATION PLANS
56	51-001	BMP GENERAL NOTES
57	52-001	CONSTR DETAILS - (EC-L1) EROSION CONTROL LEGEND AND UNIFORM CODE SHEET (SHEET 1 OF 6) (01-13)
58	52-002	CONSTR DETAILS - (EC-L2) EROSION CONTROL LEGEND AND UNIFORM CODE SHEET (SHEET 2 OF 6) (01-13)
59	52-003	CONSTR DETAILS - (EC-L3) EROSION CONTROL LEGEND AND UNIFORM CODE SHEET (SHEET 3 OF 6) (01-13)
60	52-004	CONSTR DETAILS - (EC-L4) EROSION CONTROL LEGEND AND UNIFORM CODE SHEET (SHEET 4 OF 6) (01-13)
61	52-005	CONSTR DETAILS - (EC-L5) EROSION CONTROL LEGEND AND UNIFORM CODE SHEET (SHEET 5 OF 6) (01-13)
62	52-006	CONSTR DETAILS - (EC-L6) EROSION CONTROL LEGEND AND UNIFORM CODE SHEET (SHEET 6 OF 6) (01-13)
63-64	54-001 - 54-002	BMP LOCATION DETAILS
65	56-001	CONSTR DETAILS - (D-24A) TEMPORARY SILT FENCE (SHEET 1 OF 4) (01-11)
66	56-002	CONSTR DETAILS - (D-24B) TEMPORARY SILT FENCE BERM DITCH, INSTALLATION, BRUSH BARRIER (SHEET 2 OF 4) (01-11)
67	56-003	CONSTR DETAILS - (D-24C) TEMPORARY SILT FENCE J-HOOKS, INLET SEDIMENT TRAPS (SHEET 3 OF 4) (01-11)
68	56-004	CONSTR DETAILS - (D-35) PERMANENT SOIL REINFORCING MAT (TURF REINFORCING MAT) INSTALLATION ON DITCHES (01-11)
69	56-005	CONSTR DETAILS - (D-41) CONSTRUCTION EXIT (01-11)

SHT. NO.	DRAWING NO.	DESCRIPTION

AECOM

REVISION DATES

DEKALB COUNTY
DEPARTMENT OF TRANSPORTATION

INDEX

CONSTITUTION ROAD AND KEY ROAD
BRIDGES OVER INTRENCHMENT CREEK

DRAWING NO. 02-001

COUNTY	PROJECT NUMBER	SHEET NO.	TOTAL SHEETS
DEKALB	0012613	3	73

DATE	SHEET NO.	REVISION

DATE	SHEET NO.	REVISION

AECOM

REVISION DATES		

DEKALB COUNTY
DEPARTMENT OF TRANSPORTATION

REVISION SUMMARY

CONSTITUTION ROAD AND KEY ROAD
BRIDGES OVER INTRENCHMENT CREEK

DRAWING NO. 03-001

1. THE FOLLOWING UTILITIES HAVE FACILITIES IN THE PROJECT AREA:

   COMMUNICATIONS - COMCAST

   ELECTRICITY - GEORGIA POWER

   TELEPHONE - AT&T (F.K.A. BELLSOUTH)

   GAS - AGL RESOURCES (F.K.A. ATLANTA GAS LIGHT)

   WATER & SEWER - DEKALB COUNTY DEPARTMENT OF WATERSHED MANAGEMENT

   DATA GATHERING - USGS WATER DATA & CITY OF ATLANTA

2. WHERE CONTRACT DOCUMENTS REFERENCE "THE DEPARTMENT" OR "GA DEPARTMENT OF TRANSPORTATION", IT SHALL MEAN "DEKALB COUNTY."

3. UNLESS OTHERWISE NOTED, PERFORM ALL WORK IN ACCORDANCE WITH GEORGIA DEPARTMENT OF TRANSPORTATION STANDARDS AND SPECIFICATIONS.

4. ANY SIGN THAT MAY BE DISTURBED OR REMOVED DURING CONSTRUCTION OR THAT BECOMES TOO CLOSE TO THE NEW EDGE OF PAVEMENT SHALL BE REMOVED AND REPLACED WITH NEW SIGN AND POST REPLACED PER GA. DETAILS T-2 AND T-3A. INTRENCHMENT CREEK WARNING SIGNS AND ATLANTA POLICE ACADEMY SIGN, IF IMPACTED, TO BE REMOVED AND RESET. NO SEPERATE PAYMENT WILL BE MADE FOR RESETTING. COST TO BE INCLUDED IN GRADING COMPLETE.

5. NOTICE OF INTENT IS NOT REQUIRED. DISTURBED AREA FOR KEY ROAD IS 0.47 ACRE
   DISTURBED AREA FOR CONSTITUTION ROAD IS 0.66 ACRE

6. ALL WORK SHALL BE COMPLETED WITHIN THE EXISTING RIGHT-OF-WAY.

7. ALL BORROW AND WASTE SITES FOR THIS PROJECT SHALL BE ENVIRONMENTALLY APPROVED PRIOR TO CONSTRUCTION ACTIVITIES OCCURRING IN THEM. ALL COMMON FILL OR EXCESS MATERIAL DISPOSED OUTSIDE THE PROJECT RIGHT OF WAY SHALL BE PLACED IN EITHER A PERMITTED SOLID WASTE FACILITY, A PERMITTED INSERT WASTE LANDFILL OR IN AN ENGINEERED FILL; SEE SECTION 201 OF THE STANDARD SPECIFICATION AND SUPPLEMENT THERETO FOR ADDITIONAL INFORMATION.

8. THE CONTRACTOR SHALL REPLACE IN KIND ANY VEGETATION OR LANDSCAPING DAMAGED DURING CONSTRUCTION. COST SHALL BE INCLUDED IN THE LUMP SUM PRICE FOR GRADING COMPLETE.

9. THERE IS NO SUITABLE PLACE TO BURY EXISTING BRIDGE/CONSTRUCTION DEBRIS WITHIN THE PROJECT'S LIMITS. THE CONTRACTOR SHALL PROVIDE AN ENVIRONMENTALLY APPROVED SITE TO DISPOSE OF EXISTING BRIDGE/CONSTRUCTION DEBRIS AT NO ADDITIONAL COST TO THE DEPARTMENT.

10. THE COST FOR GUARDRAIL REMOVAL AND ANY GRADING REQUIRED FOR NEW GUARDRAIL SHALL BE INCLUDED IN THE LUMP SUM PRICE FOR GRADING COMPLETE.

11. ALL DETOURS, LANE CLOSURES, AND TRAFFIC CONTROL SHALL BE COORDINATED WITH DEKALB COUNTY AND SHALL BE FURNISHED, INSTALLED, AND MAINTAINED IN ACCORDANCE WITH GEORGIA STANDARD SPECIFICATIONS, APPLICABLE GEORGIA STANDARDS AND THE MUTCD. COST FOR THIS WORK SHALL BE INCLUDED IN THE LUMP SUM PRICE FOR TRAFFIC CONTROL.

12. INCLUDE THE COST FOR FURNISHING AND INSTALLING WATER MAIN HANGER ASSEMBLIES IN THE PRICE BID FOR PAY ITEM 670 - WATER MAIN.

13. THERE HAS BEEN NO SUE INVESTIGATION COMPLETED ON THIS PROJECT. ALL UTILITY LOCATIONS SHOWN ON PLANS ARE FROM TOPOGRAPHIC FIELD SURVEY AND/OR UTILITY COORDINATION.

14. CONTRACTOR TO MAINTAIN ACCESS TO ALL DRIVEWAYS DURING ROAD CLOSURE.

15. USGS MONITORING STATION WILL BE RELOCATED BY USGS. IF THE MONITORING STATION HASN'T BEEN RELOCATED PRIOR TO CONSTRUCTION, THE CONTRACTOR IS RESPONSIBLE FOR COORDINATING WITH USGS. USGS REQUIRES A SIX WEEK NOTICE FOR RELOCATION.

16. NO 404 PERMIT, THEREFORE NO WORK TO BE CONDUCTED IN THE STREAM. ALL ESA'S OUTLINED IN ERIT TABLE.

17. ALL KNOWN UTILITY FACILITIES ARE SHOWN SCHEMATICALLY ON PLANS, AND ARE NOT NECESSARILY ACCURATE IN LOCATION AS TO PLAN OR ELEVATION. UTILITY FACILITIES SUCH AS SERVICE LINES OR UNKNOWN FACILITIES NOT SHOWN ON PLANS WILL NOT RELIEVE THE CONTRACTOR OF THEIR RESPONSIBILITY UNDER THIS REQUIREMENT. "EXISTING UTILITY FACILITIES" MEANS ANY UTILITY THAT EXISTS ON THE PROJECT IN ITS ORIGINAL, RELOCATED OR NEWLY INSTALLED POSITION.

GEORGIA811
Utilities Protection Center, Inc
Know what's below.
Call before you dig.

Environmental Resources Impact Table

These resources and the restrictions listed are governed by state and federal law

Resource Name (from Section A of the ECT)		Location: Beginning STA	Location: Ending STA	Location: Side	Permitted Construction Activity (from Section A of the ECT)	Special Provision? (from Section B of the ECT)	Comments (from Section C of the ECT, comments only)
A-1	Perennial Stream (PS) 01a	9+60	9+98	Both	No Activity		Designated as an Environmentally Sensitive Area
A-2	PS01a Buffer	9+23	11+27	"	Activities within 100 feet of the bridge over PS01A are exempt	-	Designated as an Environmentally Sensitive Area
A-3	PS01b	48+28	51+95	"	No Activity		Designated as an Environmentally Sensitive Area
A-4	PS01b Buffer	48+05	52+60	"	Activities within 100 feet of the bridge over PS01b are exempt	-	Designated as an Environmentally Sensitive Area
A-5	Intermittent Stream (IS) 02	6+50	9+98	LT	No Activity	-	Designated as an Environmentally Sensitive Area
A-6	IS02 Buffer	6+50	9+75	LT	No Activity	-	Designated as an Environmentally Sensitive Area
404 Permits and Variances (from Section D of the ECT)		No 404 Permit or Buffer Variance is required for this project.					
Other Commitments		Coordinate with USGS to relocate the Monitoring Station on Key Road.					

ECT - ENVIRONMENTAL COMMITMENTS TABLE, AKA "GREEN SHEET"

AECOM

REVISION DATES

DEKALB COUNTY
DEPARTMENT OF TRANSPORTATION

GENERAL NOTES

CONSTITUTION ROAD AND KEY ROAD
BRIDGES OVER INTRENCHMENT CREEK

DRAWING No. 04-001

GENERAL NOTES - STANDARD SIGNS

1. ALL STANDARD HIGHWAY SIGNS SHALL BE FABRICATED AND ERECTED IN ACCORDANCE WITH THE DETAILS SHOWN IN THE PLANS, THE MANUAL ON UNIFORM TRAFFIC CONTROL DEVICES, CURRENT EDITION, AND THE GEORGIA SPECIFICATIONS, SUPPLEMENTAL SPECIFICATIONS, AND/OR SPECIAL PROVISIONS.

2. SIGN ERECTION STATIONS ARE APPROXIMATE AND MAY BE ADJUSTED TO MEET FIELD CONDITIONS WHERE NECESSARY, BUT SHALL BE WITHIN THE LIMITATIONS SET FORTH IN THE MANUAL ON UNIFORM TRAFFIC CONTROL DEVICES, CURRENT EDITION. NO SIGN LOCATION SHALL BE CHANGED BY THE CONTRACTOR OR BY THE PROJECT ENGINEER WITHOUT PRIOR APPROVAL FROM THE OFFICE OF TRAFFIC OPERATIONS.

3. ALL STANDARD HIGHWAY SIGNS SHALL BE ERECTED AT A HEIGHT OF 7 FEET ABOVE THE NORMAL EDGE OF PAVEMENT TO THE BOTTOM OF THE SIGN OR ASSEMBLY.

4a. HORIZONTAL CLEARANCE FOR STANDARD HIGHWAY SIGNS ON INTERSTATE HIGHWAYS SHALL BE 32 FEET FROM THE NORMAL EDGE OF PAVEMENT TO THE NEARER EDGE OF THE SIGN(S), UNLESS SPECIFIED OTHERWISE IN THE PLANS. HORIZONTAL CLEARANCE FOR STANDARD HIGHWAY SIGNS ON RAMPS SHALL BE 2 FEET FROM THE NORMAL EDGE OF PAVED SHOULDER, OR EDGE OF GRADED SHOULDER WHEN PRESENT.

4b. HORIZONTAL CLEARANCE FOR STANDARD HIGHWAY SIGNS ON ALL OTHER ROADWAYS SHALL BE 6 FEET FROM THE EDGE OF THE PAVED SHOULDER OR 12 FEET FROM THE NORMAL EDGE OF PAVEMENT TO THE NEARER EDGE OF THE SIGN(S), WHICHEVER IS GREATER. THE HORIZONTAL CLEARANCE IN NON-MOUNTABLE CURB SECTIONS SHALL BE AT LEAST 2 FEET FROM THE CURB FACE TO THE NEARER EDGE OF THE SIGN(S).

4c. HORIZONTAL CLEARANCE FOR STANDARD HIGHWAY SIGNS MOUNTED BEHIND GUARDRAIL SHALL BE 6 FEET FROM THE FACE OF THE GUARDRAIL TO THE NEARER EDGE OF THE SIGN(S).

5. SINGLE PLATE, HORIZONTAL RECTANGULAR SIGNS OVER 48 INCHES IN WIDTH SHALL BE MOUNTED ON TWO POSTS WITH 2 EACH 2 INCH x ¼ INCH x (WIDTH OF SIGN) ALUMINUM OR GALVANIZED STEEL STRAPS. THE STRAPS SHALL BE FLUSH WITH THE BACK OF THE SIGN WITH ONE EACH ACROSS THE TOP AND BOTTOM OF THE SIGN. THE CENTERLINE OF EACH POST SHALL BE INSET 1/6TH OF THE SIGN WIDTH FROM THE EDGE OF THE SIGN. SIGN PLATE BOLT HOLES SHALL BE ⅜ INCH DIAMETER, DRILLED ORPUNCHED, AS SHOWN ON THE SIGN PLATE DETAILS.

6. EACH 42 OR 48 INCH WIDE x 18 OR 24 INCH HIGH SIGN REQUIRES ONE 2 INCH x ¼ INCH x (WIDTH OF SIGN) ALUMINUM OR GALVANIZED STEEL STRAP LOCATED IN THE CENTER OF THE SIGN AND FLUSH WITH THE BACK OF THE SIGN.

7. SIGN ASSEMBLIES SHALL BE MOUNTED ON ALUMINUM OR GALVANIZED STEEL STRAP FRAMES. FOR DETAILS AND STRAP SPECIFICATIONS REFER TO SIGN ASSEMBLY-TYPICAL FRAMING DETAILS.

8. TYPE 3 (HIGH INTENSITY) REFLECTIVE SHEETING SHALL BE USED FOR ALL STANDARD HIGHWAY SIGNS REQUIRING REFLECTORIZED BACKGROUNDS EXCEPT AS SPECIFIED BELOW OR SPECIFIED OTHERWISE IN THE PLANS. EITHER CLASS 1 OR CLASS 2 ADHESIVE BACKING IS PERMISSIBLE.

9. TYPE 11 (VERY HIGH INTENSITY) REFLECTIVE SHEETING SHALL BE USED FOR ALL RED SERIES SIGNS (R1-1, R1-2, R1-3P, R5-1, R5-1A, R5-1B).

10. TYPE 11 (VERY HIGH INTENSITY) FLUORESCENT YELLOW GREEN REFLECTIVE SHEETING SHALL BE USED FOR SCHOOL ZONE (S1-1, S2-1, S3-1, S4-3, AND THE TOP PORTION OF THE S5-1) SIGNS, BICYCLE CROSSING (W11-1) SIGNS, AND PEDESTRIAN CROSSING (W11-2 AND W11A-2) SIGNS. SIGNS WITHIN THE SAME ASSEMBLY AS THE SCHOOL ZONE SIGNS SPECIFICALLY LISTED ABOVE AND ALL REGULATORY SIGNS PLACED AS PART OF THE SCHOOL ZONE SIGNING SHALL HAVE TYPE 11 (VERY HIGH INTENSITY) REFLECTIVE SHEETING BACKGROUNDS OF THE APPROPRIATE COLOR.

11. TYPE 11 (VERY HIGH INTENSITY) FLUORESCENT YELLOW REFLECTIVE SHEETING SHALL BE USED FOR ALL WARNING SIGNS.

12. A 1"2 INCH MINIMUM AIR SPACE SHALL BE REQUIRED BETWEEN ALL SIGN PLATES WITHIN AN ASSEMBLY.

13. WHERE SIGNS WITHIN AN ASSEMBLY EXTEND BELOW THE STANDARD MOUNTING HOLES ON THE POST(S), ADDITIONAL ⅜ INCH DIAMETER HOLE(S), DRILLED OR PUNCHED, SHALL BE REQUIRED TO PROPERLY MOUNT THE ASSEMBLY.

14. INTERSTATE SHIELDS SHALL CONTAIN THE WORD GEORGIA. ALL INTERSTATE, U.S., AND GEORGIA SHIELDS REQUIRING ALT, BUS, CONN, LOOP, OR SPUR SHALL USE 4 INCH SERIES "D" LETTERS. REFER TO THE MANUAL ON UNIFORM TRAFFIC CONTROL DEVICES, CURRENT EDITION, FOR DETAILS.

15. FOR DETAILS OF SPECIAL DESIGN HIGHWAY SIGNS, SEE DETAILS OF MISCELLANEOUS SIGNS.

16. REFER TO PLAN SHEETS FOR LOCATION OF THE DISTRICT ENGINEERS OFFICE TO BE SHOWN ON ALL R552-1 (LIMITED ACCESS) SIGNS IN THIS PROJECT, IF ANY.

17. THE CONTRACTOR WILL, AS REQUESTED BY THE DISTRICT TRAFFIC OPERATIONS ENGINEER, BE REQUIRED TO REMOVE ANY EXISTING SIGNS THAT ARE DUPLICATED OR ARE CONTRARY TO THESE SIGN PLANS.

DRIVEWAY NOTE:

ALL DRIVEWAYS THAT ARE TO BE RECONSTRUCTED SHALL BE PLACED IN KIND I.E. ASPHALT FOR ASPHALT, CONCRETE FOR CONCRETE, AND AGGREGATE SURFACE COURSE FOR DIRT DRIVES. DRIVEWAY RELOCATIONS ARE SHOWN FROM THE BEST AVAILABLE DATA. THE CONTRACTOR SHALL CONSTRUCT NEW DRIVEWAYS TO MATCH THE ACTUAL FIELD LOCATION OF EXISTING DRIVEWAYS OR AS LOCATED IN THE PLANS. RESIDENTIAL DRIVES SHALL BE 14 FEET WIDE AT THE THROAT UNLESS NOTED OTHERWISE IN THE PLANS. COMMERCIAL DRIVES SHALL BE 24 FEET WIDE UNLESS NOTED OTHERWISE IN THE PLANS. THE CONTRACTOR SHALL OBTAIN THE APPROVAL FROM THE ENGINEER PRIOR TO MAKING ANY REVISIONS TO LOCATION, WIDTH, AND/OR NUMBER OF DRIVES TO BE CONSTRUCTED. REQUIRED DRIVEWAY EASEMENTS NOT SHOWN ON THE PLANS SHALL BE ACQUIRED. DRIVES SHALL BE MILLED AND OVERLAYED IN THE SAME MANNER AS THE MAINLINE.

AECOM

REVISION DATES

DEKALB COUNTY
DEPARTMENT OF TRANSPORTATION

GENERAL NOTES

CONSTITUTION ROAD AND KEY ROAD
BRIDGES OVER INTRENCHMENT CREEK

DRAWING NO. 04-002

CPL#

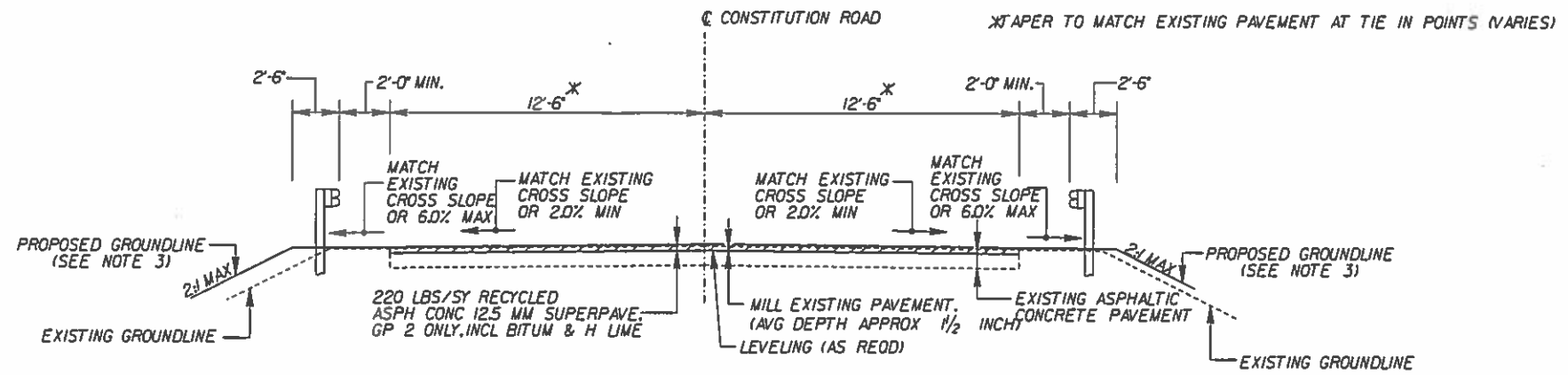

TS01 CONSTITUTION ROAD RESURFACING

ROADWAY: STA 8+00.00 TO 10+00.00
STA 10+99.42 TO 13+00.00

NOTES:

1. COST FOR SAWCUTTING EXISTING PAVEMENT SHALL BE INCLUDED IN GRADING COMPLETE.
2. CONTRACTOR SHALL ADJUST ROAD PROFILE TO MAKE A SMOOTH TRANSITION TO THE PROPOSED TOP OF DECK ELEVATION.
3. PROVIDE ADDITIONAL EMBANKMENT MATERIAL AT BRIDGE ENDS TO ACCOMODATE GUARDRAIL. INCLUDE COST FOR THIS WORK IN THE PRICE BID FOR GRADING COMPLETE.
4. SEE ROADWAY PLANS FOR LOCATION OF GUARDRAIL
5. CONTRACTOR TO USE EXTENDED POST GUARDRAIL (GDOT STD.4388) IN ORDER TO MINIMIZE FILL LIMITS. EXTEND POST TO BE INCLUDED IN PRICE BID FOR GUARDRAIL.

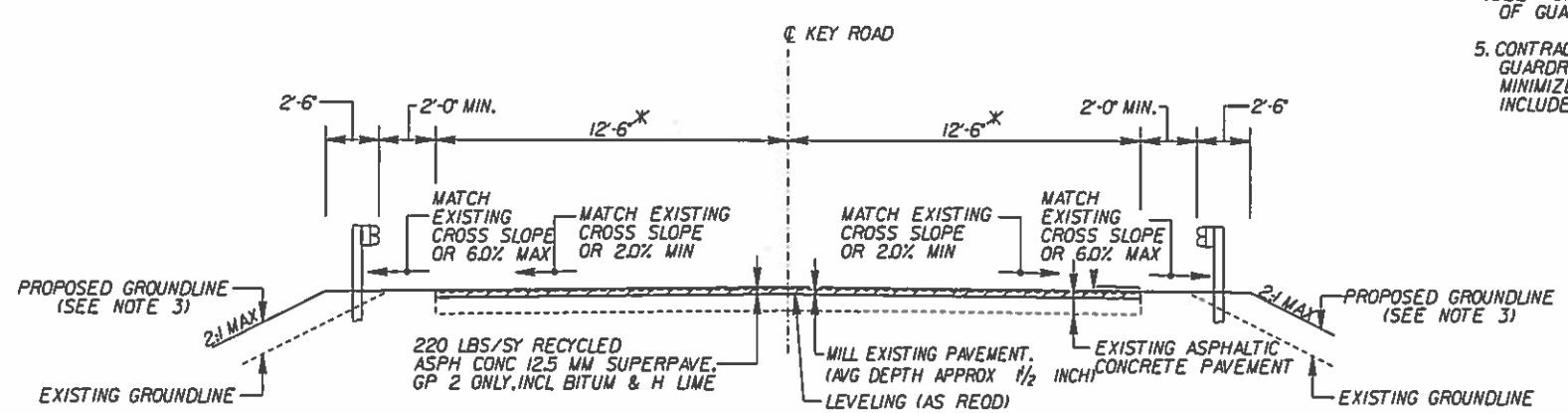

TS02 KEY ROAD RESURFACING

ROADWAY: STA 48+00.00 TO 50+00.00
STA 51+20.00 TO 53+20.00

AECOM

NOT TO SCALE

REVISION DATES		

DEKALB COUNTY
DEPARTMENT OF TRANSPORTATION

TYPICAL SECTIONS

CONSTITUTION ROAD AND KEY ROAD
BRIDGES OVER INTRENCHMENT CREEK

DRAWING NO. 05-001

TRAFFIC CONTROL
P. I. 0012613

TOTAL	LUMP SUM

GRADING COMPLETE
P. I. 0012613

TOTAL	LUMP SUM

MILL ASPH CONC PVMT, 1½ IN DEPTH

CONSTITUTION RD	1100
KEY RD RD	1250
TOTAL	2350 SQ YD

TO BE USED AT LOCATIONS SHOWN ON PLANS AND/OR AS DIRECTED BY ENGINEER. QUANTITY INCLUDES DRIVEWAYS.

REINFORCED CONCRETE APPROACH SLAB
GA. STD. 9017-Q

LOCATION	REINFORCED CONCRETE APPROACH SLAB INCL SLOPED EDGE & SUBBASE	CONCRETE SPILLWAY GA. STD. 9017-J	15" SLOPE DRAIN PIPE	CLASS B CONCRETE APRON	GROOVED CONCRETE
	SY	EACH	LIN. FT	CU. YDS	SY
CONSTITUTION RD					
9+80.00 - 10+00.00	70.38				70.38
10+99.42 - 11+19.42	70.38				70.38
TOTAL	141				141
KEY RD					
49+80.00 - 50+00.00	70.38				70.38
51+20.00 - 51+40.00	70.38				70.38
TOTAL	141				141
TOTALS	282				282

WATER MAIN - CONSTITUTION RD

PAY ITEM	DESCRIPTION	UNIT	TOTAL
615-1000	JACK OR BORE PIPE (16") - 0012613	LF	80
670-1080	WATER MAIN, 8 IN	LF	550
670-1900	INLINE PLUG - 0012613	EA	4
670-2002	VALVE MARKER	EA	6
670-2060	GATE VALVE, 6 IN	EA	1
670-2080	GATE VALVE, 8 IN	EA	2
670-3087	TAPPING SLEEVE & VALVE ASSEMBLY, 8 IN X 8 IN	EA	2
670-3167	TAPPING SLEEVE & VALVE ASSEMBLY, 16 IN X 8 IN	EA	2
670-4000	FIRE HYDRANT	EA	1
670-7000	STEEL CASING (16") - 0012613	LF	120
999-0050	LED DYNAMIC DELINEATION SYSTEM	LS	1

GUARDRAIL QUANTITIES
GA. STDS. 4380, 4381, 4382, 4384, 4385, 4388

GUARDRAIL LOCATION		SIDE	TP "W" LIN FT	TP "T" LIN FT	ANCHORAGES TP 12	ANCHORAGES TP 1
CONSTITUTION RD						
8+80.00 -	9+80.00	LT	100			1
9+80.00 -	10+00.65	LT		20.65		
8+80.00 -	9+80.00	RT	100		1	
9+80.00 -	10+00.65	RT		20.65		
10+98.35 -	11+19.00	LT		20.65		
11+19.00 -	12+19.00	LT	100		1	
10+98.35 -	11+19.00	RT		20.65		
11+19.00 -	12+19.00	RT	100			1
TOTAL			400	82.60	2	2
KEY RD						
49+18.00 -	49+93.00	LT	75			1
49+93.00 -	50+13.65	LT		20.65		
48+30.00 -	49+68.00	RT	138		1	
49+68.00 -	49+88.65	RT		20.65		
51+31.35 -	51+52.00	LT		20.65		
51+52.00 -	51+52.00	LT			1	
51+06.35 -	51+27.00	RT		20.65		
51+27.00 -	52+27.00	RT	100			1
TOTAL			313	82.60	2	2
AS DIRECTED BY ENGINEER			37	0.80		
TOTALS			750	166	4	4

SURFACING QUANTITIES

ITEMS	UNIT	BRIDGE NO. 1 CONSTITUTION ROAD			BRIDGE NO. 2 KEY ROAD			AS DIRECTED BY ENGINEER	TOTALS
				SURFACE			SURFACE		
RECYCLED ASPH CONC 12.5 MM SUPERPAVE, GP 2 ONLY, INCL BITUM & H LIME	TN			115			132	3	250
BITUM TACK COAT	GL			36			42	22	100
LEVELING	TN							50	50
PATCHING	TN							50	50

PAVEMENT MARKERS (EACH)

LOCATION	REFLECTIVE-RAISED YELLOW TYPE 1	CLEAR TYPE 2	CLEAR/RED TYPE 3
CONSTITUTION ROAD	12		
KEY ROAD	12		
AS DIRECTED	6		
TOTALS	30		

NOTE: PAVEMENT MARKERS SHALL BE SPACED 80 FEET APART.

AECOM

REVISION DATES

DEKALB COUNTY
DEPARTMENT OF TRANSPORTATION

SUMMARY QUANTITIES

CONSTITUTION ROAD AND KEY ROAD
BRIDGES OVER INTRENCHMENT CREEK

DRAWING NO. 06-001

TRAFFIC STRIPE

DESCRIPTION	UNIT	QUANTITY PREFORMED	QUANTITY THERMOPLASTIC
CONSTITUTION			
STA. 8+00 - 9+80			
5" SOLID WHITE	LIN FEET	0	360
5" SOLID YELLOW	LIN FEET	0	360
5" SKIP WHITE	GR LIN FT	0	100
STA. 9+80 - 11+20			
8" SOLID CONTRAST WHITE	LIN FEET	280	0
5" SOLID CONTRAST YELLOW	LIN FEET	280	0
STA. 11+20 - 13+00			
5" SOLID WHITE	LIN FEET	0	360
5" SOLID YELLOW	LIN FEET	0	260
5" SKIP YELLOW	GR LIN FT	0	100
TOTAL			
5" SOLID WHITE	LIN FEET	0	720
5" SOLID YELLOW	LIN FEET	0	620
5" SOLID CONTRAST YELLOW	LIN FEET	280	0
8" SOLID CONTRAST WHITE	LIN FEET	280	0
5" SKIP WHITE	GR LIN FT	0	100
5" SKIP YELLOW	GR LIN FT	0	100
KEY			
STA. 48+00 - 49+80			
5" SOLID WHITE	LIN FEET	0	360
5" SOLID YELLOW	LIN FEET	0	360
STA. 49+80 - 51+40			
8" SOLID CONTRAST WHITE	LIN FEET	320	0
5" SOLID CONTRAST YELLOW	LIN FEET	320	0
STA. 51+40 - 53+20			
5" SOLID WHITE	LIN FEET	0	360
5" SOLID YELLOW	LIN FEET	0	360
TOTAL			
5" SOLID WHITE	LIN FEET	0	720
5" SOLID YELLOW	LIN FEET	0	720
5" SOLID CONTRAST YELLOW	LIN FEET	320	0
8" SOLID CONTRAST WHITE	LIN FEET	320	0
5" SKIP WHITE	GR LIN FT	0	0
5" SKIP YELLOW	GR LIN FT	0	0
TOTALS			
5" SOLID WHITE	LIN FEET	0	1440
5" SOLID YELLOW	LIN FEET	0	1340
5" SOLID CONTRAST YELLOW	LIN FEET	600	0
8" SOLID CONTRAST WHITE	LIN FEET	600	0
5" SKIP WHITE	GR LIN FT	0	100
5" SKIP YELLOW	GR LIN FT	0	100

SUMMARY OF QUANTITIES-STANDARD SIGNS

STATION	INSTL. NO.	CODE	SIGNS (SQUARE FEET) TYPE 1 (0.08) SIZE	QUANTITY	TYPE 3 SHEETING SF	TYPE 11 SHEETING SF	TYPE 2 (0.10) SIZE	QUANTITY	SQUARE FEET	POST (LINEAR FEET) TYPE 7 LENGTH	QUANTITY	LINEAR FEET	TYPE 8 LENGTH	QUANTITY	LINEAR FEET
CONSTITUTION															
9+00 RT		W8-13	36"x36"	1		9.00				14	1	14			
12+00 LT		W8-13	36"x36"	1		9.00				14	1	14			
09+36 LT		R2-1	24"x36"	1		6.00				13	1	13			
10+00 LT		OW3-L	12"x36"	1		3.00									
10+00 RT		OW3-R	12"x36"	1		3.00									
10+99 LT		OW3-L	12"x36"	1		3.00									
10+99 RT		OW3-R	12"x36"	1		3.00									
TOTAL				7		36.00					3	41			
KEY															
49+00 RT		W8-13	36"x36"	1		9.00				14	1	14			
53+00 LT		W8-13	36"x36"	1		9.00				14	1	14			
50+12 RT		OW3-L	12"x36"	1		3.00									
49+88 LT		OW3-R	12"x36"	1		3.00									
51+32 RT		OW3-L	12"x36"	1		3.00									
51+08 LT		OW3-R	12"x36"	1		3.00									
TOTAL				6		30.00					2	28			
TOTAL				13		66.00					5	69			

NOTE: INTRENCHMENT CREEK WARNING SIGNS TO BE RESET AT BOTH SITES, AS SHOWN IN PLANS.

GRASSING

ITEM	UNIT	QUANTITY	AGRICULTURAL LIME TON	FERTILIZER MIXED GRADE TON	FERTILIZER NITROGEN CONTENT LB
CONSTITUTION RD					
PERMANENT GRASSING	AC	0.5	1	0.5	25
TEMPORARY GRASSING	AC	0.5		0.5	
KEY RD					
PERMANENT GRASSING	AC	0.5	1	0.5	25
TEMPORARY GRASSING	AC	0.5		0.5	
TOTAL			2	2	50

	TEMPORARY SILT FENCE, TYPE C	MAINTENANCE SILT FENCE TYPE C	CONSTRUCTION EXIT	MAINTENANCE CONSTRUCTION EXIT	MULCH	ORANGE BARRIER FENCE	EROSION CONTROL MATS (AS DIRECTED BY ENGINEER)
UNITS	LIN FT.	LIN FT.	EA.	EA.	TONS	LIN FT.	SQ. YDS.
CONSTITUTION RD	2100	1050	2	2	10	415	——
KEY RD RD	1800	900	2	2	10	385	——
TOTAL	3900	1950	4	4	20	800	2500

BRIDGE QUANTITIES - CONSTITUTION RD

PAY ITEM	DESCRIPTION	UNIT	TOTAL
500-0100	GROOVED CONCRETE	SY	305
500-2100	CONCRETE BARRIER	LF	188
500-3001	CLASS AA CONCRETE, HES	CY	95
500-3101	CLASS A CONCRETE	CY	1
501-3000	STR STEEL, BR NO-1	LB	7000
511-1000	BAR REINF STEEL	LB	24
511-3000	SUPERSTR REINF STEEL, BR NO - 1	LB	25300
518-1000	RAISE EXISTING BRIDGE, STA - 10+50	LS	LUMP
535-1105	PAINT EXIST STEEL TRUCTURE, BR ID - 089-09082M-000.74E	LS	LUMP
540-1202	REMOVAL OF PARTS OF EXISTING BR, BR NO - 1	LS	LUMP

BRIDGE QUANTITIES - KEY RD

PAY ITEM	DESCRIPTION	UNIT	TOTAL
500-0100	GROOVED CONCRETE	SY	365
500-1006	SUPERSTR CONCRETE, CL AA BR NO - 2	CY	116
500-2100	CONCRETE BARRIER	LF	228
500-3101	CLASS A CONCRETE	CY	32
501-3000	STR STEEL, BR NO-2	LB	9000
511-1000	BAR REINF STEEL	LB	2000
511-3000	SUPERSTR REINF STEEL, BR NO - 2	LB	30600
518-1000	RAISE EXISTING BRIDGE, STA - 50+60	LS	LUMP
535-1105	PAINT EXIST STEEL STRUCTURE, BR ID - 089-09120M-001.10N	LS	LUMP
540-1202	REMOVAL OF PARTS OF EXISTING BR, BR NO - 2	LS	LUMP
603-1224	STN GROUTED RIP RAP, 24 IN	SY	720
603-7000	PLASTIC FILTER FABRIC	SY	720

AECOM

REVISION DATES

DEKALB COUNTY
DEPARTMENT OF TRANSPORTATION

SUMMARY QUANTITIES

CONSTITUTION ROAD AND KEY ROAD
BRIDGES OVER INTRENCHMENT CREEK

DRAWING NO. 06-002

GPLN

QUANTITIES REQUIRED BY AMENDMENT

DATE	ITEM NO.	AMENDMENT DATE	AMENDMENT NUMBER	DESCRIPTION	UNIT	ORIGINAL QUANTITY	REQUIRED BY AMENDMENT QUANTITY

AECOM

REVISION DATES

DEKALB COUNTY
DEPARTMENT OF TRANSPORTATION

QUANTITIES
(AMENDMENT)

CONSTITUTION ROAD AND KEY ROAD
BRIDGES OVER INTRENCHMENT CREEK

DRAWING NO. 07-001

QUANTITIES REQUIRED ON CONSTRUCTION

DATE	ITEM NO.	AMENDMENT DATE	AMENDMENT NUMBER	DESCRIPTION	UNIT	ORIGINAL QUANTITY	REQUIRED BY AMENDMENT QUANTITY

AECOM

REVISION DATES

DEKALB COUNTY
DEPARTMENT OF TRANSPORTATION

QUANTITIES
(CONSTRUCTION)

CONSTITUTION ROAD AND KEY ROAD
BRIDGES OVER INTRENCHMENT CREEK

DRAWING No.
08-001

1/21/2016 8:02:59 AM
USER:Emily.Owen-EST
pplotborder-V81-PO.tbl
P:\Projects_Legacy\ATL-P_Drive\1528\60427168 Dekalb County\900-CAD-GIS\910 CAD_B\B\912 - BA02 KC\DGN\R01\07-900T17CP01.dgn

COUNTY	PROJECT NUMBER	SHEET NO.	TOTAL SHEETS
DEKALB	0012613	10	73

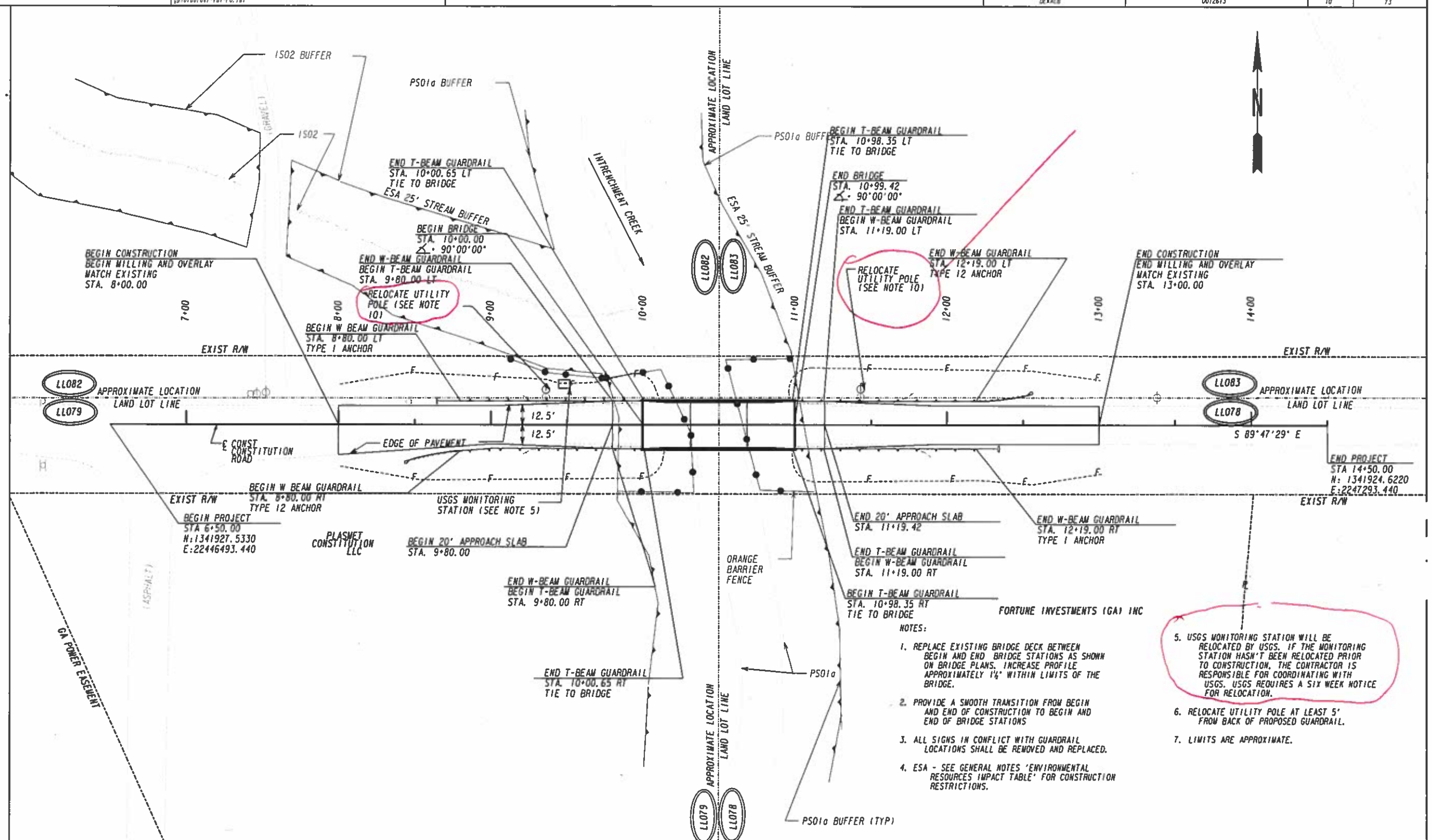

NOTES:

1. REPLACE EXISTING BRIDGE DECK BETWEEN BEGIN AND END BRIDGE STATIONS AS SHOWN ON BRIDGE PLANS. INCREASE PROFILE APPROXIMATELY 1½' WITHIN LIMITS OF THE BRIDGE.
2. PROVIDE A SMOOTH TRANSITION FROM BEGIN AND END OF CONSTRUCTION TO BEGIN AND END OF BRIDGE STATIONS
3. ALL SIGNS IN CONFLICT WITH GUARDRAIL LOCATIONS SHALL BE REMOVED AND REPLACED.
4. ESA - SEE GENERAL NOTES 'ENVIRONMENTAL RESOURCES IMPACT TABLE' FOR CONSTRUCTION RESTRICTIONS.
5. USGS MONITORING STATION WILL BE RELOCATED BY USGS. IF THE MONITORING STATION HASN'T BEEN RELOCATED PRIOR TO CONSTRUCTION, THE CONTRACTOR IS RESPONSIBLE FOR COORDINATING WITH USGS. USGS REQUIRES A SIX WEEK NOTICE FOR RELOCATION.
6. RELOCATE UTILITY POLE AT LEAST 5' FROM BACK OF PROPOSED GUARDRAIL.
7. LIMITS ARE APPROXIMATE.

PROPERTY AND EXISTING R/W LINE	BEGIN LIMIT OF ACCESS.....BLA
REQUIRED R/W LINE	END LIMIT OF ACCESS.....ELA
CONSTRUCTION LIMITS	LIMIT OF ACCESS
EASEMENT FOR CONSTR & MAINTENANCE OF SLOPES	R/W AND LIMIT OF ACCESS
EASEMENT FOR CONSTR OF SLOPES	EXISTING R/W LINE
EASEMENT FOR CONSTR OF DRIVES	ORANGE BARRIER FENCE

AECOM

SCALE IN FEET
0 30 60 120

REVISION DATES

DEKALB COUNTY
DEPARTMENT OF TRANSPORTATION

MAINLINE PLAN

CONSTITUTION ROAD
BRIDGE OVER INTRENCHMENT CREEK

DRAWING No. 13-001

1/21/2016 8:03:24 AM
USER:Emily.Duvon-EST
gplotborder-V8(-PO.1b)
P:\Projects_Legacy\ATL-P_Drive\528\60427168 Dekalb County\900-CAD-GIS\910 CAD_B16\912 - 9A02 KE\DGN\RDY\DF-9007ITCP02.dgn

COUNTY	PROJECT NUMBER	SHEET NO.	TOTAL SHEETS
DEKALB	0012613	11	13

POINT	NORTHING	EASTING	STA	OFFSET	ELEVATION
CP1	1346149.21	2246142.30	48+41	24.8'	815.45
CP2	1346446.85	2246250.90	51+56	27.1'	807.34

CURVE 1 DATA:
PI STA = 52+82.53
N: 1346545.342
E: 2246338.534
DELTA = 16°27'20" (RT)
D = 6°44'26.4"
T = 122.91'
L = 244.12'
R = 850.00'
E = 8.84'

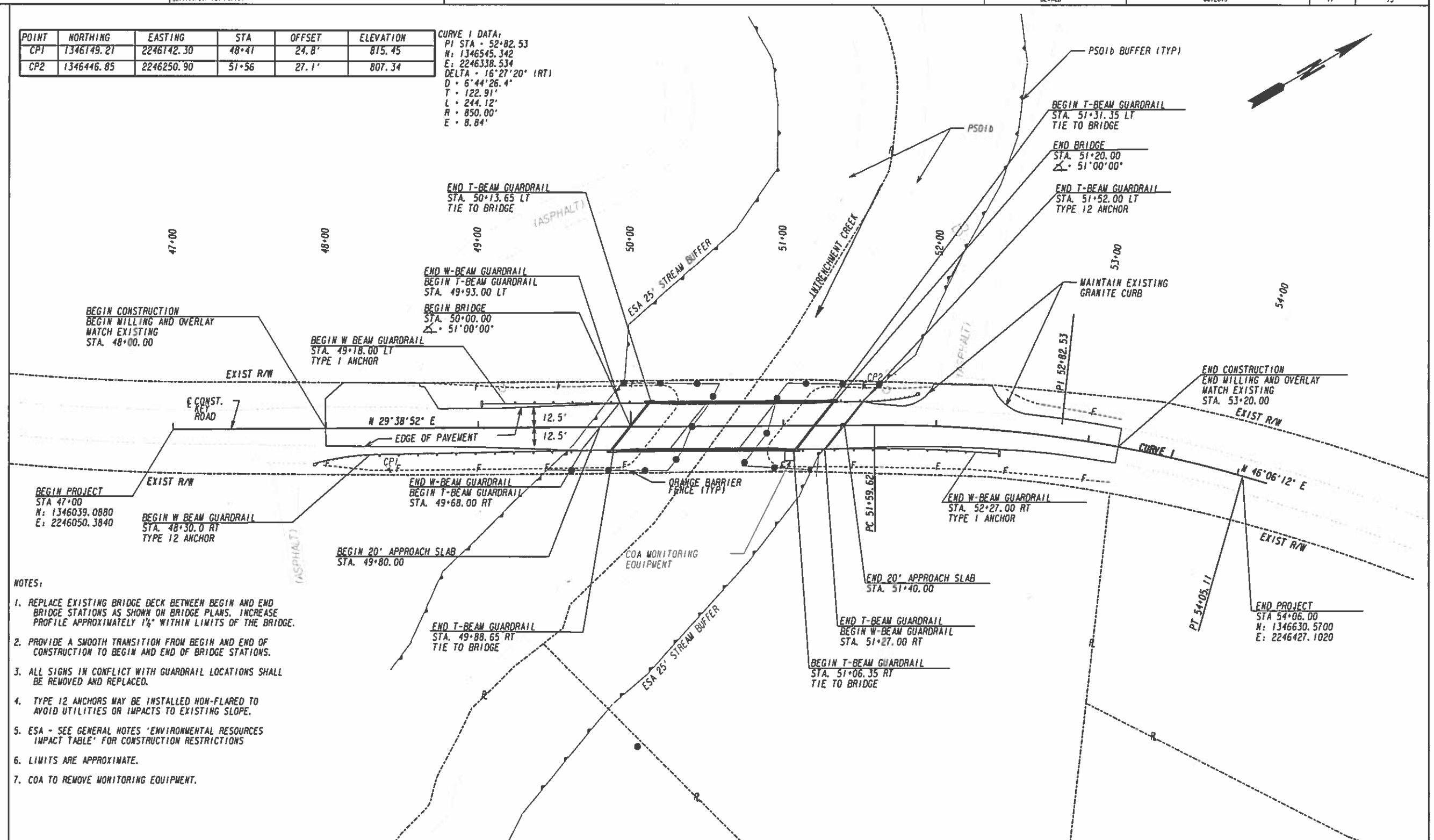

NOTES:

1. REPLACE EXISTING BRIDGE DECK BETWEEN BEGIN AND END BRIDGE STATIONS AS SHOWN ON BRIDGE PLANS. INCREASE PROFILE APPROXIMATELY 1½" WITHIN LIMITS OF THE BRIDGE.
2. PROVIDE A SMOOTH TRANSITION FROM BEGIN AND END OF CONSTRUCTION TO BEGIN AND END OF BRIDGE STATIONS.
3. ALL SIGNS IN CONFLICT WITH GUARDRAIL LOCATIONS SHALL BE REMOVED AND REPLACED.
4. TYPE 12 ANCHORS MAY BE INSTALLED NON-FLARED TO AVOID UTILITIES OR IMPACTS TO EXISTING SLOPE.
5. ESA - SEE GENERAL NOTES 'ENVIRONMENTAL RESOURCES IMPACT TABLE' FOR CONSTRUCTION RESTRICTIONS
6. LIMITS ARE APPROXIMATE.
7. COA TO REMOVE MONITORING EQUIPMENT.

PROPERTY AND EXISTING R/W LINE
REQUIRED R/W LINE
CONSTRUCTION LIMITS
EASEMENT FOR CONSTR & MAINTENANCE OF SLOPES
EASEMENT FOR CONSTR OF SLOPES
EASEMENT FOR CONSTR OF DRIVES

BEGIN LIMIT OF ACCESS.....BLA
END LIMIT OF ACCESS.....ELA
LIMIT OF ACCESS
R/W AND LIMIT OF ACCESS
EXISTING R/W LINE
ORANGE BARRIER FENCE

AECOM

SCALE IN FEET
0 30 60 120

REVISION DATES

DEKALB COUNTY
DEPARTMENT OF TRANSPORTATION

MAINLINE PLAN

KEY ROAD
BRIDGE OVER INTRENCHMENT CREEK

DRAWING NO. 13-002

12/22/2015 9:43:03 AM
USER:Emily.Owen-EST
gplotborder-V81-PO-detour.tbl
P:\Projects_Legacy\ATL-P_Drive\1528\60427168 Dekalb County\900-CAD-GIS\910 CAD_BIM\912 - ROAD KC\DGN\ROT\07-9007(75001).dgn

COUNTY	PROJECT NUMBER	SHEET NO.	TOTAL SHEETS
DEKALB	0012613		73

SIGN LEGEND

W20-2(1500)	DETOUR 500 FT
W20-2(1000)	DETOUR 1000 FT
W20-2(1500)	DETOUR 1500 FT
R11-2	ROAD CLOSED
R11-4	ROAD CLOSED TO THRU TRAFFIC
M4-9R	DETOUR
M4-9L	DETOUR
D-111	CONSTITUTION RD.
M4-8	DETOUR
M4-8a	END DETOUR
M4-10R	DETOUR
M4-10L	DETOUR
W20-3 (1500)	ROAD CLOSED 1500 FT
W20-3 (1000)	ROAD CLOSED 1000 FT
W20-3 (AHEAD)	ROAD CLOSED AHEAD

N

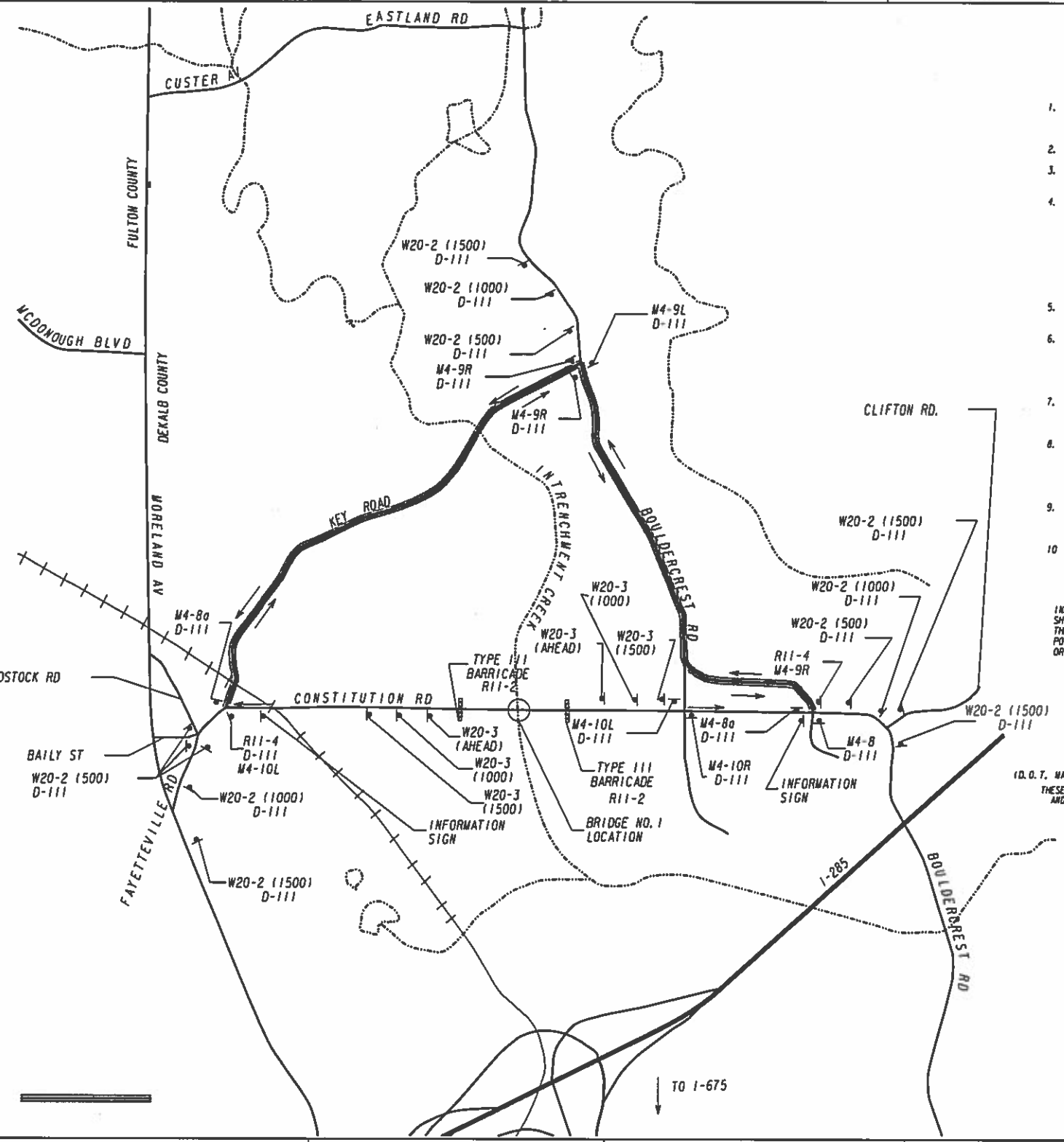

GENERAL NOTES
DETOUR SIGNING PLAN

1. ALL SIGNS AND PAVEMENT MARKINGS SHALL CONFORM TO THE MANUAL ON UNIFORM TRAFFIC CONTROL DEVICES (LATEST EDITION)
2. ALL SIGNS SHALL HAVE HIGH INTENSITY GRADE SHEETING (TP 11).
3. IN RESIDENTIAL AREAS, SIGNS SHALL BE LOCATED ON, OR AS CLOSE AS POSSIBLE TO, PROPERTY LINES.
4. EXISTING TRAFFIC SIGNS SHALL BE MAINTAINED BY THE CONTRACTOR THROUGHOUT CONSTRUCTION. MAINTENANCE INCLUDES REPLACING DAMAGED OR STOLEN SIGNS, AND PERIODIC CLEANING OF EXISTING SIGNS AND CONSTRUCTION RELATED TRAFFIC CONTROL DEVICES. DETOUR AND OTHER CLOSURE SIGNS/DEVICES SHALL BE INSTALLED SO AS TO BLOCK SIGHT OF EXISTING TRAFFIC SIGNS. THE COST FOR THIS WORK SHALL BE INCLUDED IN THE LUMP SUM PRICE FOR TRAFFIC CONTROL.
5. THE CONTRACTOR SHALL MAINTAIN INGRESS AND EGRESS TO DRIVEWAYS AT ALL TIMES.
6. THE DEPARTMENT OF TRANSPORTATION RESERVES THE RIGHT TO MODIFY THIS DETOUR PLAN AS FIELD CONDITIONS WARRANT. IF ADDITIONAL TRAFFIC CONTROL DEVICES ARE REQUIRED, THESE SHALL BE PROVIDED BY THE CONTRACTOR AT NO ADDITIONAL EXPENSE TO THE DEPARTMENT.
7. THE CONTRACTOR MUST OBTAIN A ROAD CLOSURE PERMIT FROM DEKALB D.O.T. A MINIMUM OF 21 DAYS PRIOR TO ROAD CLOSURE. FOR INFORMATION, CALL 404-297-3840.
8. ALL M4-9 SIGNS SHALL HAVE ADVISORY BLADES (INSTALLED ABOVE THE "DETOUR" SIGN) IDENTIFYING THE CLOSED STREET(S) THAT THE DETOUR ROUTE SERVES. THESE BLADES SHALL HAVE 4" SERIES "B" UPPER AND LOWER CASE LETTERING, AND SHALL BE "BLACK ON ORANGE".
9. ALL TRAFFIC CONTROL DEVICES SHALL BE MAINTAINED BY THE CONTRACTOR SO AS TO NOT INTERFERE WITH SIGHT DISTANCE FROM ANY ADJACENT SIDE ROAD OR DRIVEWAY.
10. REFLECTORIZED TYPE 3 BARRICADES SHALL BE USED AT THE ACTUAL LOCATION OF TOTAL STREET CLOSURE. EACH BARRICADE SHALL HAVE TWO TYPE "A" LIGHTS AND ONE R11-2 (ROAD CLOSED) SIGN ATTACHED.

INFORMATION SIGNS (INFORMING MOTORISTS OF THE ROAD CLOSURE) SHALL BE INSTALLED A MINIMUM OF 2 WEEKS PRIOR TO ROAD CLOSURE. THESE SIGNS SHALL BE INSTALLED AT OR NEAR AS POSSIBLE TO THE POINT OF ROAD CLOSURE OR THE BEGINNING OF THE DETOUR ROUTE, OR AS SHOWN ON APPROVED PLANS (SEE SPECIFICATIONS BELOW).

CONSTITUTION ROAD WILL BE
CLOSED TO THRU TRAFFIC
FROM KEY ROAD TO BOULDERCREST ROAD
BEGINNING (DATE)

(D.O.T. MAY REQUIRE MODIFICATION OF INFORMATION SIGNS AS NEEDED)

THESE SIGNS SHALL BE REFLECTIVE SHEETING WITH 4" BLACK UPPER AND LOWER CASE LETTERING (SERIES "B" OR WIDER) ON A WHITE BACKGROUND.

	DETOUR LENGTH	SPEED LIMIT
KEY RD	1.63 MILES	35 MPH
BOULDERCREST RD	1.46 MILES	35 MPH
TOTAL	3.09 MILES	——

AECOM

SCALE IN FEET
0 2000 4000 8000

REVISION DATES

DEKALB COUNTY
DEPARTMENT OF TRANSPORTATION

DETOUR PLAN

CONSTITUTION ROAD
BRIDGE OVER INTRENCHMENT CREEK

DRAWING NO.
20-001

12/22/2015 9:43:22 AM
USER:Cally.Duveneest
gpiotbordet-V8I-PO-detour.tbl
P:\Projects_Legacy\ATL-P_Drive\528\60427168 Cobb County\900-CAD-GIS\910 CAD_BIM\912 - WA02 RC\DGN\RDY\07-9007ITSD02.dgn

COUNTY	PROJECT NUMBER	SHEET NO.	TOTAL SHEETS
DEKALB	0012613	13	73

SIGN LEGEND

W20-2(500)	DETOUR 500 FT
W20-2(1000)	DETOUR 1000 FT
W20-2(1500)	DETOUR 1500 FT
R11-2	ROAD CLOSED
R11-4	ROAD CLOSED TO THRU TRAFFIC
M4-9R	DETOUR
M4-9L	DETOUR
D-111	KEY RD.
M4-8	DETOUR
M4-8a	END DETOUR
M4-10R	DETOUR
M4-10L	DETOUR
W20-3 (1500)	ROAD CLOSED 1500 FT
W20-3 (1000)	ROAD CLOSED 1000 FT
W20-3 (AHEAD)	ROAD CLOSED AHEAD

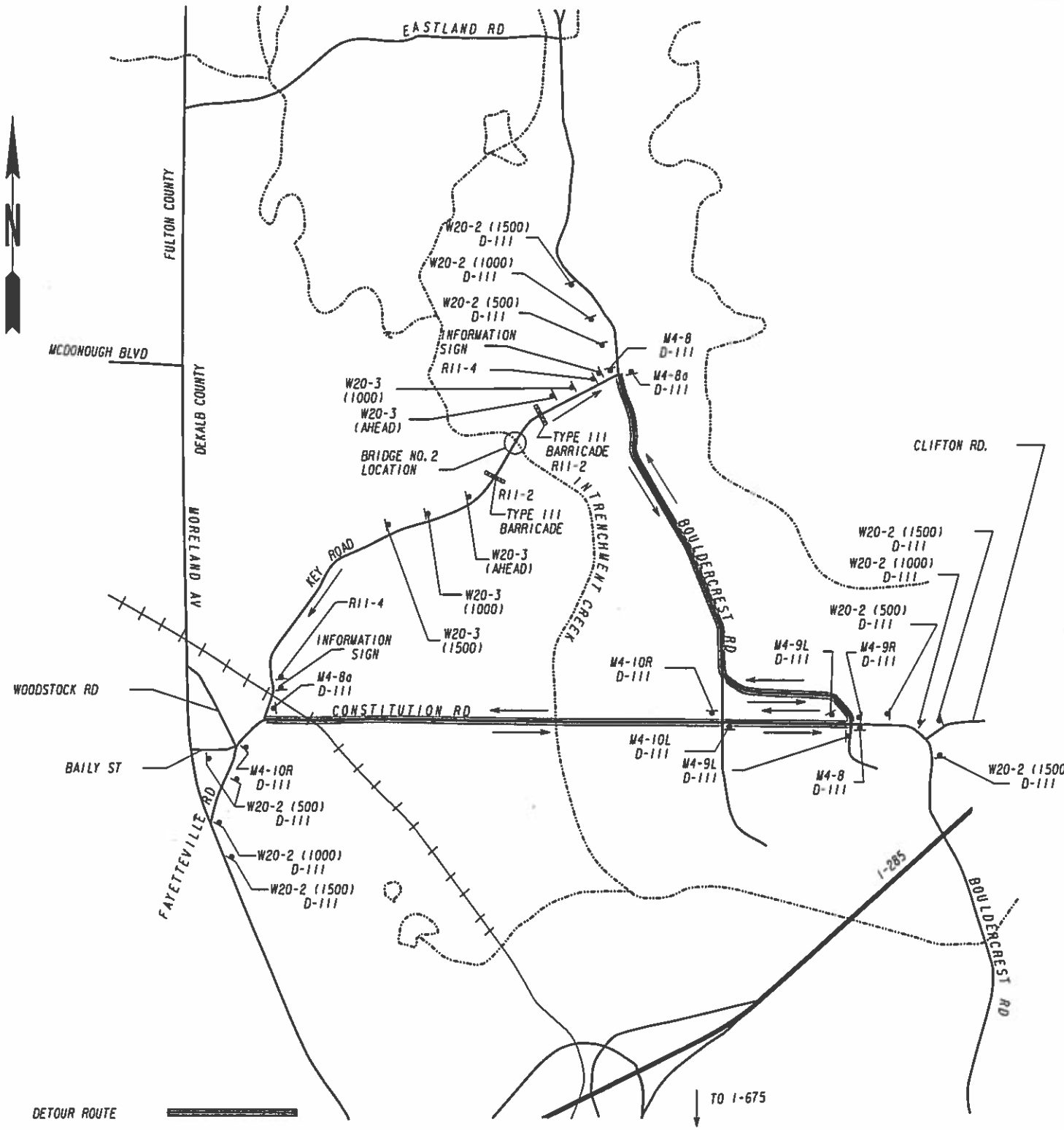

GENERAL NOTES
DETOUR SIGNING PLAN

1. ALL SIGNS AND PAVEMENT MARKINGS SHALL CONFORM TO THE MANUAL ON UNIFORM TRAFFIC CONTROL DEVICES (LATEST EDITION)
2. ALL SIGNS SHALL HAVE HIGH INTENSITY GRADE SHEETING (TP II).
3. IN RESIDENTIAL AREAS, SIGNS SHALL BE LOCATED ON, OR AS CLOSE AS POSSIBLE TO, PROPERTY LINES.
4. EXISTING TRAFFIC SIGNS SHALL BE MAINTAINED BY THE CONTRACTOR THROUGHOUT CONSTRUCTION. MAINTENANCE INCLUDES REPLACING DAMAGED OR STOLEN SIGNS, AND PERIODIC CLEANING OF EXISTING SIGNS AND CONSTRUCTION RELATED TRAFFIC CONTROL DEVICES. DETOUR AND OTHER CLOSURE SIGNS/DEVICES SHALL BE INSTALLED SO AS TO BLOCK SIGHT OF EXISTING TRAFFIC SIGNS. THE COST FOR THIS WORK SHALL BE INCLUDED IN THE LUMP SUM PRICE FOR TRAFFIC CONTROL.
5. THE CONTRACTOR SHALL MAINTAIN INGRESS AND EGRESS TO DRIVEWAYS AT ALL TIMES.
6. THE DEPARTMENT OF TRANSPORTATION RESERVES THE RIGHT TO MODIFY THIS DETOUR PLAN AS FIELD CONDITIONS WARRANT. IF ADDITIONAL TRAFFIC CONTROL DEVICES ARE REQUIRED, THESE SHALL BE PROVIDED BY THE CONTRACTOR AT NO ADDITIONAL EXPENSE TO THE DEPARTMENT.
7. THE CONTRACTOR MUST OBTAIN A ROAD CLOSURE PERMIT FROM DEKALB D.O.T. A MINIMUM OF 21 DAYS PRIOR TO ROAD CLOSURE. FOR INFORMATION, CALL 404-297-3840.
8. ALL M4-9 SIGNS SHALL HAVE ADVISORY BLADES (INSTALLED ABOVE THE "DETOUR" SIGN) IDENTIFYING THE CLOSED STREET(S) THAT THE DETOUR ROUTE SERVES. THESE BLADES SHALL HAVE 4" SERIES "B" UPPER AND LOWER CASE LETTERING, AND SHALL BE "BLACK ON ORANGE".
9. ALL TRAFFIC CONTROL DEVICES SHALL BE MAINTAINED BY THE CONTRACTOR SO AS TO NOT INTERFERE WITH SIGHT DISTANCE FROM ANY ADJACENT SIDE ROAD OR DRIVEWAY.
10. REFLECTORIZED TYPE 3 BARRICADES SHALL BE USED AT THE ACTUAL LOCATION OF TOTAL STREET CLOSURE. EACH BARRICADE SHALL HAVE TWO TYPE "A" LIGHTS AND ONE R11-2 (ROAD CLOSED) SIGN ATTACHED.

INFORMATION SIGNS (INFORMING MOTORISTS OF THE ROAD CLOSURE) SHALL BE INSTALLED A MINIMUM OF 2 WEEKS PRIOR TO ROAD CLOSURE. THESE SIGNS SHALL BE INSTALLED AT OR NEAR AS POSSIBLE TO THE POINT OF ROAD CLOSURE OR THE BEGINNING OF THE DETOUR ROUTE. OR AS SHOWN ON APPROVED PLANS (SEE SPECIFICATIONS BELOW).

KEY ROAD WILL BE
CLOSED TO THRU TRAFFIC
FROM CONSTITUTION ROAD TO BOULDERCREST ROAD
BEGINNING (DATE)

(D.O.T. MAY REQUIRE MODIFICATION OF INFORMATION SIGNS AS NEEDED)
THESE SIGNS SHALL BE REFLECTIVE SHEETING WITH 4" BLACK UPPER AND LOWER CASE LETTERING (SERIES "B" OR WIDER) ON A WHITE BACKGROUND.

	DETOUR LENGTH	SPEED LIMIT
CONSTITUTION RD	1.82 MILES	45 MPH
BOULDERCREST RD	1.46 MILES	35 MPH
TOTAL	3.28 MILES	—

AECOM

SCALE IN FEET
0 2000 4000 8000

REVISION DATES

DEKALB COUNTY
DEPARTMENT OF TRANSPORTATION

DETOUR PLAN

KEY ROAD
BRIDGE OVER INTRENCHMENT CREEK

DRAWING No. 20-002

GPLH

DATE/TIME$$$		DGN	COUNTY	PROJECT NUMBER	SHEET NO.	TOTAL SHEETS
$USER$	$$PENTABLE$$		DEKALB	0012613		73

UTILITY LINECODES

EXISTING OVERHEAD	OVERHEAD TO BE REMOVED	PROPOSED OVERHEAD	TYPE OF UTILITY
			ELECTRIC
			ELECTRIC/TELECOMMUNICATIONS
			ELECTRIC/CABLE TV
			ELECTRIC/TRAFFIC CONTROL
			ELECTRIC/TELECOMMUNICATIONS/CABLE TV
			ELECTRIC/TELECOMMUNICATIONS/CABLE TV/TRAFFIC CONTROL
			ELECTRIC/CABLE TV/TRAFFIC CONTROL
			ELECTRIC/TELECOMMUNICATIONS/TRAFFIC CONTROL
			GUY WIRE
			TELECOMMUNICATIONS
			TELECOMMUNICATIONS/TRAFFIC CONTROL
			TELECOMMUNICATIONS/CABLE TV/TRAFFIC CONTROL
			TELECOMMUNICATIONS/CABLE TV
			CABLE TV
			CABLE TV/TRAFFIC CONTROL
			TRAFFIC CONTROL

EXISTING UNDERGROUND	UNDERGROUND TO BE REMOVED	PROPOSED UNDERGROUND	TYPE OF UTILITY
			ELECTRIC (OL-D)
			TELECOMMUNICATIONS (OL-D)
			CABLE TV (OL-D)
			WATER (OL-D)
			STEAM (OL-D)
			SANITARY SEWER WITH FLOW DIRECTION (OL-D)
			SANITARY SEWER FORCE MAIN WITH FLOW DIRECTION (OL-D)
			GAS (OL-D)
			PETROLEUM (OL-D)
			TRAFFIC CONTROL (OL-D)

UTILITY SYMBOLS

EXISTING	PROPOSED	TEMPORARY	
			ELECTRIC MANHOLE
			HAND HOLE
			TRANSFORMER
			ELECTRIC METER
			UTILITY POLE/GUY POLE
			LIGHT POLE
			GUY ANCHOR
			ELECTRIC BOX
			MARKER
			TELECOMMUNICATIONS MANHOLE
			TELECOMMUNICATIONS PEDESTAL
			SPLICE BOX
SLC	SLC	SLC	SUBSCRIBER LOOP CARRIER (ORG "SLICK")
			CABINET
			PHONE BOOTH
			CABLE TV PEDESTAL
			CABLE TV MANHOLE
			WATER VALVE
			WATER METER
			WATER MANHOLE
			FIRE HYDRANT ASSEMBLY (INCLUDES ASSOCIATED VALVE)
BFP	BFP	BFP	BACKFLOW PREVENTER
PRV	PRV	PRV	PRESSURE INDICATOR VALVE
ARV	ARV	ARV	AIR RELEASE VALVE

EXISTING	PROPOSED	TEMPORARY	
			WELL
			WATER VAULT
			WATER VALVE MARKER
			STAND PIPE
			CLEANOUT
			SANITARY SEWER MANHOLE
ARV	ARV	ARV	AIR RELEASE VALVE
GT	GT	GT	GREASE TRAP
			SANITARY SEWER FORCE MAIN VALVE
			VENT
			GAS VALVE
			GAS METER
			GAS MANHOLE
GPR	GPR	GPR	GAS PRESSURE REGULATOR
			GAS VAULT
GTS	GTS	GTS	GAS TEST STATION
			PETROLEUM VALVE
			STRAIN POLE
			GASOLINE MONITORING WELL
			GASOLINE PUMP
			GASOLINE PUMP ISLAND
			GASOLINE FILLER VALVE

MISCELLANEOUS

- TH — TEST HOLE (QL-A ONLY)
- EOI — END OF INFORMATION
- QUALITY LEVEL (QL) DELINEATION
- 123 — POLE ID
- A01 — SANITARY SEWER MANHOLE (SSMH) ID

AECOM

REVISION DATES		

DEKALB COUNTY
DEPARTMENT OF TRANSPORTATION

UTILITY PLAN

CONSTITUTION ROAD AND KEY ROAD
BRIDGES OVER INTRENCHMENT CREEK

DRAWING No. 24-000

1/21/2016 8:03:26 AM
USER:Emily.Owen
gplotborder-V81-PO-ul11111es-black.tbl
P:\Projects_Legacy\ATL-P_Drive\1528\60427168 Dekalb County\900-CAD-GIS\910 CAD_BIM\912 - WA02 KC\DGN\RDY\07 900717UT01.dgn

COUNTY	PROJECT NUMBER	SHEET NO.	TOTAL SHEETS
DEKALB	0012613	14	73

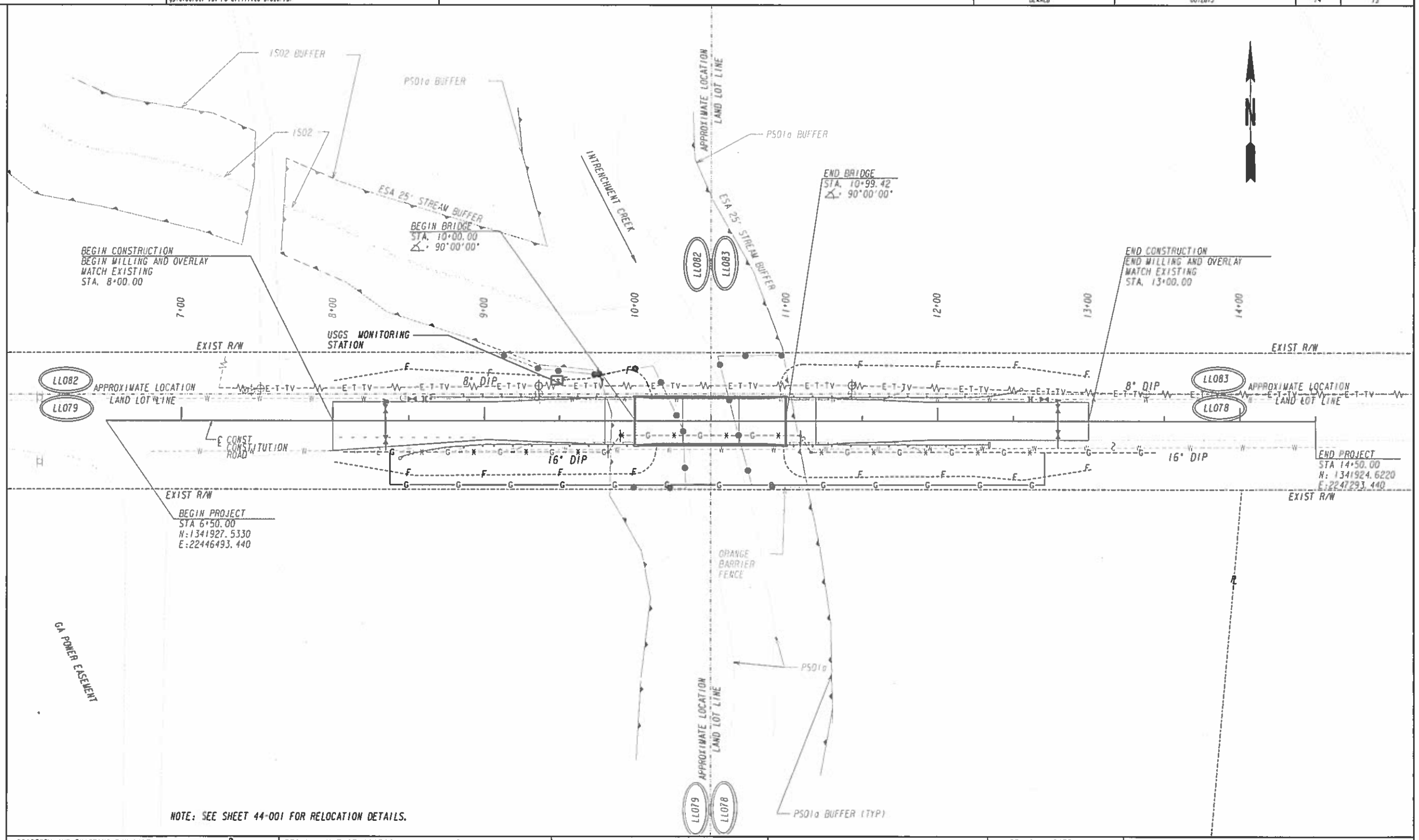

NOTE: SEE SHEET 44-001 FOR RELOCATION DETAILS.

PROPERTY AND EXISTING R/W LINE	BEGIN LIMIT OF ACCESS.....BLA
REQUIRED R/W LINE	END LIMIT OF ACCESS.....ELA
CONSTRUCTION LIMITS	LIMIT OF ACCESS
EASEMENT FOR CONSTR & MAINTENANCE OF SLOPES	R/W AND LIMIT OF ACCESS
EASEMENT FOR CONSTR OF SLOPES	EXISTING R/W LINE
EASEMENT FOR CONSTR OF DRIVES	ORANGE BARRIER FENCE

AECOM

SCALE IN FEET
0 30 60 120

REVISION DATES

DEKALB COUNTY
DEPARTMENT OF TRANSPORTATION

UTILITY PLAN

CONSTITUTION ROAD
BRIDGE OVER INTRENCHMENT CREEK

DRAWING NO. 24-001

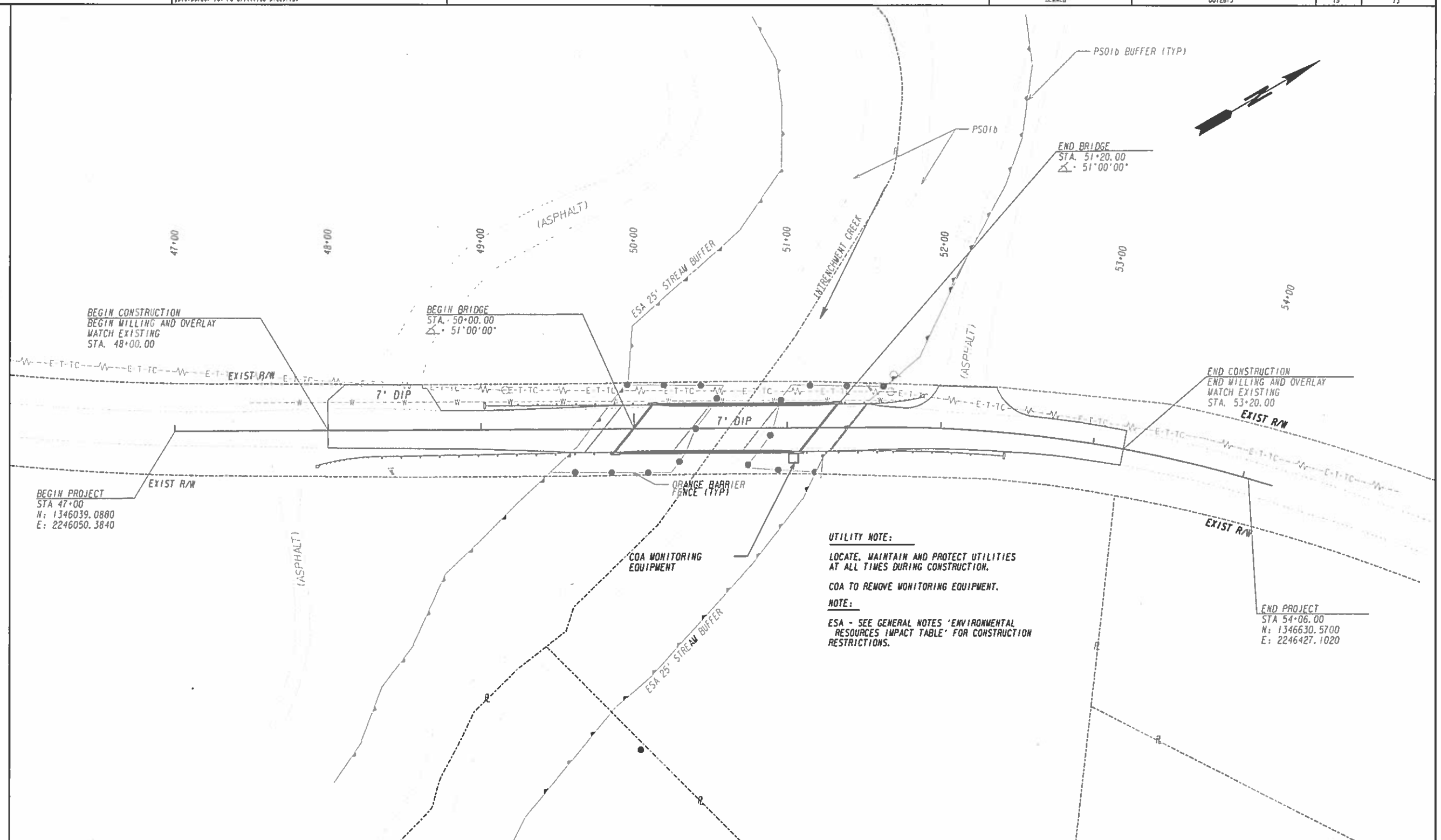

PROPERTY AND EXISTING R/W LINE	BEGIN LIMIT OF ACCESS.....BLA
REQUIRED R/W LINE	END LIMIT OF ACCESS.....ELA
CONSTRUCTION LIMITS	LIMIT OF ACCESS
EASEMENT FOR CONSTR & MAINTENANCE OF SLOPES	R/W AND LIMIT OF ACCESS
EASEMENT FOR CONSTR OF SLOPES	EXISTING R/W LINE
EASEMENT FOR CONSTR OF DRIVES	ORANGE BARRIER FENCE

AECOM

SCALE IN FEET
0 30 60 120

REVISION DATES

DEKALB COUNTY
DEPARTMENT OF TRANSPORTATION

UTILITY PLAN

KEY ROAD
BRIDGE OVER INTRENCHMENT CREEK

DRAWING No.
24-002

12/22/2015 9:43:45 AM
USER:Emily.Duvan-EST
pplotborder-V81-PO_SIGN2.tbl
P:\Projects_Legacy\ATL-P_Drive\1526\60427168 Dekalb County\900-CAD-EIS\910 CAD_BIM\912 - WA02 KC\DGN\ROY\DF-900F17SM01.dgn

COUNTY	PROJECT NUMBER	SHEET NO.	TOTAL SHEETS
DEKALB	0012613	16	78

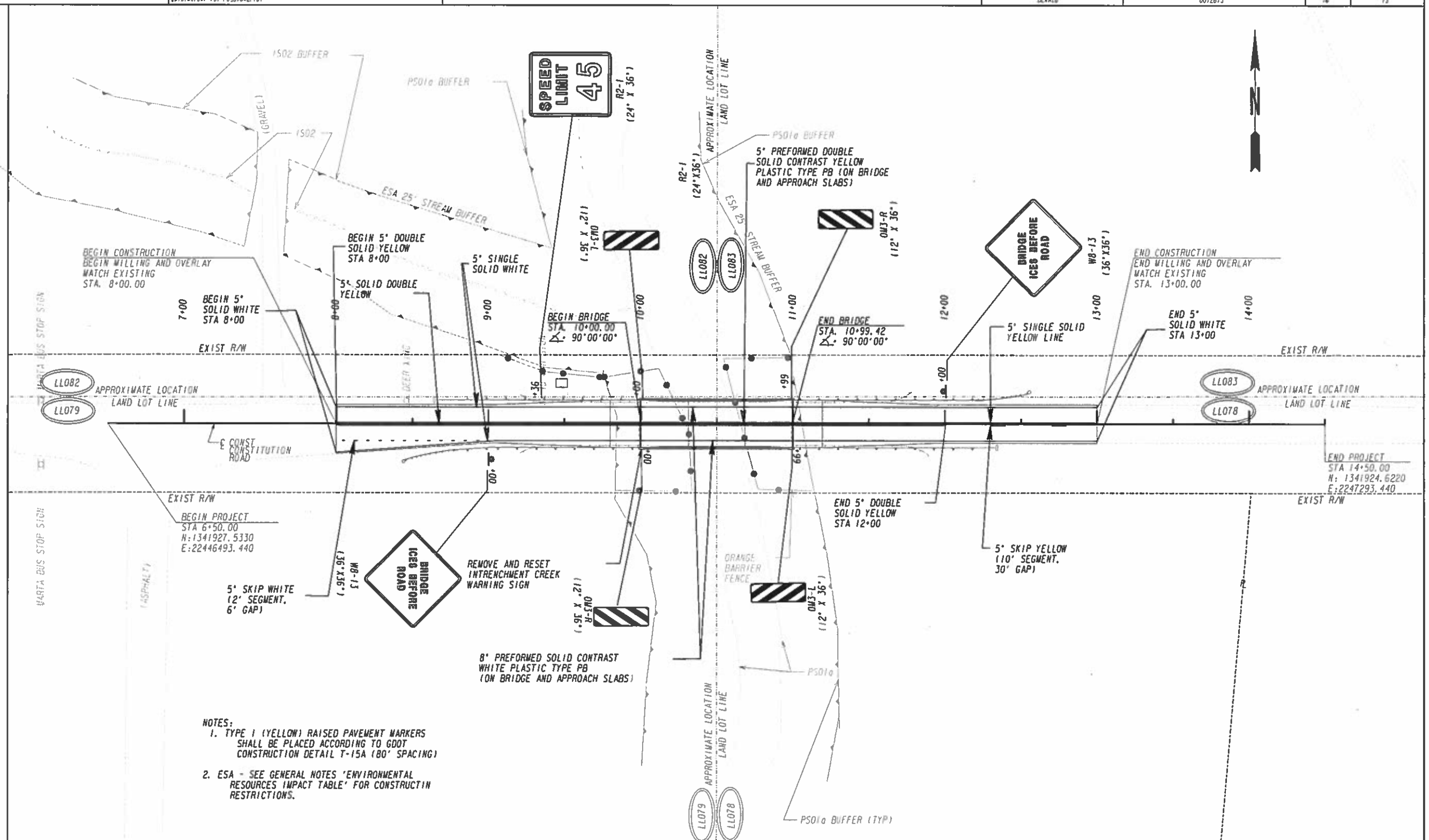

NOTES:
1. TYPE I (YELLOW) RAISED PAVEMENT MARKERS SHALL BE PLACED ACCORDING TO GDOT CONSTRUCTION DETAIL T-15A (80' SPACING)
2. ESA - SEE GENERAL NOTES 'ENVIRONMENTAL RESOURCES IMPACT TABLE' FOR CONSTRUCTIN RESTRICTIONS.

PROPERTY AND EXISTING R/W LINE	----R----
REQUIRED R/W LINE	———
CONSTRUCTION LIMITS	--C--F--
EASEMENT FOR CONSTR & MAINTENANCE OF SLOPES	
EASEMENT FOR CONSTR OF SLOPES	
EASEMENT FOR CONSTR OF DRIVES	

BEGIN LIMIT OF ACCESS	BLA
END LIMIT OF ACCESS	ELA
LIMIT OF ACCESS	
R/W AND LIMIT OF ACCESS	
EXISTING R/W LINE	
ORANGE BARRIER FENCE	

AECOM

SCALE IN FEET
0 30 60 120

REVISION DATES

DEKALB COUNTY
DEPARTMENT OF TRANSPORTATION

SIGNING AND MARKING PLANS

CONSTITUTION ROAD
BRIDGE OVER INTRENCHMENT CREEK

DRAWING No. 26-001

12/22/2015 9:44:03 AM
USER:Emily_Owens-EST

gplotborder-V8I-PO_SIGR2.tbl

P:\Projects_Legacy\ATL-P_Drive\1528\60427168 Dekalb County\900-CAD-GIS\910 CAD_BIM\912 - WA02 XC\DGN\ROY\07-900T17SW02.dgn

COUNTY	PROJECT NUMBER	SHEET NO.	TOTAL SHEETS
DEKALB	0012613	17	73

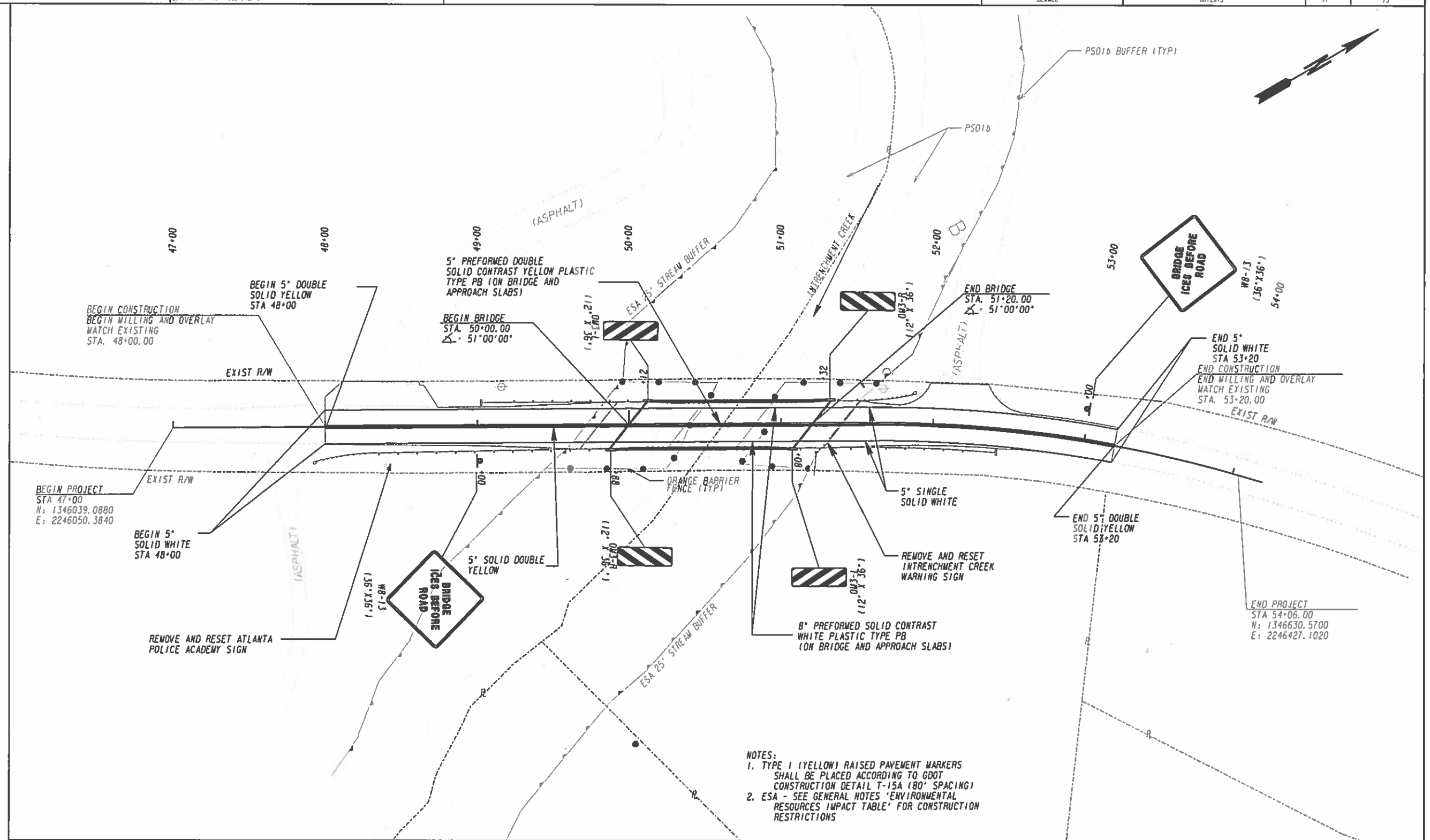

NOTES:
1. TYPE I (YELLOW) RAISED PAVEMENT MARKERS SHALL BE PLACED ACCORDING TO GDOT CONSTRUCTION DETAIL T-15A (80' SPACING)
2. ESA - SEE GENERAL NOTES 'ENVIRONMENTAL RESOURCES IMPACT TABLE' FOR CONSTRUCTION RESTRICTIONS

PROPERTY AND EXISTING R/W LINE	BEGIN LIMIT OF ACCESS.....BLA
REQUIRED R/W LINE	END LIMIT OF ACCESS.....ELA
CONSTRUCTION LIMITS	LIMIT OF ACCESS
EASEMENT FOR CONSTR & MAINTENANCE OF SLOPES	R/W AND LIMIT OF ACCESS
EASEMENT FOR CONSTR OF SLOPES	EXISTING R/W LINE
EASEMENT FOR CONSTR OF DRIVES	ORANGE BARRIER FENCE

AECOM

SCALE IN FEET
0 30 60 120

REVISION DATES

DEKALB COUNTY
DEPARTMENT OF TRANSPORTATION

SIGNING AND MARKING PLANS

KEY ROAD
BRIDGE OVER INTRENCHMENT CREEK

DRAWING No. 26-002

COUNTY	PROJECT NUMBER	SHEET NO.	TOTAL SHEETS
DEKALB	0012613	18	73

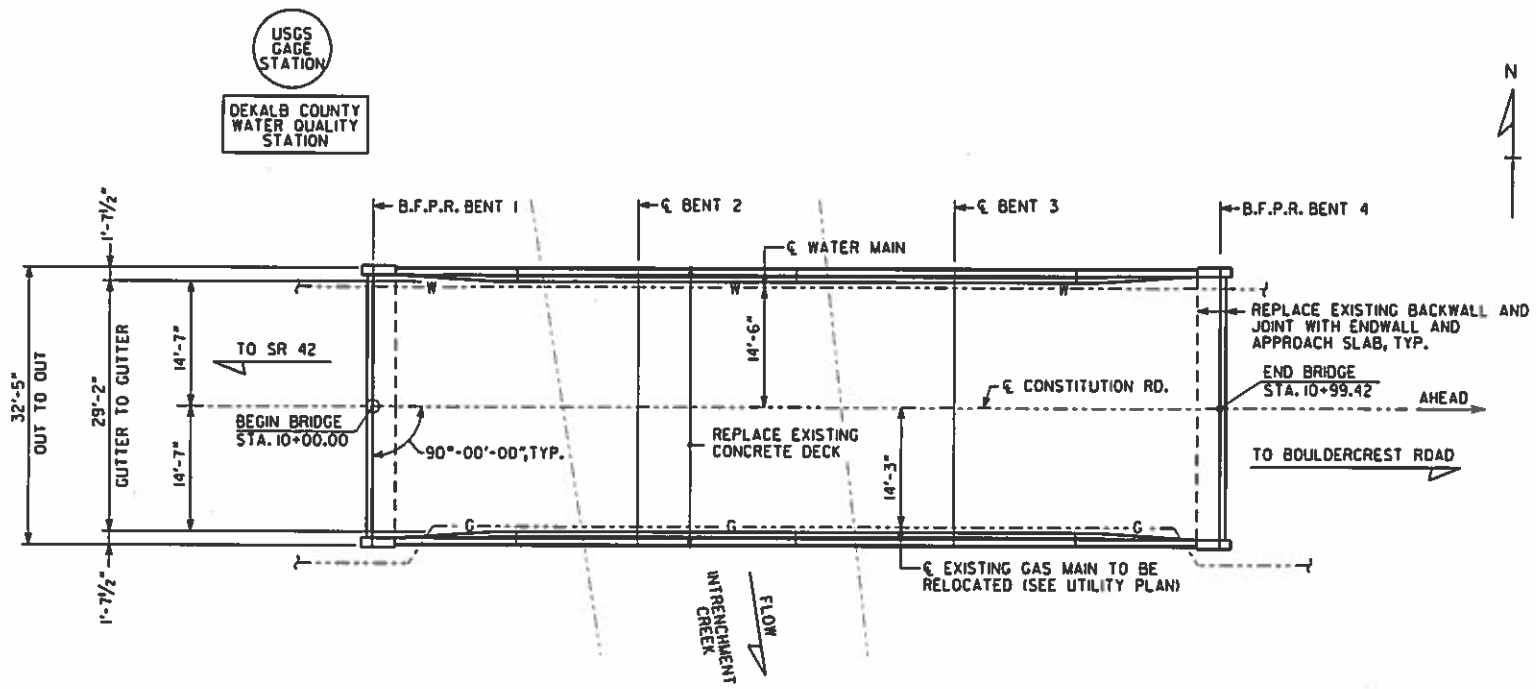

PLAN

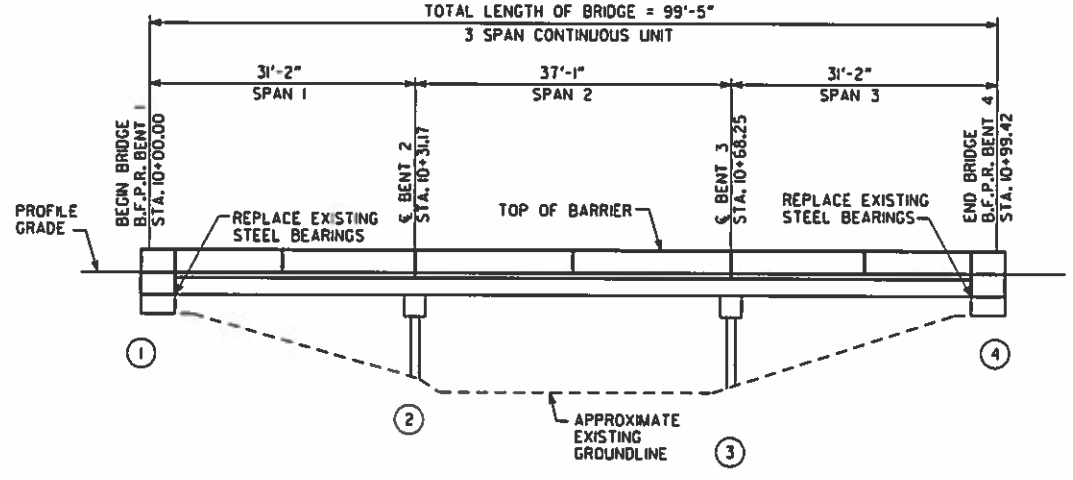

ELEVATION

WORK CONSISTS OF

1. REPLACE EXISTING DECK WITH COMPOSITE REINFORCED CONCRETE DECK.
2. REPLACE EXISTING BACKWALLS WITH NEW CONCRETE ENDWALLS AT BENTS 1 AND 4.
3. REPLACE EXISTING SAFETY CURB WITH CONCRETE BARRIER AND ENDPOSTS.
4. INSTALL NEW UTILITY SUPPORTS.
5. REPLACE EXISTING BEARINGS AT BENTS 1 AND 4.
6. INSTALL SHEAR STUDS AND STEEL DIAPHRAGMS.
7. CLEAN AND PAINT STRUCTURAL STEEL.
8. CLEAR VEGETATION AND DEBRIS FROM UNDER BRIDGE.

CONSTITUTION ROAD GRADE DATA

1. THERE ARE NO EXISTING PLANS OR SURVEY DATA AVAILABLE FOR THIS PROJECT. ALL DIMENSIONS SHOWN ARE APPROXIMATE AND MUST BE FIELD VERIFIED.
2. CONTRACTOR SHALL SURVEY THE EXISTING CENTERLINE OF CONSTITUTION ROAD TO ESTABLISH AN EXISTING PROFILE AT 20 FOOT INTERVALS WITHIN THE LIMITS OF CONSTRUCTION.
3. AFTER REMOVAL OF EXISTING DECK, CONTRACTOR SHALL SURVEY THE TOP OF EACH EXISTING STEEL BEAM AT SUFFICIENT INTERVALS TO ESTABLISH A PROPOSED PROFILE.
4. CONTRACTOR SHALL SUBMIT, FOR APPROVAL BY THE ENGINEER, A PROPOSED PROFILE SHOWING THE INCREASED DECK ELEVATION AND TRANSITION TO THE EXISTING PAVEMENT AS SHOWN ON THE ROADWAY PLANS.
5. THE DECK REPLACEMENT SHALL RAISE THE PROFILE APPROXIMATELY 1½" WITHIN THE LIMITS OF THE BRIDGE.

EXISTING BRIDGE SERIAL NO. 089-0149-0
EXISTING BRIDGE I.D. NO. 089-09082M-000.74E
PROJECT P.I. NO. 0012613

BRIDGE NO. 1

AECOM

DEKALB COUNTY, GEORGIA
DEPARTMENT OF PUBLIC WORKS

PLAN AND ELEVATION
CR 5149 (CONSTITUTION ROAD) OVER INTRENCHMENT CREEK

DEKALB COUNTY

BY	REVISIONS	DATE

DRAWING NO. 35-001
BRIDGE SHEET 1 OF 5

SCALE: 1" = 10'-0" SEPTEMBER 2015

DESIGNED WBN CHECKED CLE REVIEWED AP
DRAWN WBN DESIGN GROUP APPROVED DEKALB

1 INCH WHEN PRINTED FULL SIZE

0012613.bl18pe.dgn 6:31:56 AM 9/3/2015

GENERAL NOTES

SPECIFICATIONS - GEORGIA STANDARD SPECIFICATIONS, 2013 EDITION, AS MODIFIED BY CONTRACT DOCUMENTS. WHERE SPECIFICATIONS REFER TO THE GEORGIA DEPARTMENT OF TRANSPORTATION, DEPARTMENT, OR ENGINEER, IT SHALL ALSO MEAN DEKALB COUNTY.

WORKING DRAWINGS - WHEN SUBMITTING SHOP DRAWINGS FOR THIS PROJECT TO THE DOT GENERAL OFFICE, SUBMIT THEM TO DEKALB COUNTY.

REINFORCING STEEL - PLACE AND TIE ALL REINFORCING STEEL IN ACCORDANCE WITH THE GEORGIA DOT SPECIFICATIONS. DO NOT WELD REINFORCING STEEL.

CHAMFER - CHAMFER ALL EXPOSED CONCRETE EDGES ¾" UNLESS OTHERWISE NOTED.

TEMPORARY SHORING - INCLUDE THE COST OF TEMPORARY SHORING AS NECESSARY FOR BRIDGE CONSTRUCTION IN THE OVERALL BID SUBMITTED.

TRAFFIC CONTROLS - ROAD TO BE CLOSED DURING BRIDGE CONSTRUCTION. SEE ROADWAY PLANS FOR DETOUR, TRAFFIC CONTROLS AND TRAFFIC CONTROL PAYMENT.

EXISTING BRIDGE PLANS - ORIGINAL BRIDGE PLANS ARE NOT AVAILABLE.

DIMENSIONS AND ELEVATIONS - VERIFY ALL DIMENSIONS AND ELEVATIONS IN THE FIELD PRIOR TO ORDERING MATERIALS OR BUILDING FORMS. LIGHT LINES INDICATE THE EXISTING STRUCTURE AND HEAVY LINES INDICATE THE NEW STRUCTURE.

EPOXY RESIN ADHESIVE - APPLY EPOXY RESIN ADHESIVE TYPE II TO ALL HARDENED CONCRETE SURFACES JUST PRIOR TO POURING THE CONCRETE FOR THE NEXT STAGE OF CONSTRUCTION, SEE SECTION 886 OF THE GEORGIA DOT SPECIFICATIONS. INCLUDE THE COST OF EPOXY ADHESIVE AND ITS APPLICATION IN THE OVERALL BID SUBMITTED.

EXISTING RIP RAP - INCLUDE THE COST OF REMOVING, RELAYING, AND/OR REPLACING RIP RAP IN THE OVERALL BID SUBMITTED.

ANCHOR BOLTS - PLACE ANCHOR BOLTS IN DRILLED 3" DIAMETER X 12" DEEP HOLES AND GROUT IN PLACE AS PER SUB-SECTION 501.3.05.B.3 OF THE GEORGIA DOT SPECIFICATIONS.

WATER MAIN - FURNISH AND INSTALL INSERTS, HANGER ASSEMBLIES AND WATER MAIN. INSERTS SHALL BE GRINNELL FIGURE 282 OR APPROVED EQUAL. INCLUDE THE COST FOR FURNISHING AND INSTALLING INSERTS IN THE OVERALL BID SUBMITTED. INCLUDE THE COST FOR FURNISHING AND INSTALLING HANGER ASSEMBLIES AND WATER MAIN IN THE PRICE BID FOR PAY ITEM 670 - WATER MAIN.

WATER MAIN CASING - ENCASE THE WATER MAIN IN A STEEL PIPE FROM THE BACKFACE OF THE ENDWALL TO 2'-0" BEYOND THE LIMIT OF THE APPROACH SLAB. SUBMIT DETAILS FOR CONNECTION OF CASING TO THE ENDWALL TO THE ENGINEER FOR APPROVAL. FURNISH AND INSTALL THE CASING AND INCLUDE THE COST IN THE PRICE BID FOR PAY ITEM 670 - STEEL CASING.

GAS MAIN - REMOVE EXISTING GAS MAIN AND HANGERS PRIOR TO BRIDGE DECK REMOVAL. COORDINATE REMOVAL WITH UTILITY OWNER. INCLUDE COST FOR REMOVAL IN THE PRICE BID FOR REMOVAL OF PARTS OF EXISTING BRIDGE.

EXISTING UTILITIES - MAINTAIN, PROTECT AND PROVIDE TEMPORARY SUPPORT FOR EXISTING UTILITIES AT ALL TIMES DURING CONSTRUCTION. SUBMIT DETAILS FOR TEMPORARY SUPPORT OF UTILITIES TO THE ENGINEER FOR APPROVAL. INCLUDE THE COST FOR THIS WORK IN THE OVERALL BID SUBMITTED.

GROOVED CONCRETE - GROOVE THE ENTIRE LENGTH OF THE BRIDGE TRANSVERSELY AS PER SUB-SECTION 500.3.05.T.9.C OF THE GEORGIA DOT SPECIFICATIONS.

WELDING - ALL WELDING ON GEORGIA DOT PROJECTS SHALL BE PERFORMED BY CERTIFIED WELDERS THAT HAVE IN THEIR POSSESSION A CURRENT WELDING CERTIFICATION CARD ISSUED BY THE OFFICE OF MATERIALS AND RESEARCH. USE ONLY E70XX (EXCLUDING E7014 AND E7024) LOW HYDROGEN ELECTRODES FOR MANUAL SHIELDED METAL ARC WELDING.

JACKING OF EXISTING BRIDGE - RAISE EXISTING STRUCTURE THE MINIMUM HEIGHT NECESSARY TO REPLACE BEARINGS AT BENTS 1 AND 4. PERFORM JACKING IN ACCORDANCE WITH THE SPECIAL PROVISIONS. INCLUDE COST FOR THIS WORK IN THE PRICE BID FOR ITEM 518 RAISE EXISTING BRIDGE.

BEARING REPLACEMENT - REPLACE EXISTING BEARINGS AT BENTS 1 AND 4. INCLUDE THE COST FOR THIS WORK IN THE PRICE BID FOR ITEM 501 STR STEEL.

SALVAGE MATERIAL - NO MATERIAL REMOVED FROM THE EXISTING STRUCTURE SHALL BE SALVAGED FOR USE BY DEKALB COUNTY.

BRIDGE DECK PROFILE - SURVEY THE EXISTING DECK PRIOR TO DECK REMOVAL. SURVEY THE TOP OF EXISTING GIRDERS AFTER THE DECK IS REMOVED. SUBMIT CALCULATIONS FOR DECK FORM ORDINATES TO THE ENGINEER FOR APPROVAL PRIOR TO POURING THE DECK. INCLUDE THE COST FOR THIS WORK IN THE OVERALL BID SUBMITTED.

INCIDENTAL ITEMS - INCLUDE THE COST INCIDENTAL TO THE WORK THAT IS NOT SPECIFICALLY COVERED BY THE GEORGIA STANDARD SPECIFICATIONS, SUPPLEMENTAL SPECIFICATIONS AND/OR SPECIAL PROVISIONS IN THE OVERALL BID SUBMITTED. THIS INCLUDES THE COST OF CLEANING AND BENDING OF EXISTING REINFORCEMENT, WATERPROOFING, JOINT FILLERS, AND OTHER INCIDENTAL ITEMS NECESSARY TO COMPLETE THE WORK.

USGS/DEKALB COUNTY WATER MONITORING STATIONS - AT LEAST FOUR WEEKS PRIOR TO REMOVAL OF THE EXISTING BRIDGE DECK, CONTACT CHRIS SMITH (678) 924-6686, BRIAN MCCALLUM (678) 924-6672 OR TONY GOTVALD (678) 924-6648 OF THE USGS REGIONAL OFFICE IN ATLANTA FOR THE COORDINATION OF REMOVAL AND RESETTING OF THE EXISTING CABINET ATTACHED TO THE UPSTREAM FACE OF THE EXISTING BRIDGE. INCLUDE THE COST OF REMOVAL AND RESETTING THE CABINET (IF REQUIRED) IN THE OVERALL BID FOR THE CONTRACT ITEMS.

GENERAL NOTES

REMOVAL OF PARTS OF EXISTING BRIDGE - INCLUDE THE COST FOR REMOVAL OF PORTIONS OF EXISTING DECK SLAB, SAFETY CURBS, RAILINGS AND BACKWALLS IN THE PRICE BID FOR ITEM 540 REMOVAL OF PARTS OF EXISTING BRIDGE.

SHEAR CONNECTORS - FURNISH AND INSTALL NEW SHEAR CONNECTORS IN ACCORDANCE WITH SECTION 512 OF THE GEORGIA DOT SPECIFICATIONS. PROVIDE SHEAR CONNECTORS MEETING THE MINIMUM SIZE AND SPACING AS SHOWN ON PLANS. INCLUDE COST FOR THIS WORK IN THE PRICE BID FOR STR STEEL.

EXISTING STRUCTURAL STEEL - ALL EXISTING STEEL WHICH IS DISTURBED OR DAMAGED IN ANY WAY DURING CONSTRUCTION SHALL BE STRAIGHTENED AND/OR REPAIRED UNDER THE SUPERVISION OF THE INSPECTION SECTION OF THE OFFICE OF MATERIALS, AND CLEANED AND REPAIRED PER THE GEORGIA DOT SPECIFICATIONS.

VEGETATION - CUT AND REMOVE VEGETATION FROM AROUND SUBSTRUCTURE AND APPROACHES, 5 FT FROM OUTSIDE EDGE OF BRIDGE OPENING. CUT AND REMOVE TREES TO GROUNDLINE. APPLY APPROVED HERBICIDE TO KILL ROOT SYSTEM. INCLUDE COST OF REMOVAL AND MATERIALS IN THE OVERALL BID SUBMITTED.

PAINTING NOTES:

1. CLEAN AND PAINT ALL NEW AND EXISTING STRUCTURAL STEEL IN ACCORDANCE WITH SECTION 535 OF THE GEORGIA DOT SPECIFICATIONS, PAINTING STRUCTURES. SYSTEM XII PAINT SHALL BE USED ON ALL EXPOSED SUPERSTRUCTURE STEEL.
2. THE STRUCTURE IS 100 FT. LONG +/- WITH A TOTAL ESTIMATED AREA OF STEEL TO BE PAINTED OF 1,200 SF. PRIOR TO BIDDING, IT IS THE RESPONSIBILITY OF THE CONTRACTOR TO MEASURE AND VERIFY THE AREA OF STEEL TO BE PAINTED.
3. THE EXISTING PAINT ON THE BRIDGE STRUCTURAL STEEL IS A LEAD-BASED PAINT SYSTEM.
4. AFTER THE PAINTING IS COMPLETED, STENCIL THE SERIAL NUMBER (089-0149-0) OF THE BRIDGE ON THE INSIDE FACE OF THE WEB OF THE FAR RIGHT BEAM NEAR BOTH THE FIRST AND THE LAST BENT (BOTH ENDS OF BRIDGE). USE A 5" HIGH NUMBER STENCIL AND BLACK PERMANENT PAINT.COSTS ASSOCIATED WITH THIS WORK, INCLUDING MATERIALS AND LABOR, ARE TO BE INCLUDED IN THE OVERALL BID SUBMITTED.
5. NO MODIFICATION OF THE EXISTING STRUCTURAL STEEL IS ALLOWED, INCLUDING BUT NOT LIMITED TO PUNCTURING, CUTTING, WELDING, OR OTHER OPERATIONS WHICH MODIFY THE STRUCTURAL INTEGRITY OF THE BRIDGE. REPAIR ANY DAMAGES TO THE STRUCTURAL STEEL CAUSED BY THE BLAST CLEANING OR ANY OTHER RELATED OPERATIONS, AT NO CHARGE TO THE DEPARTMENT. ALL REPAIRS ARE TO BE APPROVED BY THE ENGINEER.
6. PROTECT ALL EXISTING UTILITIES FROM DAMAGE CAUSED BY THE BLAST CLEANING, PAINT OVERSPRAY, OR ANY OTHER RELATED OPERATIONS. REPAIR ANY DAMAGE AT NO ADDITIONAL EXPENSE TO THE COUNTY.
7. ALL CONCRETE AND DECK WORK SHALL BE COMPLETED PRIOR TO BEGINNING PAINTING WORK.
8. THE COST OF PAINTING NEW AND EXISTING STRUCTURAL STEEL SHALL BE INCLUDED IN THE PRICE BID FOR PAINT EXISTING STEEL STRUCTURE.

CONSTRUCTION SEQUENCE

1. INSTALL DETOUR.
2. REMOVE EXISTING DECK, RAILINGS AND BACKWALL.
3. JACK AND REPLACE END BENT BEARINGS.
4. INSTALL STEEL DIAPHRAGMS.
5. CONSTRUCT CONCRETE DECK AND ENDWALLS.
6. PAINT BRIDGE.
7. BACKFILL AND COMPACT FILL BEHIND END BENTS.
8. INSTALL NEW APPROACH SLABS.
9. COMPLETE ROADWAY PAVING AND GUARDRAIL.
10. OPEN BRIDGE TO TRAFFIC.

IN LIEU OF THE ABOVE CONSTRUCTION SEQUENCE, THE CONTRACTOR MAY SUBMIT AN ALTERNATE CONSTRUCTION SEQUENCE FOR APPROVAL.

BRIDGE CONSISTS OF

1 - 3 SPAN W BEAM CONTINUOUS UNIT (31'-2", 37'-1", 31'-2") ---------- EXISTING

2 - STEEL H-PILE INTERMEDIATE BENTS ---------- EXISTING

2 - STEEL H PILE END BENTS ---------- EXISTING

4 - END POST AND GUARDRAIL ATTACHMENT DETAIL (L = 4'-0"; W = 1'-3½"; H = 2'-8") ------- GA. STD. 3054 (9-30-02)

BAR BENDING DETAILS ---------- GA. STD. 3901 (8-69)

TYPICAL FILL DETAIL AT END OF BRIDGE ---------- GA. STD. 9037 (10-20-97)

DESIGN DATA

SPECIFICATIONS ---------- AASHTO 17TH EDITION, 2002

TYPICAL HS20-44 LOADING (DECK ONLY) ---------- IMPACT ALLOWED

FUTURE PAVING ALLOWANCE (DECK ONLY) ---------- 30 PSF

CONCRETE: CLASS AA ---------- f'_c = 3,500 PSI
CLASS A ---------- f'_c = 3,000 PSI

REINFORCEMENT STEEL ---------- GRADE 60, f_y = 60,000 PSI

STRUCTURAL STEEL ---------- ASTM A709, GRADE 36

EXISTING UTILITIES

GAS MAIN ---------- ATLANTA GAS LIGHT

WATER MAIN ---------- DEKALB COUNTY

GAGE STATION ---------- USGS

WATER QUALITY SAMPLING STATION ---------- DEKALB COUNTY

SUMMARY OF QUANTITIES

PAY ITEM NUMBER	QUANTITY	UNIT	PAY ITEM
500-0100	305	SY	GROOVED CONCRETE
500-2100	188	LF	CONCRETE BARRIER
500-3001	95	CY	CLASS AA CONCRETE, HES
500-3101	1	CY	CLASS A CONCRETE
501-3000	7000	LB	STR STEEL, BR NO-1
511-1000	24	LB	BAR REINF STEEL
511-3000	25300	LB	SUPERSTR REINF STEEL, BR NO - 1
518-1000	LUMP	LS	RAISE EXISTING BRIDGE, STA - 10+50
535-1105	LUMP	LS	PAINT EXIST STEEL STRUCTURE, BR ID - 089-09082M-000.74E
540-1202	LUMP	LS	REMOVAL OF PARTS OF EXISTING BR, BR NO - 1

BRIDGE NO. 1

AECOM

DEKALB COUNTY, GEORGIA
DEPARTMENT OF PUBLIC WORKS

GENERAL NOTES
CR 5149 (CONSTITUTION ROAD) OVER INTRENCHMENT CREEK

DEKALB COUNTY

REVISIONS	BY	DATE

DRAWING NO. 35-002
BRIDGE SHEET 2 OF 5

SCALE: NO SCALE — SEPTEMBER 2015

DESIGNED WBN — CHECKED CLE — REVIEWED AP
DRAWN WBN — DESIGN GROUP — APPROVED DEKALB

1 INCH WHEN PRINTED FULL SIZE

0012613.bl19gn.dgn 1:03:18 PM 1/19/2016

COUNTY	PROJECT NUMBER	SHEET NO.	TOTAL SHEETS
DEKALB	0012613	20	73

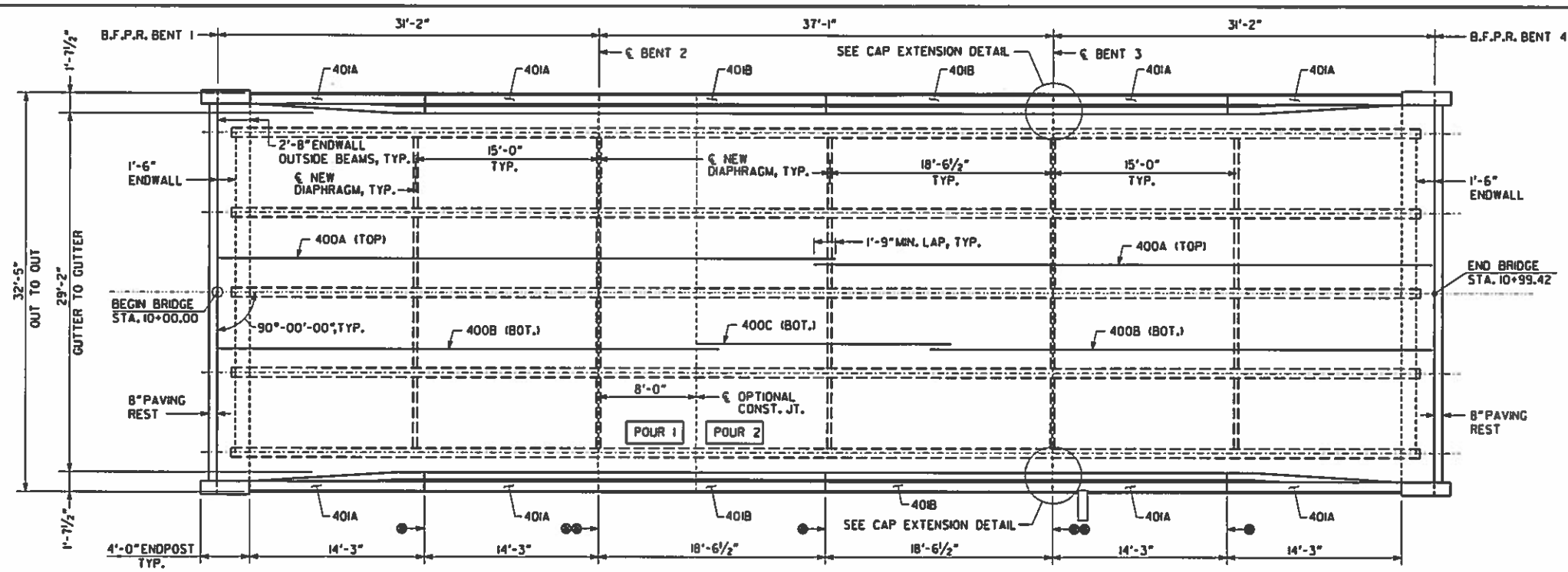

DECK PLAN

● ℄ 1" EXP. JOINT IN BARRIER

●● ℄ REQ'D DUMMY JOINT IN SLAB AND 1" EXP. JOINT IN BARRIER

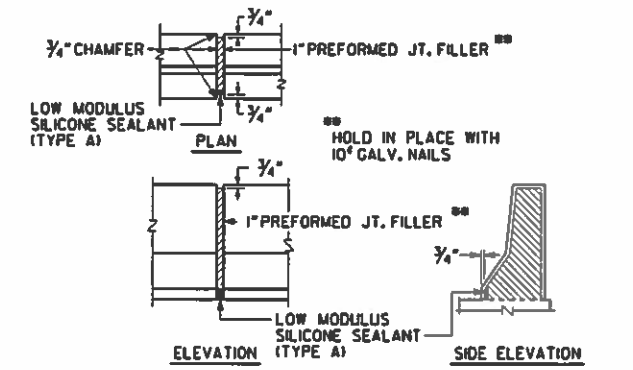

DETAILS OF 1" EXPANSION JOINT IN BARRIER

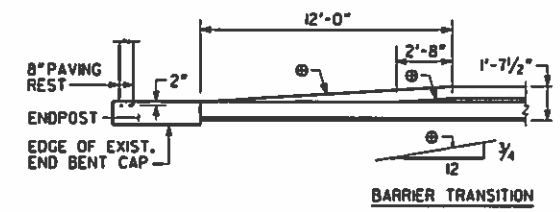

BARRIER TRANSITION DETAIL

REINFORCING SCHEDULE

LOCATION	NO. OF LOC.	MARK	LENGTH FT.	LENGTH IN.	NO. BARS REQ'D.	TYPE	A	G	B FT.	B IN.	C FT.	C IN.	D FT.	D IN.	E FT.	E IN.	F FT.	F IN.	N	θ
SPAN 1 OR 3	2																			
		400A	50	6	25	1														
		400B	41	0	48	1														
		401A	13	11	24	1														
		402	5	10	58	3			5	0	0	10								
		404	32	11	3	1														
		405	3	3	6	1														
		500	33	6	57	2			31	10	0	10	0	10						
		501	32	1	57	1														
		503A	6	9	60	23			0	9	3	0	3	0						96
		503B	4	11	60	23			0	5	2	3	2	3						84
		504	5	6	22	46			1	10	2	0	0	3	1	0	1	0		
		505	30	8	1	1														
		506	4	5	44	3			2	5	2	0								
		507	3	8	6	3			1	10	1	10								
		800	32	11	3	1														
SPAN 2	1																			
		400C	20	9	48	1														
		401B	18	2	24	1														
		402	5	10	66	3			5	0	0	10								
		500	33	6	68	2			31	10	0	10	0	10						
		501	32	6	68	1														
		503A	6	9	76	23			0	9	3	0	3	0						96
		503B	4	11	76	23			0	5	2	3	2	3						84
BENT 3	1																			
		430	2	7	8	3			1	5	1	2								
		431	2	8	6	10	1	1	1	8										

DGN
TIME$$$
DATE$$$

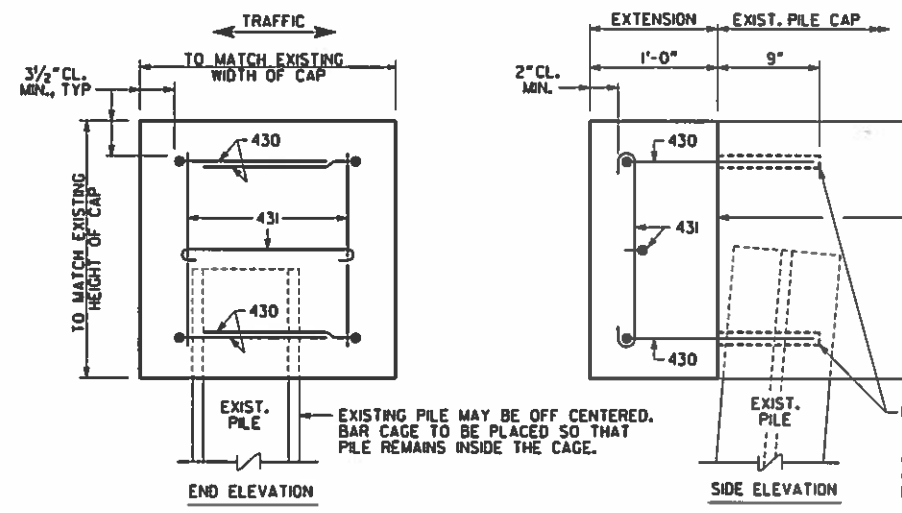

CAP EXTENSION REPAIR

BENT 3 ONLY, AT CAP ENDS

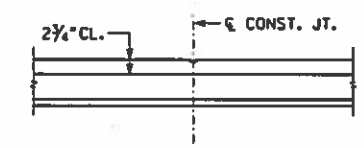

CONST. JT. IN SLAB DETAIL

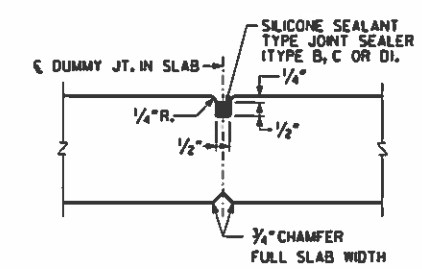

DUMMY JOINT DETAIL

SUPERSTRUCTURE QUANTITIES

ITEM	SPAN 1	SPAN 2	SPAN 3	TOTAL
CY - CLASS AA CONCRETE, HES	32.0	31.0	32.0	95.0
LUMP - LB SUPERSTR REINF STEEL	9,000	7,300	9,000	25,300

NOTE: END POST CONCRETE AND BAR REINFORCEMENT STEEL INCLUDED IN END SPAN QUANTITIES.

SUBSTRUCTURE QUANTITIES

ITEM	BENT 3
LUMP - CY CLASS A CONCRETE	0.3
LUMP - LB BAR REINF STEEL	24

BRIDGE NO. 1

AECOM

DEKALB COUNTY, GEORGIA

DEPARTMENT OF PUBLIC WORKS

DECK PLAN

CR 5149 (CONSTITUTION ROAD) OVER INTRENCHMENT CREEK

DEKALB COUNTY

REVISIONS | DATE | BY

DRAWING NO. 35-003

BRIDGE SHEET 3 OF 5

SCALE: NO SCALE

SEPTEMBER 2015

DESIGNED WBN | CHECKED CLE | REVIEWED AP

DRAWN WBN | DESIGN GROUP | APPROVED DEKALB

1 INCH WHEN PRINTED FULL SIZE

COUNTY	PROJECT NUMBER	SHEET NO.	TOTAL SHEETS
DEKALB	0012613	21	73

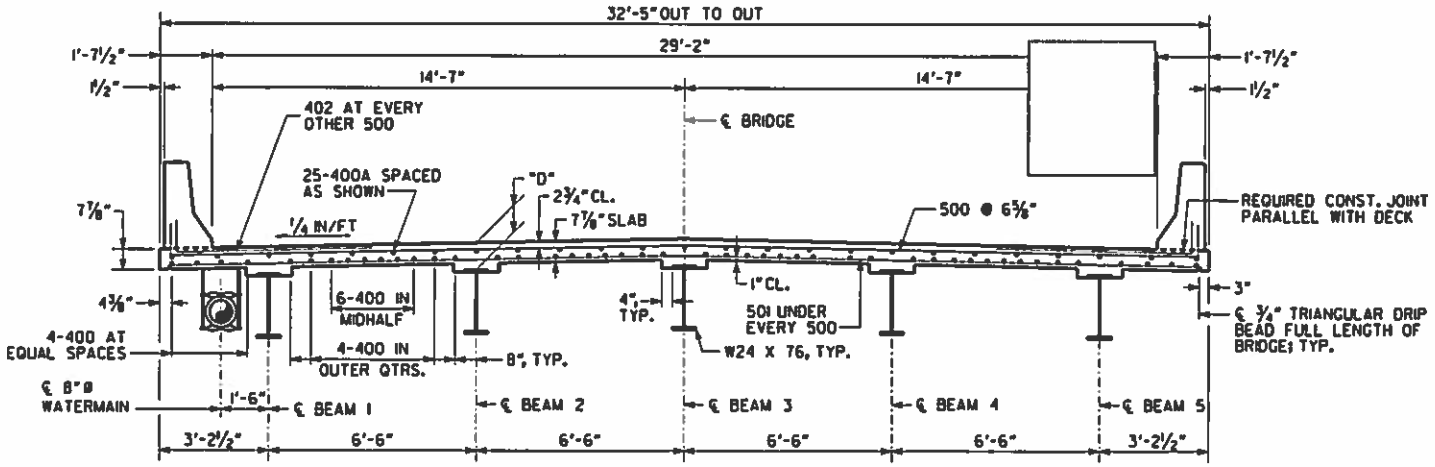

SECTION THRU SLAB

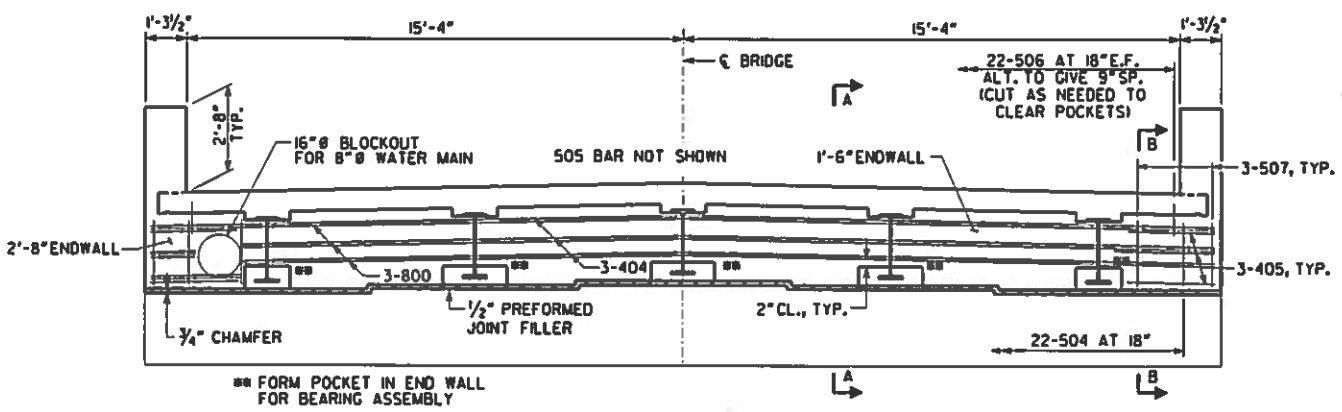

SECTION THRU ENDWALL

* TAPERS TO 0" AT END POST

** AT CONTRACTOR'S OPTION, 10" RADIUS MAY BE REPLACED BY STRAIGHT INTERSECTING SLOPES.

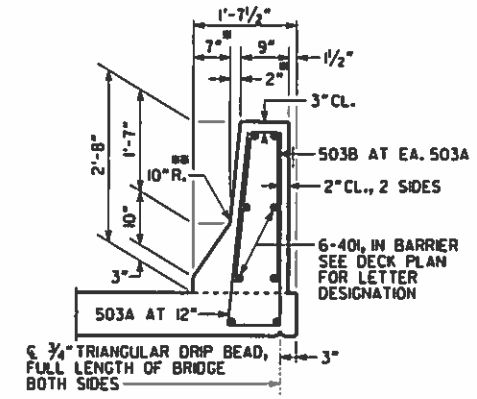

BARRIER DETAIL

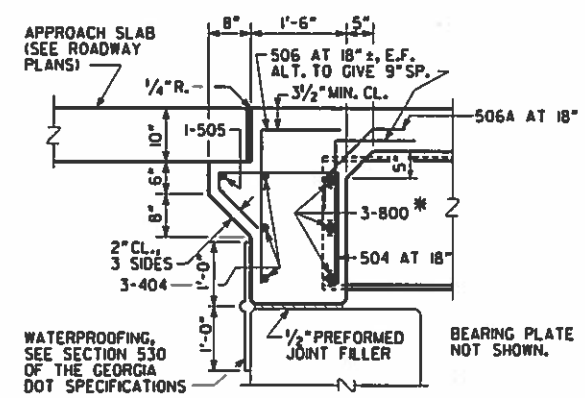

SLAB REINFORCEMENT NOT SHOWN.

SECTION A-A

* DRILL HOLES FOR 800 BARS

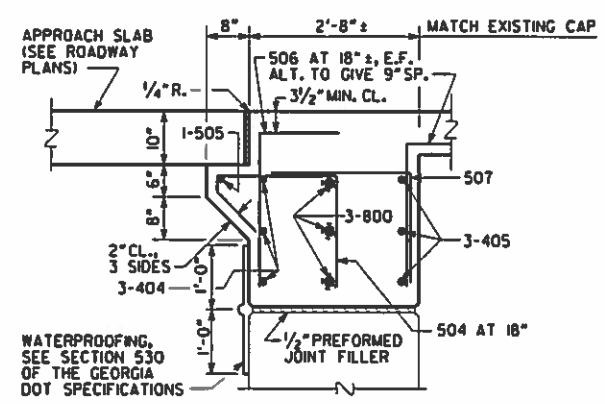

SLAB REINFORCEMENT NOT SHOWN.

SECTION B-B

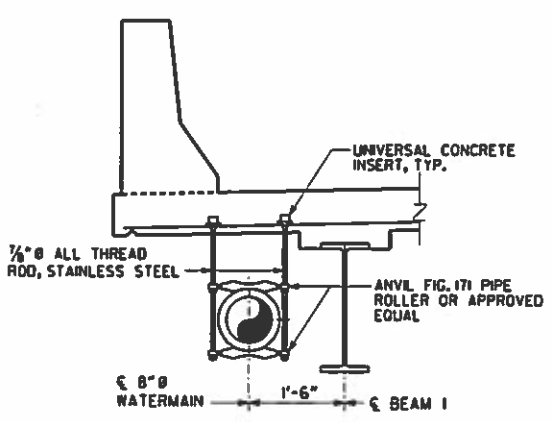

WATER MAIN HANGER DETAIL

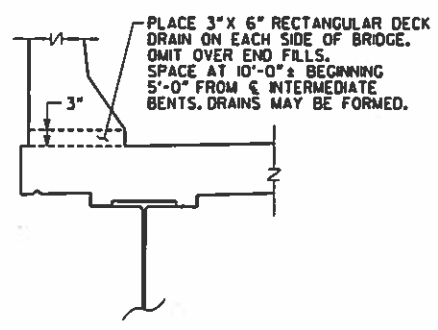

DECK DRAIN DETAIL

UTILITY NOTES:

1. WATER MAIN HANGERS SHALL BE SPACED AT 10'-0" ± ON CENTERS, 4'-0" MAX. FROM ℄ BENT OR B.F.P.R., AND 4'-0" MAX. FROM PIPE JOINTS.
2. ALL STEEL SHALL BE GALVANIZED AS PER ASTM A123 OR A153.
3. SUBMIT SHOP DRAWINGS FOR ALL UTILITY SUPPORTS TO THE ENGINEER FOR APPROVAL.
4. USE GRINNELL C.B. UNIVERSAL CONCRETE INSERT FIG. 282 OR APPROVED EQUAL.

NOTES:

1. DIMENSION "D" IS MEASURED FROM TOP OF SLAB TO TOP OF BEAM AT CENTERLINE OF BEARING.

   "D" = 8½"
2. VARY "D" BETWEEN BEARINGS TO COMPENSATE FOR DEAD LOAD DEFLECTION AND VERTICAL CURVE.
3. MAINTAIN A CONSTANT SLAB THICKNESS AS INDICATED ON SECTIONS BETWEEN BEAMS AND IN OVERHANGS.
4. MAINTAIN 2" CL. ON ALL REINFORCEMENT UNLESS OTHERWISE NOTED.
5. PROVIDE 14" DIAMETER BLOCKOUT THROUGH ENDWALL FOR WATER MAIN. COST SHALL BE INCLUDED IN THE OVERALL BID SUBMITTED.
6. CUT EXISTING BACKWALL REINFORCING STEEL LEVEL WITH END BENT CAP SEAT PRIOR TO CONSTRUCTING ENDWALL.
7. THE CONTRACTOR SHALL PROVIDE BRACING BETWEEN THE EXTERIOR BEAM AND THE FIRST INTERIOR BEAM UNTIL THE DECK HAS BEEN POURED, THE OVERHANG FORMS HAVE BE REMOVED AND THE DIAPHRAGMS WELDED. ALL COSTS FOR DESIGNING, PROVIDING, INSTALLING AND REMOVING BRACING SHALL BE INCLUDED IN PRICE BID FOR LUMP - STRUCTURAL STEEL.

BRIDGE NO. 1

AECOM

DEKALB COUNTY, GEORGIA

DEPARTMENT OF PUBLIC WORKS

DECK SECTIONS

CR 5149 (CONSTITUTION ROAD) OVER INTRENCHMENT CREEK

DEKALB COUNTY

REVISIONS	BY	DATE

DRAWING NO. 35-004

BRIDGE SHEET 4 OF 5

SCALE: NO SCALE — SEPTEMBER 2015

DESIGNED WBH — CHECKED CLE — REVIEWED AP

DRAWN WBH — DESIGN GROUP — APPROVED DEKALB

1 INCH WHEN PRINTED FULL SIZE

DGN# TIME### DATE###

COUNTY	PROJECT NUMBER	SHEET NO.	TOTAL SHEETS
DEKALB	0012613	22	73

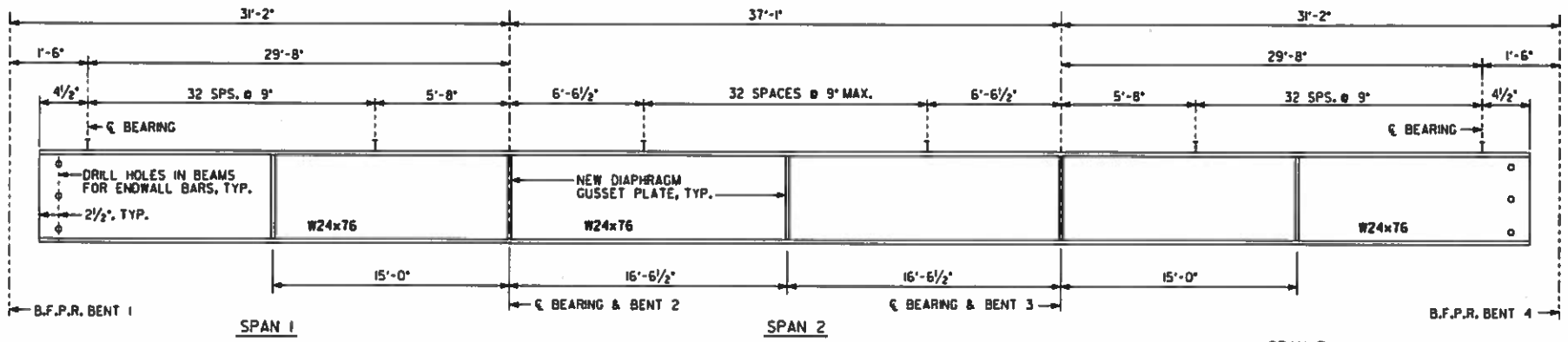

BEAM ELEVATION

DEFLECTIONS DUE TO:

Ⓐ POUR 1 - WEIGHT OF S.I.P. FORMS AND SLAB

Ⓑ POUR 2 - WEIGHT OF S.I.P. FORMS AND SLAB

Ⓒ TOTAL DEFLECTION = Ⓐ + Ⓑ

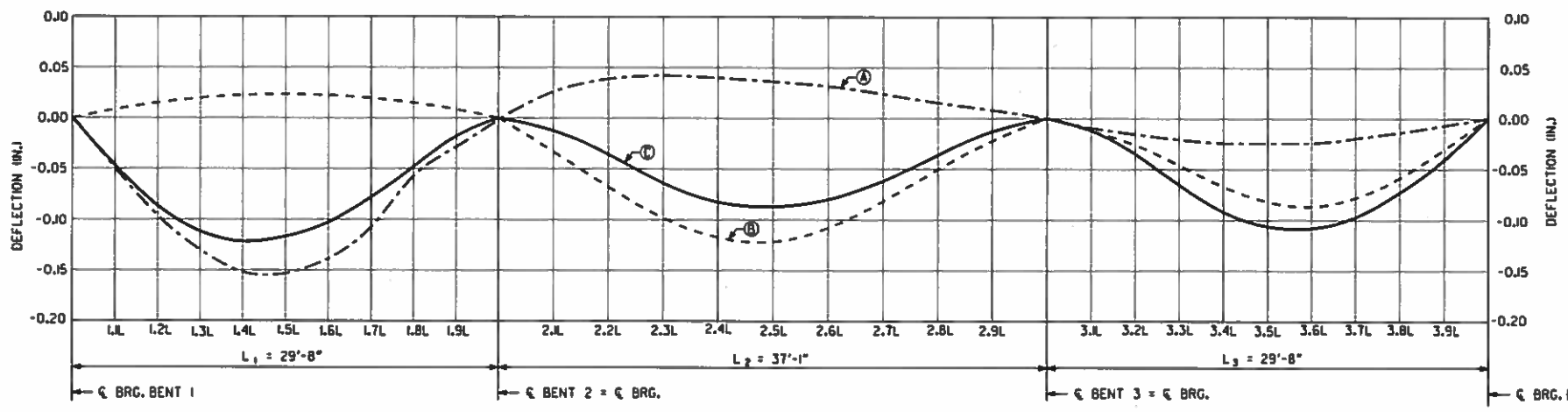

DEAD LOAD DEFLECTION

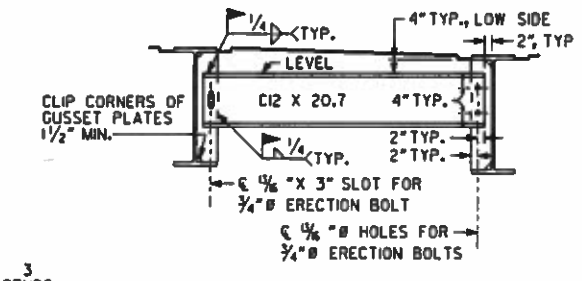

DIAPHRAGM DETAILS

NOTE: WELD DIAPHRAGMS BEFORE DECK IS POURED.

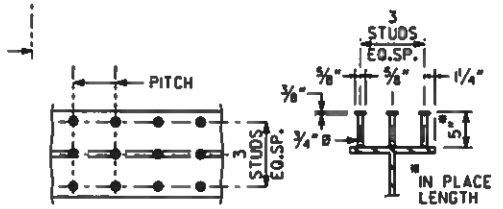

PLAN OF BEAM SECTION OF BEAM

STUD SHEAR CONNECTOR SHALL BE FULLY BUTT WELDED TO TOP FLANGE OF BEAM.

STUD SHEAR CONNECTOR DETAIL

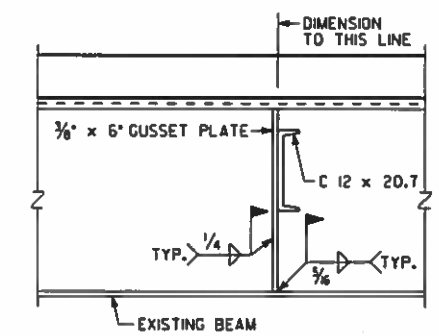

SECTION THRU DIAPHRAGM

NOTES:

1. ALL GUSSET PLATES AND CHANNELS SHALL BE ASTM A709 GRADE 36 STEEL.
2. ALL BEARING ASSEMBLY COMPONENTS SHALL BE ASTM A709 GRADE 36 STEEL.
3. ANCHOR BOLTS, ASR HEX NUTS AND PLATE WASHERS SHALL BE ASTM A276 TYPE 304 STAINLESS STEEL. PROVIDE 2½" MIN. PROJECTION OF ANCHOR BOLT ABOVE TOP OF SOLE PLATE. SET ANCHOR BOLTS 12" INTO CAP.
4. CUT EXISTING ANCHOR BOLTS FLUSH WITH CONCRETE CAP SEAT.
5. LOCATE AND DRILL NEW ANCHOR BOLT HOLES TO AVOID EXISTING CAP REINFORCEMENT. FIELD DRILL HOLES IN ANGLES AS REQUIRED.

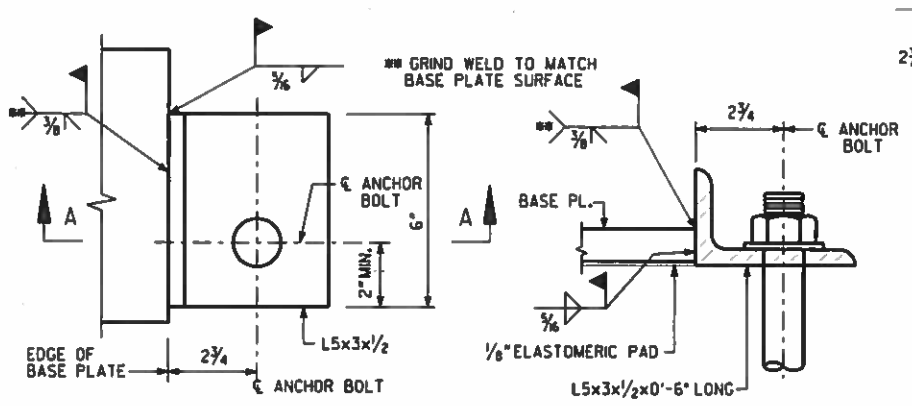

DETAIL A

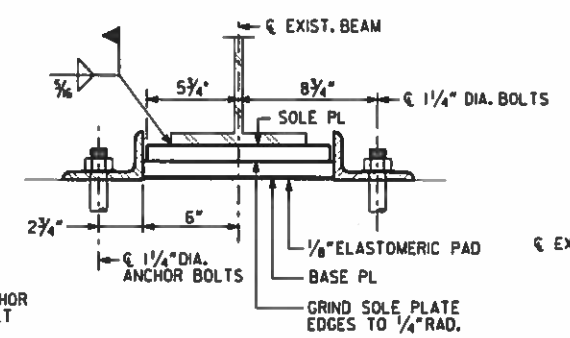

SECTION - BENTS 1 & 4

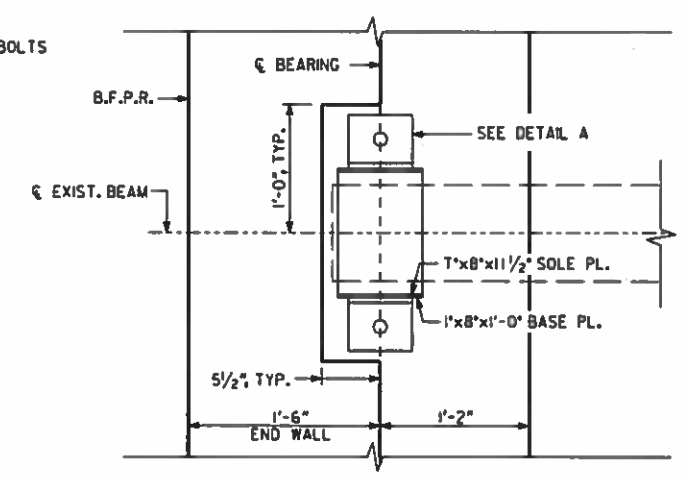

T = CONTRACTOR TO VERIFY AS REQUIRED TO MATCH EXISTING BEARING DEPTH.

BEARING NOTCH PLAN - BENTS 1 & 4

BRIDGE NO. 1

AECOM

DEKALB COUNTY, GEORGIA

DEPARTMENT OF PUBLIC WORKS

STEEL BEAM DETAILS

CR 5149 (CONSTITUTION ROAD) OVER INTRENCHMENT CREEK

DEKALB COUNTY

REVISIONS	BY	DATE

SCALE: NO SCALE — SEPTEMBER 2015

DRAWING NO. 35-005

BRIDGE SHEET 5 OF 5

DESIGNED WBN — CHECKED CLE — REVIEWED AP

DRAWN WBN — DESIGN GROUP — APPROVED DEKALB

1 INCH WHEN PRINTED FULL SIZE

0012613.b122bm.dgn 9:47:17 AM 9/30/2015

COUNTY	PROJECT NUMBER	SHEET NO.	TOTAL SHEETS
DEKALB	0012613	23	73

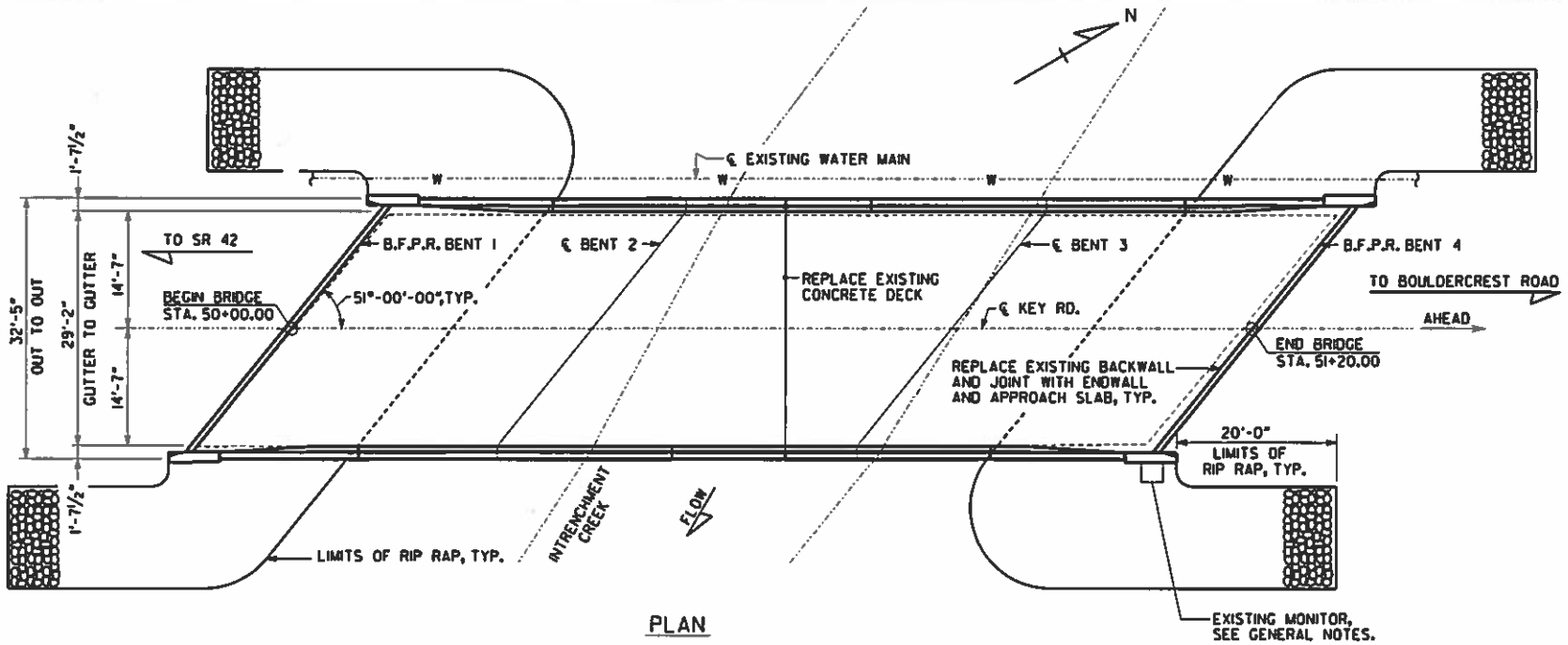

PLAN

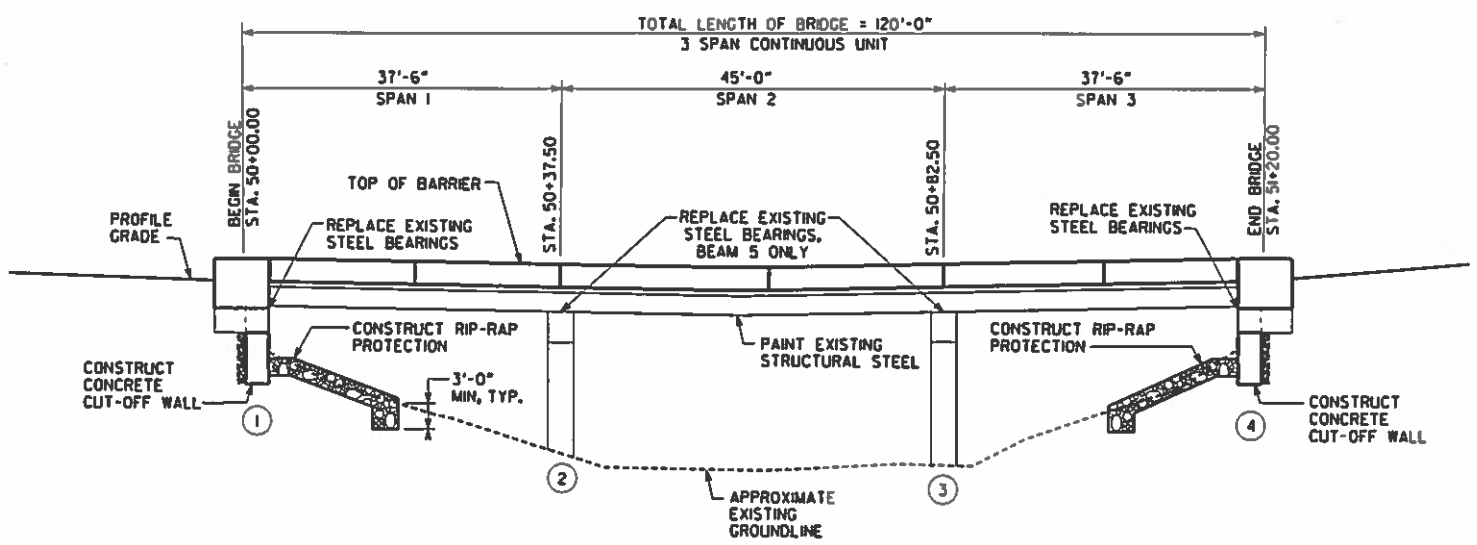

ELEVATION

WORK CONSISTS OF

1. REPLACE EXISTING DECK WITH COMPOSITE REINFORCED CONCRETE DECK.
2. REPLACE EXISTING BACKWALLS WITH NEW CONCRETE ENDWALLS AT BENTS 1 AND 4.
3. REPLACE EXISTING SAFETY CURB WITH CONCRETE BARRIER AND ENDPOSTS.
4. REPLACE EXISTING BEARINGS AT BENTS 1 AND 4, AND AT BENTS 2 AND 3, BEAM 5 ONLY.
5. CONSTRUCT CONCRETE CUT-OFF WALL BELOW BENTS 1 AND 4.
6. INSTALL RIP-RAP PROTECTION AT BENTS 1 AND 4.
7. INSTALL SHEAR STUDS AND STEEL DIAPHRAGMS.
8. CLEAN AND PAINT STRUCTURAL STEEL.
9. CLEAR VEGETATION AND DEBRIS FROM UNDER BRIDGE.

KEY ROAD GRADE DATA

1. THERE ARE NO EXISTING PLANS OR SURVEY DATA AVAILABLE FOR THIS PROJECT. ALL DIMENSIONS SHOWN ARE APPROXIMATE AND MUST BE FIELD VERIFIED.
2. CONTRACTOR SHALL SURVEY THE EXISTING CENTERLINE OF KEY ROAD TO ESTABLISH AN EXISTING PROFILE AT 20 FOOT INTERVALS WITHIN THE LIMITS OF CONSTRUCTION.
3. AFTER REMOVAL OF EXISTING DECK, CONTRACTOR SHALL SURVEY THE TOP OF EACH EXISTING STEEL BEAM AT SUFFICIENT INTERVALS TO ESTABLISH A PROPOSED PROFILE.
4. CONTRACTOR SHALL SUBMIT, FOR APPROVAL BY THE ENGINEER, A PROPOSED PROFILE SHOWING THE INCREASED DECK ELEVATION AND TRANSITION TO THE EXISTING PAVEMENT AS SHOWN ON THE ROADWAY PLANS.
5. THE DECK REPLACEMENT SHALL RAISE THE PROFILE APPROXIMATELY 1½" WITHIN THE LIMITS OF THE BRIDGE.

EXISTING BRIDGE SERIAL NO.	089-0151-0
EXISTING BRIDGE I.D. NO.	089-09120M-001.10N
PROJECT P.I. NO.	0012613

BRIDGE NO. 2

AECOM

DEKALB COUNTY, GEORGIA
DEPARTMENT OF PUBLIC WORKS

PLAN AND ELEVATION
KEY ROAD OVER INTRENCHMENT CREEK

DEKALB COUNTY

SCALE: 1" = 10'-0" SEPTEMBER 2015

DRAWING NO. 35-006
BRIDGE SHEET 1 OF 8

REVISIONS | BY | DATE

DESIGNED WBM | CHECKED CLE | REVIEWED AP
DRAWN WBM | DESIGN GROUP | APPROVED DEKALB

1 INCH WHEN PRINTED FULL SIZE

DGN
TIME$$$
DATE$$$

GENERAL NOTES

SPECIFICATIONS - GEORGIA STANDARD SPECIFICATIONS, 2013 EDITION, AS MODIFIED BY CONTRACT DOCUMENTS. WHERE SPECIFICATIONS REFER TO THE GEORGIA DEPARTMENT OF TRANSPORTATION, DEPARTMENT, OR ENGINEER, IT SHALL ALSO MEAN DEKALB COUNTY.

WORKING DRAWINGS - WHEN SUBMITTING SHOP DRAWINGS FOR THIS PROJECT TO THE DOT GENERAL OFFICE, SUBMIT THEM TO DEKALB COUNTY.

REINFORCING STEEL - PLACE AND TIE ALL REINFORCING STEEL IN ACCORDANCE WITH THE GEORGIA DOT SPECIFICATIONS. DO NOT WELD REINFORCING STEEL.

CHAMFER - CHAMFER ALL EXPOSED CONCRETE EDGES ¾" UNLESS OTHERWISE NOTED.

TEMPORARY SHORING - INCLUDE THE COST OF TEMPORARY SHORING AS NECESSARY FOR BRIDGE CONSTRUCTION IN THE OVERALL BID SUBMITTED.

TRAFFIC CONTROLS - ROAD TO BE CLOSED DURING BRIDGE CONSTRUCTION. SEE ROADWAY PLANS FOR DETOUR, TRAFFIC CONTROLS AND TRAFFIC CONTROL PAYMENT.

EXISTING BRIDGE PLANS - ORIGINAL BRIDGE PLANS ARE NOT AVAILABLE.

DIMENSIONS AND ELEVATIONS - VERIFY ALL DIMENSIONS AND ELEVATIONS IN THE FIELD PRIOR TO ORDERING MATERIALS OR BUILDING FORMS. LIGHT LINES INDICATE THE EXISTING STRUCTURE AND HEAVY LINES INDICATE THE NEW STRUCTURE.

EPOXY RESIN ADHESIVE - APPLY EPOXY RESIN ADHESIVE TYPE II TO ALL HARDENED CONCRETE SURFACES JUST PRIOR TO POURING THE CONCRETE FOR THE NEXT STAGE OF CONSTRUCTION, SEE SECTION 886 OF THE GEORGIA DOT SPECIFICATIONS. INCLUDE THE COST OF EPOXY ADHESIVE AND ITS APPLICATION IN THE OVERALL BID SUBMITTED.

EXISTING RIP RAP - INCLUDE THE COST OF REMOVING, RELAYING, AND/OR REPLACING RIP RAP IN THE PRICE BID FOR STN GROUTED RIP RAP.

ANCHOR BOLTS - PLACE ANCHOR BOLTS IN DRILLED 3" DIAMETER X 12" DEEP HOLES AND GROUT IN PLACE AS PER SUB-SECTION 501.3.05.B.3 OF THE GEORGIA DOT SPECIFICATIONS.

EXISTING UTILITIES - MAINTAIN, PROTECT AND PROVIDE TEMPORARY SUPPORT FOR EXISTING UTILITIES AT ALL TIMES DURING CONSTRUCTION. SUBMIT DETAILS FOR TEMPORARY SUPPORT OF UTILITIES TO THE ENGINEER FOR APPROVAL. INCLUDE THE COST FOR THIS WORK IN THE OVERALL BID SUBMITTED.

GROOVED CONCRETE - GROOVE THE ENTIRE LENGTH OF THE BRIDGE TRANSVERSELY AS PER SUB-SECTION 500.3.05.T.9.C OF THE GEORGIA DOT SPECIFICATIONS.

WELDING - ALL WELDING ON GEORGIA DOT PROJECTS SHALL BE PERFORMED BY CERTIFIED WELDERS THAT HAVE IN THEIR POSSESSION A CURRENT WELDING CERTIFICATION CARD ISSUED BY THE OFFICE OF MATERIALS AND RESEARCH. USE ONLY E70XX (EXCLUDING E7014 AND E7024) LOW HYDROGEN ELECTRODES FOR MANUAL SHIELDED METAL ARC WELDING.

JACKING OF EXISTING BRIDGE - RAISE EXISTING STRUCTURE THE MINIMUM HEIGHT NECESSARY TO REPLACE BEARINGS AT BENTS 1 AND 4, AND AT BENTS 2 AND 3, BEAM 5 ONLY. PERFORM JACKING IN ACCORDANCE WITH THE SPECIAL PROVISIONS. INCLUDE COST FOR THIS WORK IN THE PRICE BID FOR ITEM 518 RAISE EXISTING BRIDGE.

BEARING REPLACEMENT - REPLACE EXISTING BEARINGS AT BENTS 1 AND 4 AND AT BENTS 2 AND 3, BEAM 5 ONLY. INCLUDE THE COST FOR THIS WORK IN THE PRICE BID FOR ITEM 501 STR STEEL.

SALVAGE MATERIAL - NO MATERIAL REMOVED FROM THE EXISTING STRUCTURE SHALL BE SALVAGED FOR USE BY DEKALB COUNTY.

BRIDGE DECK PROFILE - SURVEY THE EXISTING DECK PRIOR TO DECK REMOVAL. SURVEY THE TOP OF EXISTING GIRDERS AFTER THE DECK IS REMOVED. SUBMIT CALCULATIONS FOR DECK FORM ORDINATES TO THE ENGINEER FOR APPROVAL PRIOR TO POURING THE DECK. INCLUDE THE COST FOR THIS WORK IN THE OVERALL BID SUBMITTED.

INCIDENTAL ITEMS - INCLUDE THE COST INCIDENTAL TO THE WORK THAT IS NOT SPECIFICALLY COVERED BY THE GEORGIA STANDARD SPECIFICATIONS, SUPPLEMENTAL SPECIFICATIONS AND/OR SPECIAL PROVISIONS IN THE OVERALL BID SUBMITTED. THIS INCLUDES THE COST OF CLEANING AND BENDING OF EXISTING REINFORCEMENT, WATERPROOFING, JOINT FILLERS, AND OTHER INCIDENTAL ITEMS NECESSARY TO COMPLETE THE WORK.

REMOVAL OF PARTS OF EXISTING BRIDGE - INCLUDE THE COST FOR REMOVAL OF PORTIONS OF EXISTING DECK SLAB, SAFETY CURBS, RAILINGS AND BACKWALLS IN THE PRICE BID FOR ITEM 540 REMOVAL OF PARTS OF EXISTING BRIDGE.

SHEAR CONNECTORS - REMOVE EXISTING SHEAR CONNECTORS. FURNISH AND INSTALL NEW SHEAR CONNECTORS IN ACCORDANCE WITH SECTION 512 OF THE GEORGIA DOT SPECIFICATIONS. PROVIDE SHEAR CONNECTORS MEETING THE MINIMUM REQUIREMENTS OF THE STEEL GRID DECK MANUFACTURER AND THE MINIMUM SIZE AND SPACING AS SHOWN ON PLANS. INCLUDE COST FOR THIS WORK IN THE PRICE BID FOR COMPOSITE STEEL GRID DECK WITH PRECAST CONCRETE SLAB.

EXISTING STRUCTURAL STEEL - ALL EXISTING STEEL WHICH IS DISTURBED OR DAMAGED IN ANY WAY DURING CONSTRUCTION SHALL BE STRAIGHTENED AND/OR REPAIRED UNDER THE SUPERVISION OF THE INSPECTION SECTION OF THE OFFICE OF MATERIALS, AND CLEANED AND REPAIRED PER THE GEORGIA DOT SPECIFICATIONS.

VEGETATION - CUT AND REMOVE VEGETATION FROM AROUND SUBSTRUCTURE AND APPROACHES, 5 FT FROM OUTSIDE EDGE OF BRIDGE OPENING. CUT AND REMOVE TREES TO GROUNDLINE. APPLY APPROVED HERBICIDE TO KILL ROOT SYSTEM. INCLUDE COST OF REMOVAL AND MATERIALS IN THE OVERALL BID SUBMITTED.

STREAM MONITORING STATION - AT LEAST FOUR WEEKS PRIOR TO DECK REMOVAL OPERATIONS, CONTACT DEKALB COUNTY TO COORDINATE THE REMOVAL, STORAGE AND RE-INSTALLATION OF THE EQUIPMENT ON THE NEW BRIDGE END POST. INCLUDE THE COST OF REMOVAL AND RESETTING EQUIPMENT IN THE OVERALL BID FOR THE CONTRACT ITEMS.

PAINTING NOTES:

1. CLEAN AND PAINT ALL NEW AND EXISTING STRUCTURAL STEEL IN ACCORDANCE WITH SECTION 535 OF THE GEORGIA DOT SPECIFICATIONS, PAINTING STRUCTURES. SYSTEM XII PAINT SHALL BE USED ON ALL EXPOSED SUPERSTRUCTURE STEEL.
2. THE STRUCTURE IS 120 FT. LONG +/- WITH A TOTAL ESTIMATED AREA OF STEEL TO BE PAINTED OF 5,200 SF. PRIOR TO BIDDING, IT IS THE RESPONSIBILITY OF THE CONTRACTOR TO MEASURE AND VERIFY THE AREA OF STEEL TO BE PAINTED.
3. THE EXISTING PAINT ON THE BRIDGE STRUCTURAL STEEL IS A LEAD-BASED PAINT SYSTEM.
4. AFTER THE PAINTING IS COMPLETED, STENCIL THE SERIAL NUMBER (089-0151-0) OF THE BRIDGE ON THE INSIDE FACE OF THE WEB OF THE FAR RIGHT BEAM NEAR BOTH THE FIRST AND THE LAST BENT (BOTH ENDS OF BRIDGE). USE A 5" HIGH NUMBER STENCIL AND BLACK PERMANENT PAINT. COSTS ASSOCIATED WITH THIS WORK, INCLUDING MATERIALS AND LABOR, ARE TO BE INCLUDED IN THE OVERALL BID SUBMITTED.
5. NO MODIFICATION OF THE EXISTING STRUCTURAL STEEL IS ALLOWED, INCLUDING BUT NOT LIMITED TO PUNCTURING, CUTTING, WELDING, OR OTHER OPERATIONS WHICH MODIFY THE STRUCTURAL INTEGRITY OF THE BRIDGE. REPAIR ANY DAMAGES TO THE STRUCTURAL STEEL CAUSED BY THE BLAST CLEANING OR ANY OTHER RELATED OPERATIONS, AT NO CHARGE TO THE DEPARTMENT. ALL REPAIRS ARE TO BE APPROVED BY THE ENGINEER.
6. PROTECT ALL EXISTING UTILITIES FROM DAMAGE CAUSED BY THE BLAST CLEANING, PAINT OVERSPRAY, OR ANY OTHER RELATED OPERATIONS. REPAIR ANY DAMAGE AT NO ADDITIONAL EXPENSE TO THE COUNTY.
7. ALL CONCRETE AND DECK WORK SHALL BE COMPLETED PRIOR TO BEGINNING PAINTING WORK.
8. THE COST OF PAINTING NEW AND EXISTING STRUCTURAL STEEL SHALL BE INCLUDED IN THE PRICE BID FOR PAINT EXISTING STEEL STRUCTURE.

CONSTRUCTION SEQUENCE

1. INSTALL DETOUR.
2. REMOVE EXISTING DECK, RAILINGS AND BACKWALL.
3. JACK AND REPLACE END BENT BEARINGS, AND BEARINGS AT BENTS 2 & 3, BEAM 5 ONLY.
4. REPAIR END BENT PILES.
5. CONSTRUCT CUT-OFF WALL.
6. RECONSTRUCT ENDROLL AND INSTALL RIP RAP EMBANKMENT.
7. INSTALL STEEL DIAPHRAGMS.
8. CONSTRUCT CONCRETE DECK AND ENDWALLS.
9. PAINT BRIDGE.
10. BACKFILL AND COMPACT FILL BEHIND END BENTS.
11. INSTALL NEW APPROACH SLABS.
12. COMPLETE ROADWAY PAVING AND GUARDRAIL.
13. OPEN BRIDGE TO TRAFFIC.

IN LIEU OF THE ABOVE CONSTRUCTION SEQUENCE, THE CONTRACTOR MAY SUBMIT AN ALTERNATE CONSTRUCTION SEQUENCE FOR APPROVAL.

BRIDGE CONSISTS OF

1 - 3 SPAN W BEAM CONTINUOUS UNIT (37'-6", 45'-0", 37'-6") ---------- EXISTING

2 - CONCRETE INTERMEDIATE BENTS ---------- EXISTING

2 - STEEL H PILE END BENTS ---------- EXISTING

4 - END POST AND GUARDRAIL ATTACHMENT DETAIL (L = MATCH EXISTING WINGWALL; W = 1'-3"; H = 2'-8") ------- GA. STD. 3054 (9-30-02)

BAR BENDING DETAILS ---------- GA. STD. 3901 (8-69)

TYPICAL FILL DETAIL AT END OF BRIDGE ---------- GA. STD. 9037 (10-20-97)

DESIGN DATA

SPECIFICATIONS ---------- AASHTO (7TH EDITION, 2002

TYPICAL HS20-44 LOADING (DECK ONLY) ---------- IMPACT ALLOWED

FUTURE PAVING ALLOWANCE (DECK ONLY) ---------- 30 PSF

CONCRETE: CLASS AA ---------- f'_c = 3,500 PSI
CLASS A ---------- f'_c = 3,000 PSI

REINFORCEMENT STEEL ---------- GRADE 60, f_y = 60,000 PSI

STRUCTURAL STEEL ---------- ASTM A709, GRADE 36

EXISTING UTILITIES

WATER MAIN ---------- DEKALB COUNTY

STREAM MONITOR ---------- DEKALB COUNTY

SUMMARY OF QUANTITIES

PAY ITEM NUMBER	QUANTITY	UNIT	PAY ITEM
500-0100	365	SY	GROOVED CONCRETE
500-1006	116	CY	SUPERSTR CONCRETE, CL AA, BR NO - 2
500-2100	228	LF	CONCRETE BARRIER
500-3101	32	CY	CLASS A CONCRETE
501-3000	9000	LB	STR STEEL, BR NO - 2
511-1000	2000	LB	BAR REINF STEEL
511-3000	30600	LB	SUPERSTR REINF STEEL, BR NO - 2
518-1000	LUMP	LS	RAISE EXISTING BRIDGE, STA - 50+60
535-1105	LUMP	LS	PAINT EXIST STEEL STRUCTURE, BR ID - 089-09120M-001.10N
540-1202	LUMP	LS	REMOVAL OF PARTS OF EXISTING BR, BR NO - 2
603-1224	720	SY	STN GROUTED RIP RAP, 24 IN
603-7000	720	SY	PLASTIC FILTER FABRIC

BRIDGE NO. 2

AECOM

DEKALB COUNTY, GEORGIA
DEPARTMENT OF PUBLIC WORKS

GENERAL NOTES
KEY ROAD OVER INTRENCHMENT CREEK

DEKALB COUNTY

SCALE: NO SCALE — SEPTEMBER 2015

DESIGNED WBN — CHECKED CLE — REVIEWED AP
DRAWN WBN — DESIGN GROUP — APPROVED DEKALB

DRAWING NO. 35-007
BRIDGE SHEET 2 OF 8

REVISIONS — DATE — BY

1 INCH WHEN PRINTED FULL SIZE

0012613.b224gn.dgn 1:00:58 PM 1/19/2016

COUNTY	PROJECT NUMBER	SHEET NO.	TOTAL SHEETS
DEKALB	0012613	25	73

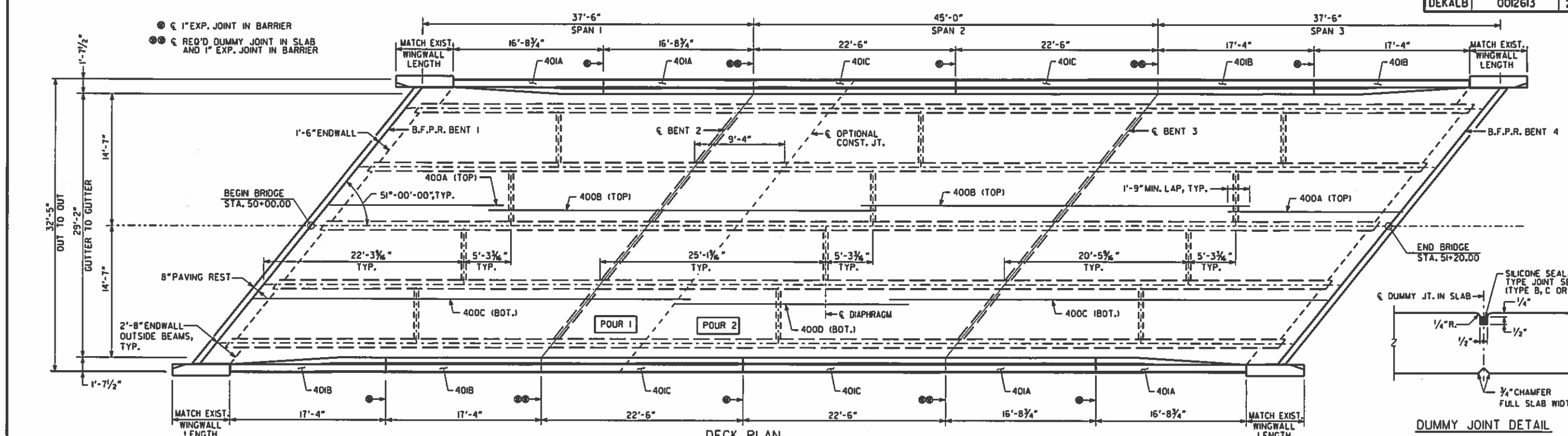

DECK PLAN

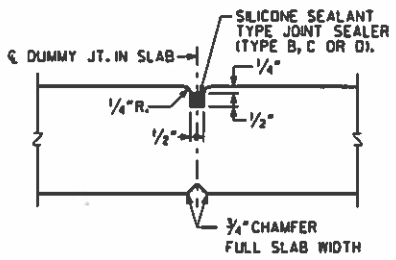

DUMMY JOINT DETAIL

SUPERSTRUCTURE QUANTITIES

ITEM	SPAN 1	SPAN 2	SPAN 3	TOTAL
LUMP - CY SUPERSTR CONCRETE, CLASS AA	40.0	36.0	40.0	116.0
LUMP - LB SUPERSTR REINF STEEL	10,800	9,000	10,800	30,600

NOTE: END POST CONCRETE AND BAR REINFORCEMENT STEEL INCLUDED IN END SPAN QUANTITIES.

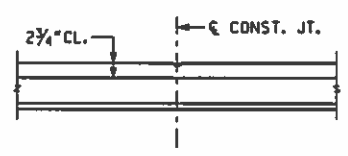

CONST. JT. IN SLAB DETAIL

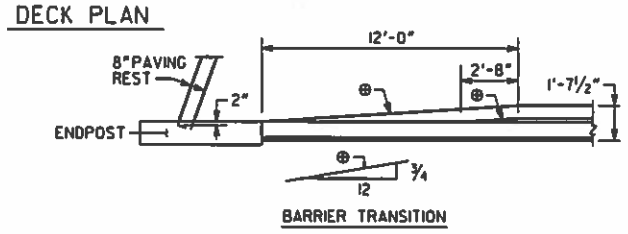

BARRIER TRANSITION

BARRIER TRANSITION DETAIL

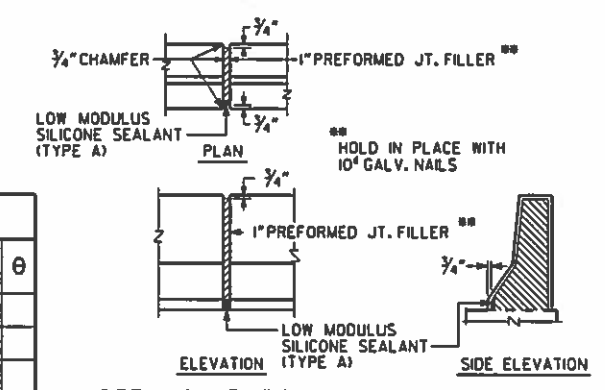

DETAILS OF 1" EXPANSION JOINT IN BARRIER

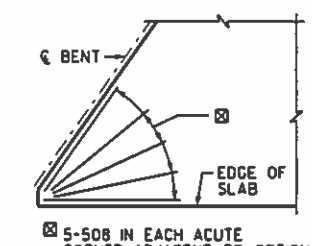

⊠ 5-508 IN EACH ACUTE CORNER ADJACENT TO OPTIONAL CONSTRUCTION JOINT, TYP.

SKEWED CORNER DETAIL

REINFORCING SCHEDULE

LOCATION	NO. OF LOC.	MARK	LENGTH FT.	LENGTH IN.	NO. BARS REQ'D.	TYPE	A	G	B FT.	B IN.	C FT.	C IN.	D FT.	D IN.	E FT.	E IN.	F FT.	F IN.	H FT.	H IN.	N	θ
SPAN 1 OR 3	2																					
		400A	19	6	25	1																
		400B	43	3	25	1																
		400C	48	9	48	1																
		401A	16	5	12	1																
		401B	17	0	12	1																
		401P	5	5	14	1																
		402	5	10	70	3			5	0	0	10										
		404	41	4	3	1																
		405	3	9	6	1																
		405A	9	9	4	35	6	6	6	3	0	0	1	6	1	2	0	0	1	10		
		405B	10	0	4	23			1	0	6	3	2	9								49
		406	5	0	8	1																
		407	5	5	2	1																
		500	33	6	70	2			31	10	0	10	0	10								
		501	32	1	70	1																
		501P	15	8	12	50	3	3	6	3	1	4	4	11	0	4	0	7	0	11		
		503A	6	9	72	23			0	9	3	0	3	0								96
		503B	4	11	72	23			0	5	2	3	2	3								84

REINFORCING SCHEDULE

LOCATION	NO. OF LOC.	MARK	LENGTH FT.	LENGTH IN.	NO. BARS REQ'D.	TYPE	A	G	B FT.	B IN.	C FT.	C IN.	D FT.	D IN.	E FT.	E IN.	F FT.	F IN.	N	θ
		504	5	6	30	46			1	10	2	0	0	3	1	0	1	0		
		505	40	9	1	1														
		506	4	8	56	3			2	8	2	0								
		506A	2	11	24	24			1	3	0	10	0	10	0	7	0	7		
		507	4	4	6	3			2	6	1	10								
		508	10	0	10	1														
		800	41	4	3	1														
		701P	5	5	14	1														
SPAN 2	1																			
		400D	26	0	48	1														
		401C	22	2	24	1														
		402	5	10	82	3			5	0	0	10								
		500	33	6	84	2			31	10	0	10	0	10						
		501	32	1	84	1														
		503A	6	9	96	23			0	9	3	0	3	0						96
		503B	4	11	96	23			0	5	2	3	2	3						84
		508	10	0	10	1														

BRIDGE NO. 2

AECOM

DEKALB COUNTY, GEORGIA
DEPARTMENT OF PUBLIC WORKS

DECK PLAN
KEY ROAD OVER INTRENCHMENT CREEK

DEKALB COUNTY

SCALE: NO SCALE — SEPTEMBER 2015

DRAWING NO. 35-008
BRIDGE SHEET 3 OF 8

REVISIONS — BY — DATE

DESIGNED WBN — DRAWN WBN — CHECKED GLE — DESIGN GROUP — REVIEWED AP — APPROVED DEKALB

1 INCH WHEN PRINTED FULL SIZE

0012613.b225dp.dgn
8:36:37 AM
9/3/2015

COUNTY	PROJECT NUMBER	SHEET NO.	TOTAL SHEETS
DEKALB	0012613	26	73

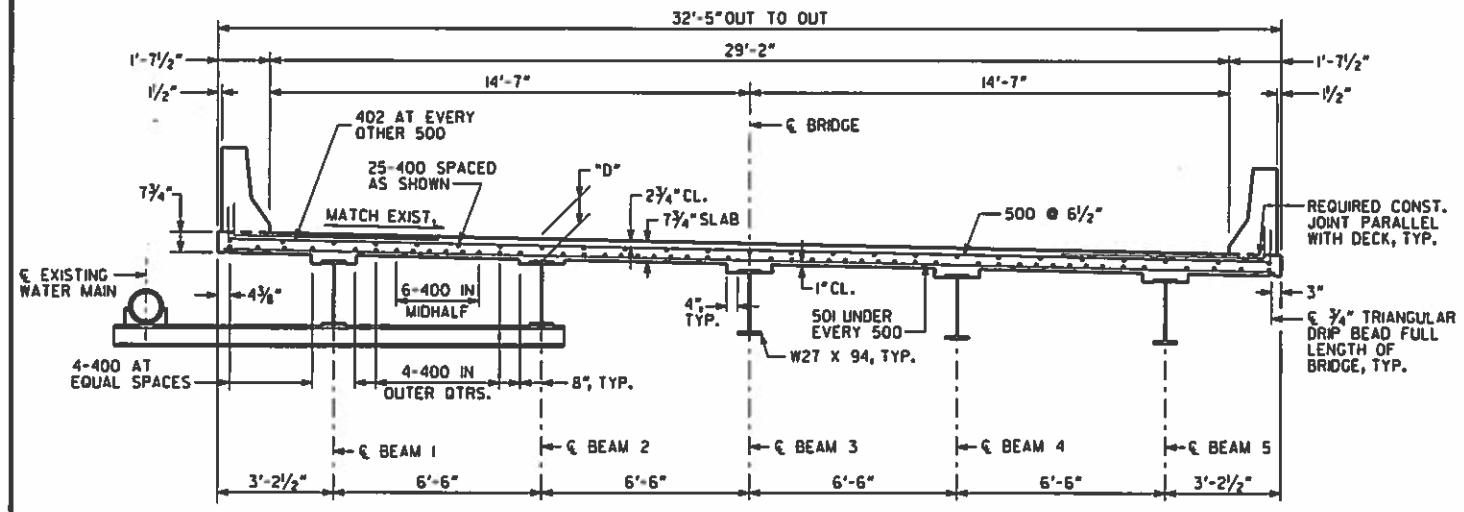

SECTION THRU SLAB

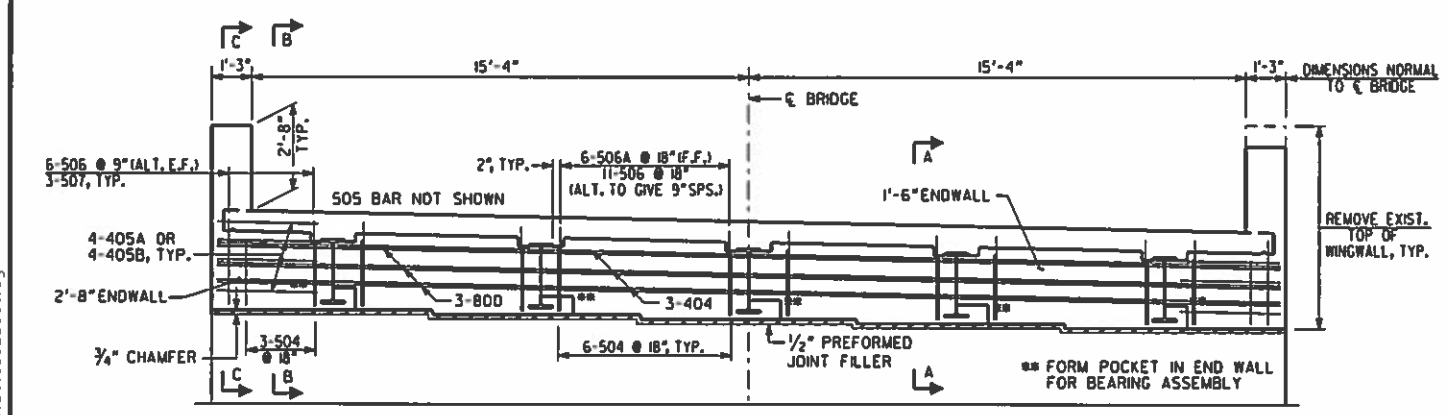

SECTION THRU ENDWALL

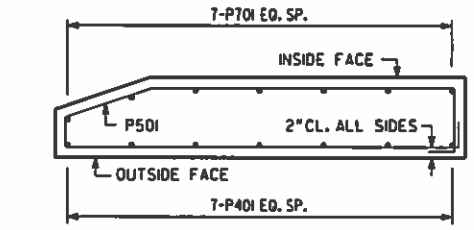

SECTION D-D

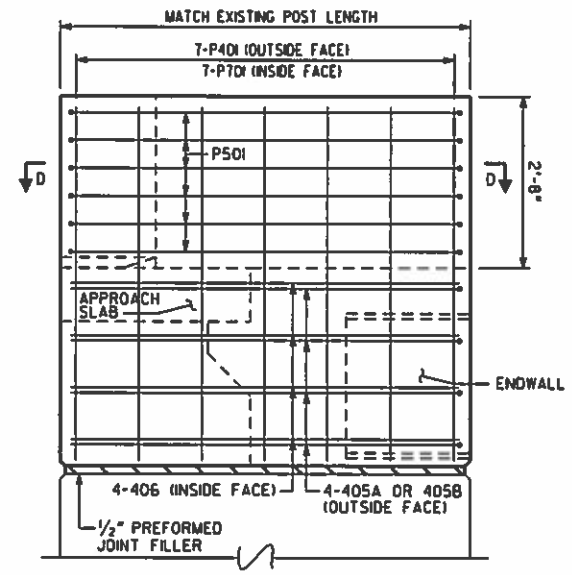

SECTION C-C

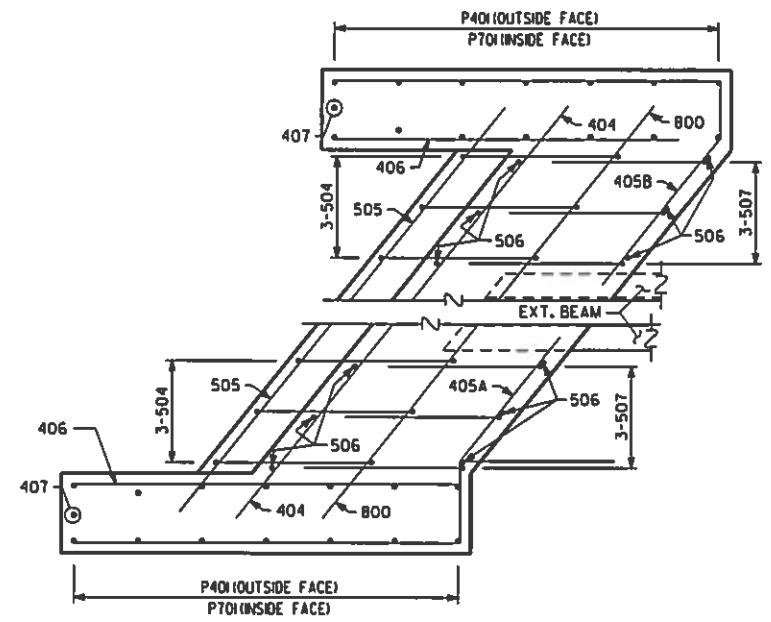

ENDWALL PLAN

BENT 1 SHOWN
(BENT 4 SIMILAR)

NOTES:

1. DIMENSION "D" IS MEASURED FROM TOP OF SLAB TO TOP OF BEAM AT CENTERLINE OF BEARING.
   "D" = 8½"
2. VARY "D" BETWEEN BEARINGS TO COMPENSATE FOR DEAD LOAD DEFLECTION AND VERTICAL CURVE.
3. MAINTAIN A CONSTANT SLAB THICKNESS AS INDICATED ON SECTIONS BETWEEN BEAMS AND IN OVERHANGS.
4. MAINTAIN 2" CL. ON ALL REINFORCEMENT UNLESS OTHERWISE NOTED.
5. CUT EXISTING BACKWALL REINFORCING STEEL LEVEL WITH END BENT CAP SEAT PRIOR TO CONSTRUCTING ENDWALL.
6. THE CONTRACTOR SHALL PROVIDE BRACING BETWEEN THE EXTERIOR BEAM AND THE FIRST INTERIOR BEAM UNTIL THE DECK HAS BEEN POURED, THE OVERHANG FORMS HAVE BE REMOVED AND THE DIAPHRAGMS WELDED. ALL COSTS FOR DESIGNING, PROVIDING, INSTALLING AND REMOVING BRACING SHALL BE INCLUDED IN PRICE BID FOR LUMP - STRUCTURAL STEEL.

* TAPERS TO 0" AT END POST

** AT CONTRACTOR'S OPTION, 10" RADIUS MAY BE REPLACED BY STRAIGHT INTERSECTING SLOPES.

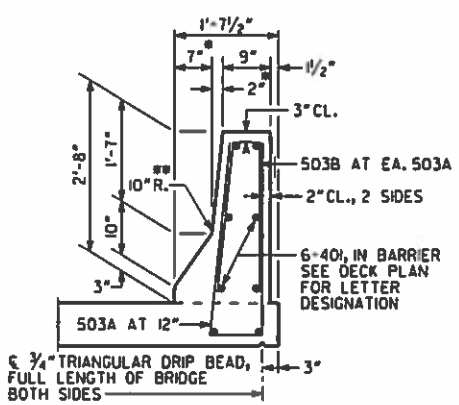

BARRIER DETAIL

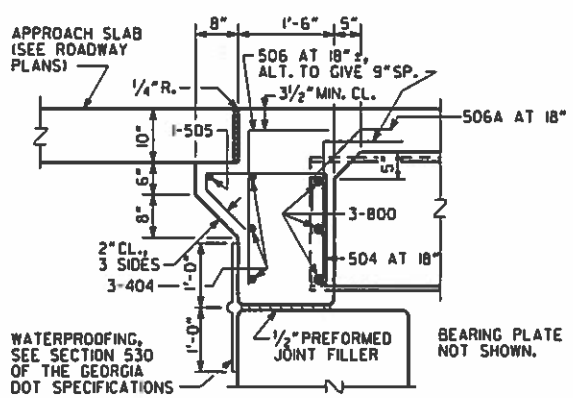

SLAB REINFORCEMENT NOT SHOWN.

SECTION A-A

* DRILL HOLES FOR 800 BARS

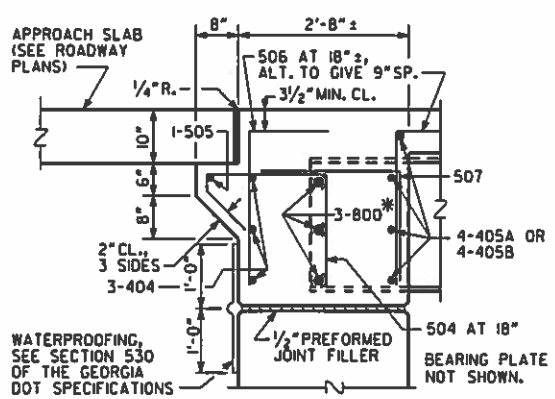

SLAB REINFORCEMENT NOT SHOWN.

SECTION B-B

* DRILL HOLES FOR 800 BARS

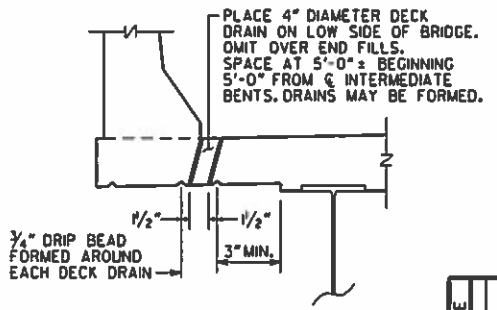

DECK DRAIN DETAIL

BRIDGE NO. 2

AECOM

DEKALB COUNTY, GEORGIA
DEPARTMENT OF PUBLIC WORKS

DECK SECTIONS
KEY ROAD OVER INTRENCHMENT CREEK

DEKALB COUNTY

DATE	REVISIONS	BY

DRAWING NO. 35-009
BRIDGE SHEET 4 OF 8

SCALE: NO SCALE — SEPTEMBER 2015

DESIGNED WBN — CHECKED CLE — REVIEWED AP
DRAWN WBN — DESIGN GROUP — APPROVED DEKALB

1 INCH WHEN PRINTED FULL SIZE

0012613.b226ds.dgn 9:53:45 AM 9/30/2015

COUNTY	PROJECT NUMBER	SHEET NO.	TOTAL SHEETS
DEKALB	0012613	27	73

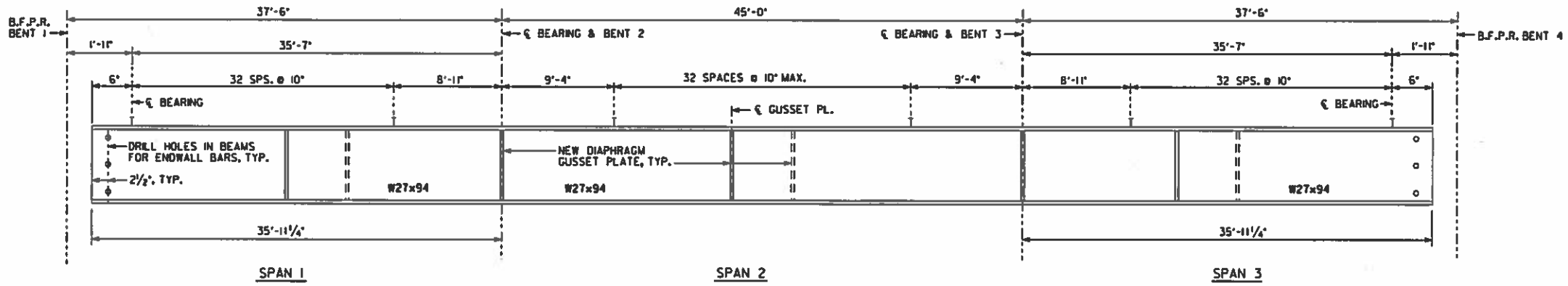

BEAM ELEVATION

DEFLECTIONS DUE TO:

Ⓐ POUR 1 - WEIGHT OF S.I.P. FORMS AND SLAB

Ⓑ POUR 2 - WEIGHT OF S.I.P. FORMS AND SLAB

Ⓒ TOTAL DEFLECTION = Ⓐ + Ⓑ

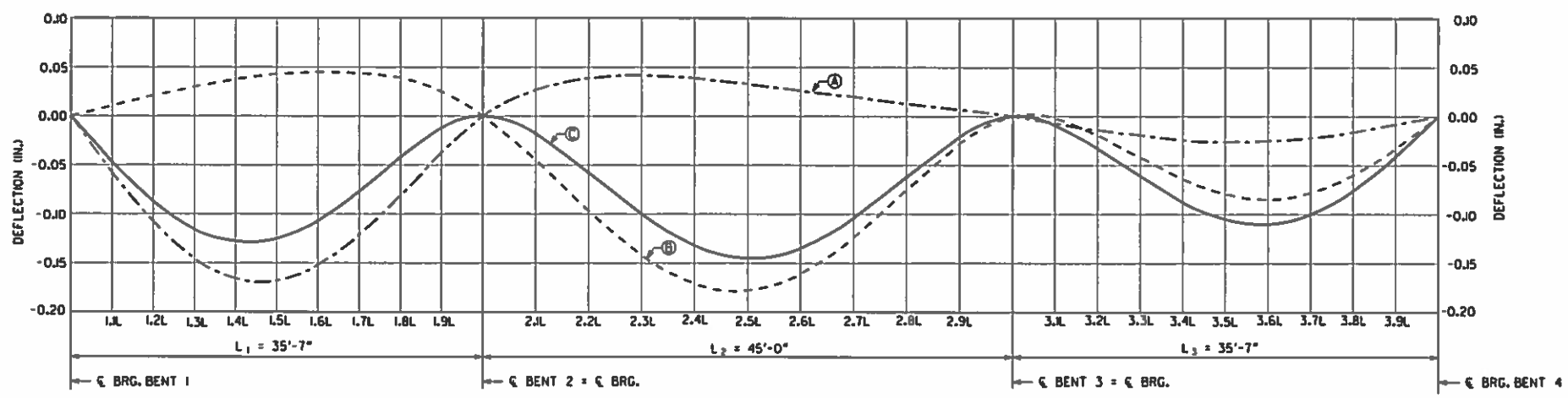

DEAD LOAD DEFLECTION

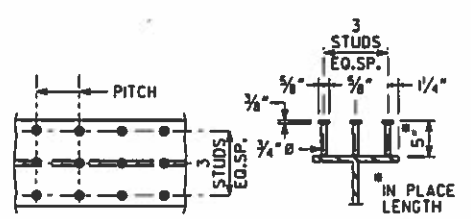

PLAN OF BEAM SECTION OF BEAM

STUD SHEAR CONNECTOR SHALL BE FULLY BUTT WELDED TO TOP FLANGE OF BEAM.

STUD SHEAR CONNECTOR DETAIL

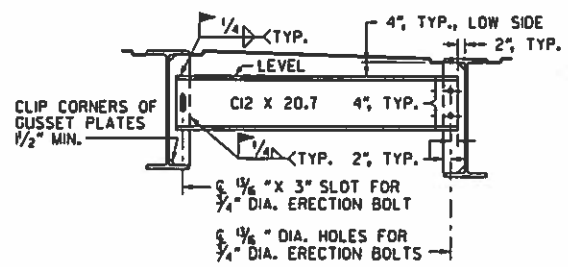

DIAPHRAGM DETAILS

NOTE: WELD DIAPHRAGMS BEFORE DECK IS POURED.

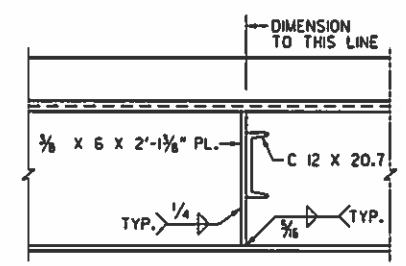

SECTION THRU DIAPHRAGM

NOTE:

1. ALL GUSSET PLATES AND CHANNELS SHALL BE ASTM A709 GRADE 36 STEEL.

BRIDGE NO. 2

AECOM

DEKALB COUNTY, GEORGIA

DEPARTMENT OF PUBLIC WORKS

STEEL BEAM DETAILS

KEY ROAD OVER INTRENCHMENT CREEK

DEKALB COUNTY

REVISIONS	BY	DATE

DRAWING NO. 35-010

BRIDGE SHEET 5 OF 8

SCALE: NO SCALE

SEPTEMBER 2015

DESIGNED WBN | CHECKED CLE | REVIEWED AP

DRAWN WBN | DESIGN GROUP | APPROVED DEKALB

1 INCH WHEN PRINTED FULL SIZE

0012613_b227bm.dgn 9:59:40 AM 9/30/2015

COUNTY	PROJECT NUMBER	SHEET NO.	TOTAL SHEETS
DEKALB	0012613	28	73

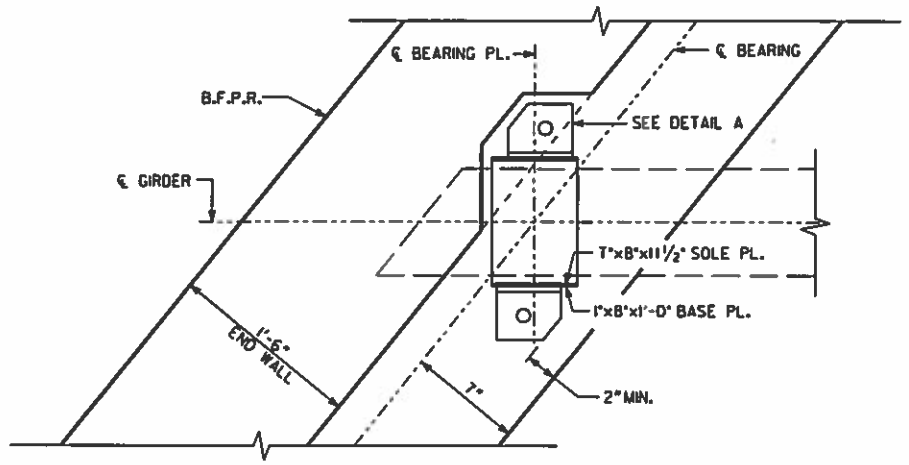

T = CONTRACTOR TO VERIFY AS REQUIRED TO MATCH EXISTING BEARING DEPTH.

PLAN - BENTS 1 & 4

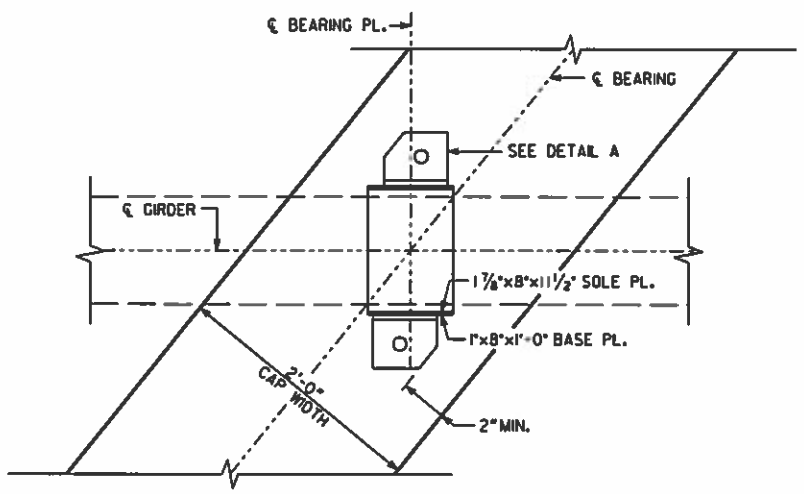

PLAN - BENT 2, BEAM 5

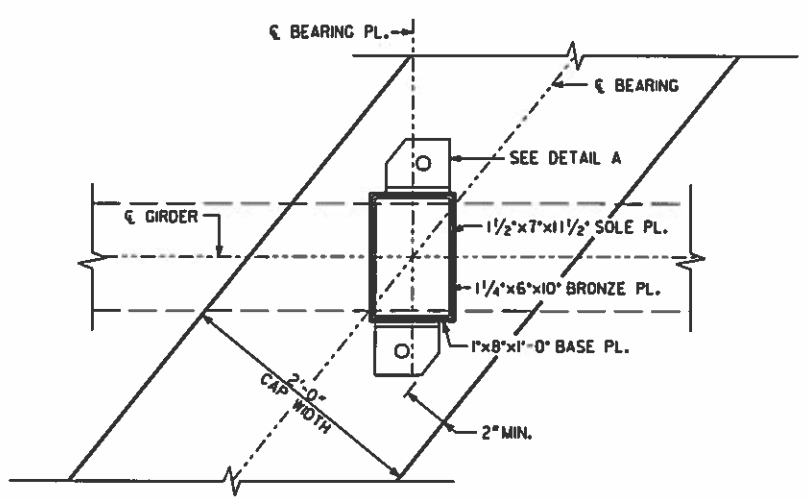

PLAN - BENT 3, BEAM 5

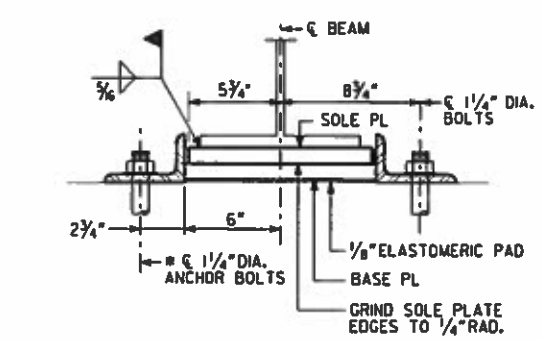

2-PLATE BEARING SECTION

BENT 2, BEAM 5 AND BENTS 1 & 4, ALL BEAMS

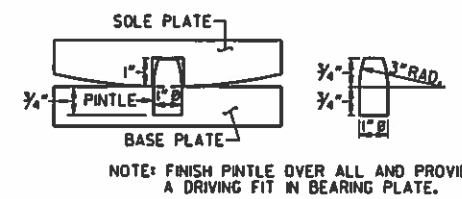

NOTE: FINISH PINTLE OVER ALL AND PROVIDE A DRIVING FIT IN BEARING PLATE.

PINTLE DETAIL

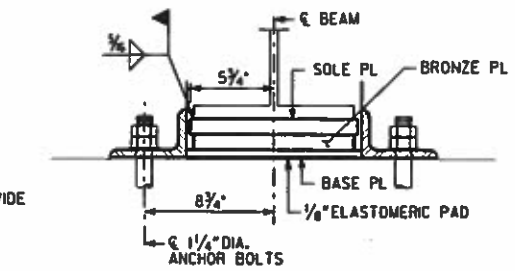

3-PLATE BEARING SECTION

BENT 3, BEAM 5

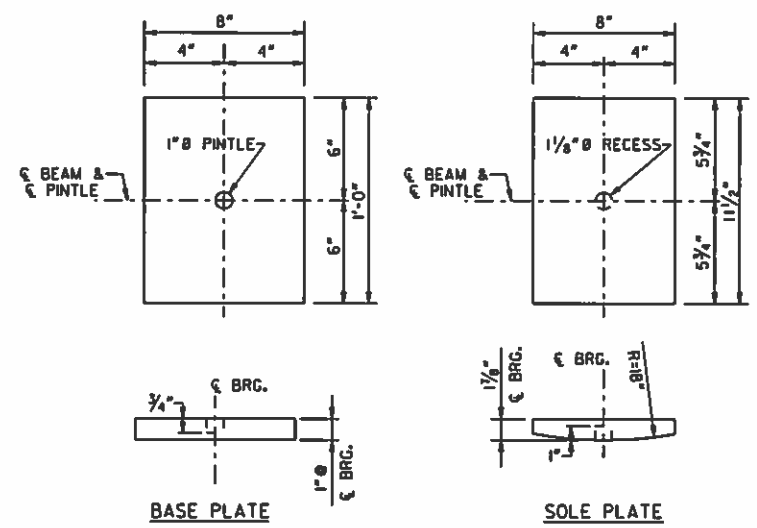

BASE PLATE

SOLE PLATE

FIXED BEARING ASSEMBLY

BENT 2, BEAM 5

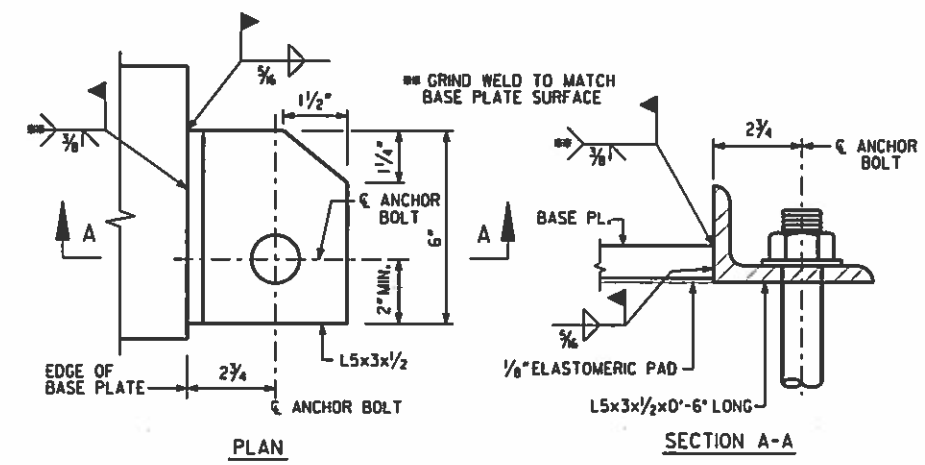

PLAN

SECTION A-A

DETAIL A

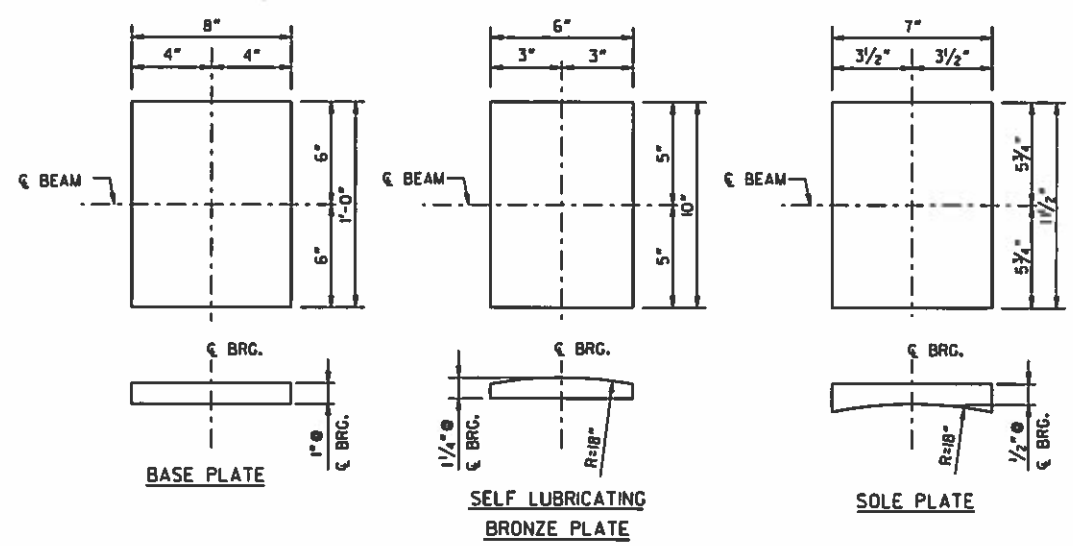

EXPANSION BEARING ASSEMBLY

BENT 3, BEAM 5

NOTES:

1. ALL BEARING ASSEMBLY COMPONENTS SHALL BE ASTM A709 GRADE 36 STEEL.
2. ANCHOR BOLTS, ASR HEX NUTS AND PLATE WASHERS SHALL BE ASTM A276 TYPE 304 STAINLESS STEEL. PROVIDE 2½" MIN. PROJECTION OF ANCHOR BOLT ABOVE TOP OF ANGLE. SET ANCHOR BOLTS 12" INTO CAP.
3. CUT EXISTING ANCHOR BOLTS FLUSH WITH CONCRETE CAP SEAT.
4. LOCATE AND DRILL NEW ANCHOR BOLT HOLES TO AVOID EXISTING CAP REINFORCEMENT. FIELD DRILL HOLES IN ANGLES AS REQUIRED.

BRIDGE NO. 2

AECOM

DEKALB COUNTY, GEORGIA

DEPARTMENT OF PUBLIC WORKS

BEARING DETAILS

KEY ROAD OVER INTRENCHMENT CREEK

DEKALB COUNTY

DATE	REVISIONS	BY

DRAWING NO. 35-011

BRIDGE SHEET 6 OF 8

SCALE: NO SCALE

SEPTEMBER 2015

DESIGNED WBN | CHECKED CLE | REVIEWED AP

DRAWN WBN | DESIGN GROUP | APPROVED DEKALB

1 INCH WHEN PRINTED FULL SIZE

0012613 b228bridg.dgn 11:31:00 AM 9/1/2015

COUNTY	PROJECT NUMBER	SHEET NO.	TOTAL SHEETS
DEKALB	0012613	29	73

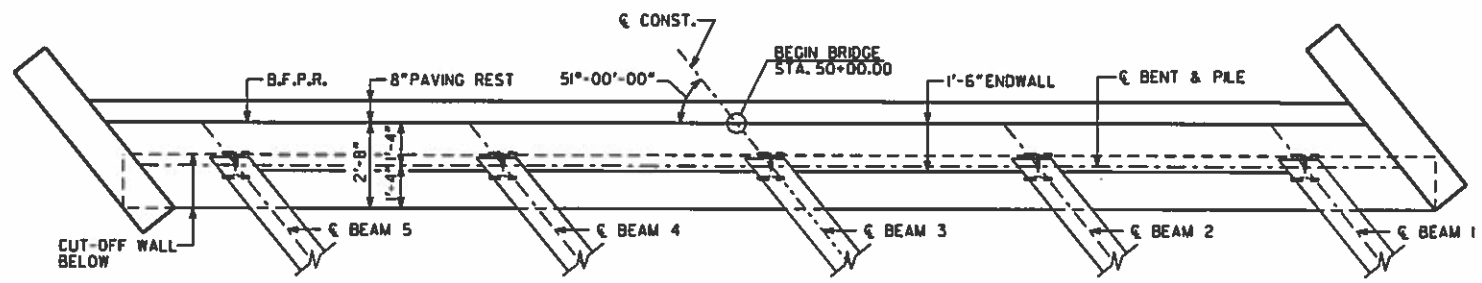

PLAN
BENT 1

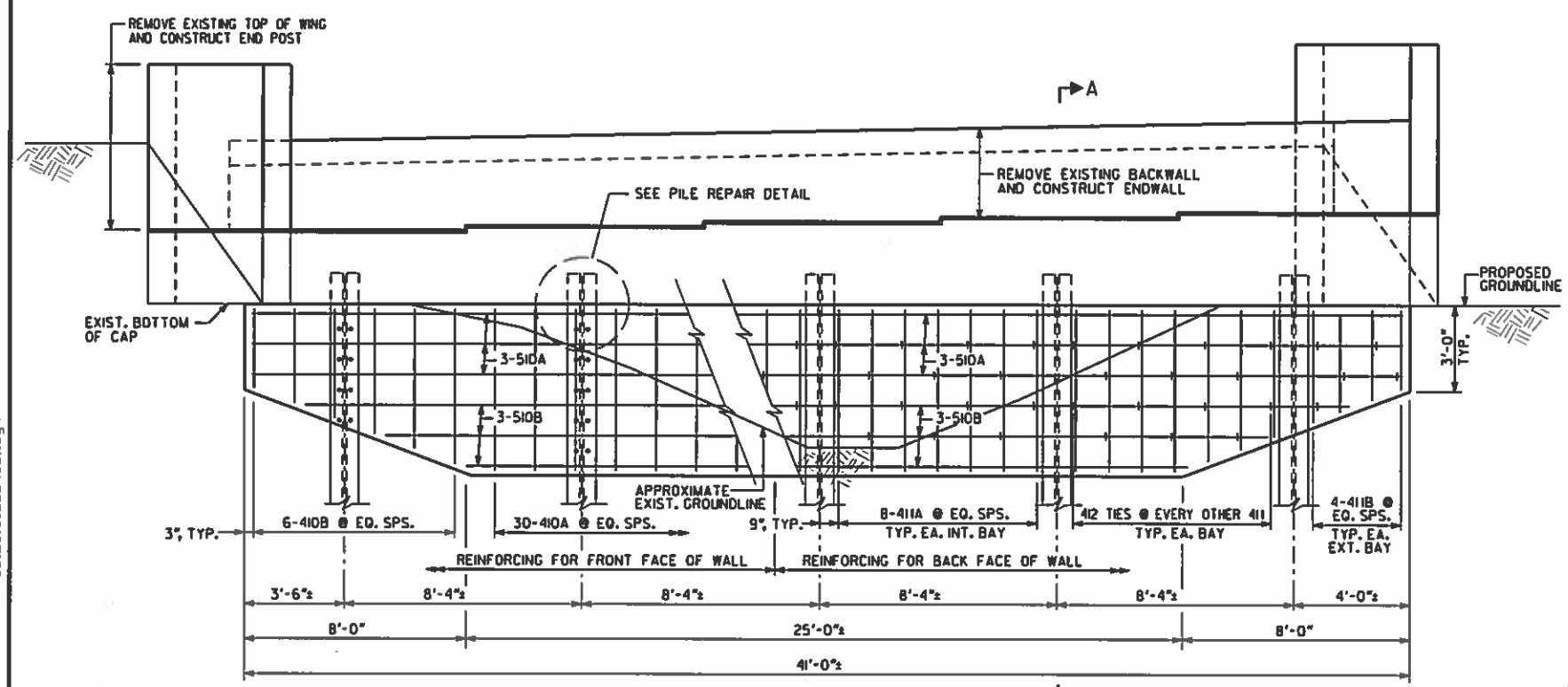

ELEVATION
LOOKING BACK

NOTE:
MAINTAIN 2"CL. ON ALL REINFORCEMENT UNLESS OTHERWISE NOTED.

SUBSTRUCTURE QUANTITIES	
ITEM	BENT 1
CY CLASS A CONCRETE	16.0
LB BAR REINF STEEL	1000

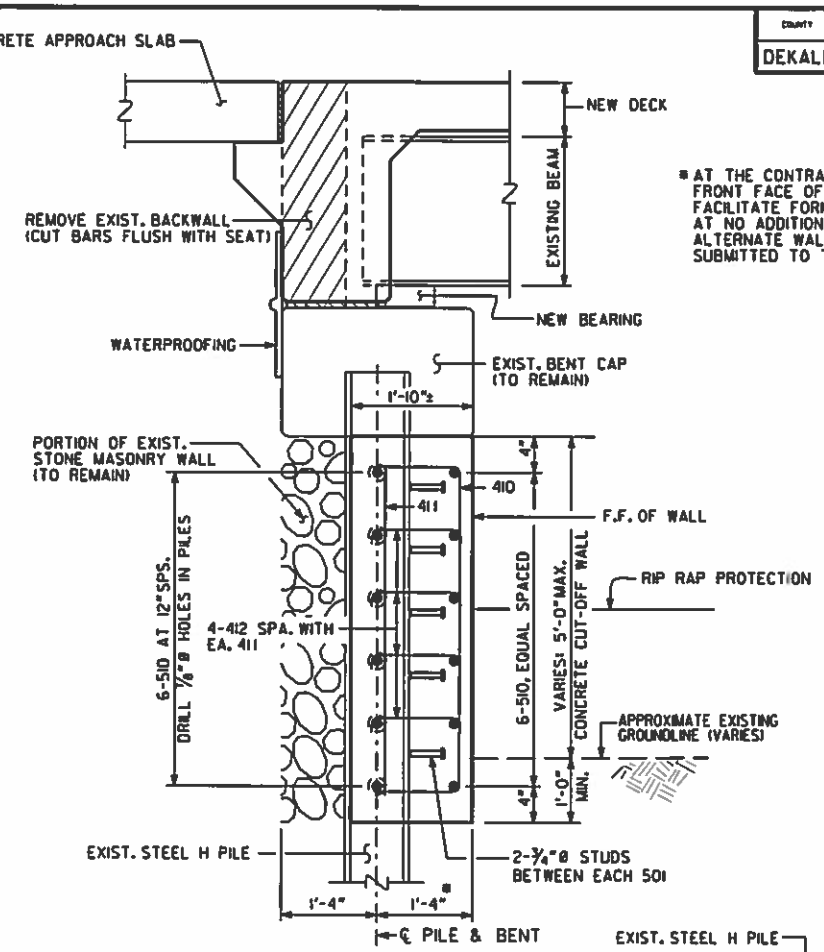

* AT THE CONTRACTOR'S OPTION, DIMENSION TO FRONT FACE OF WALL MAY BE INCREASED TO FACILITATE FORMING AND CASTING OF WALL AT NO ADDITIONAL COST TO THE COUNTY. ALTERNATE WALL CONFIGURATIONS MUST BE SUBMITTED TO THE COUNTY FOR APPROVAL.

SECTION A-A

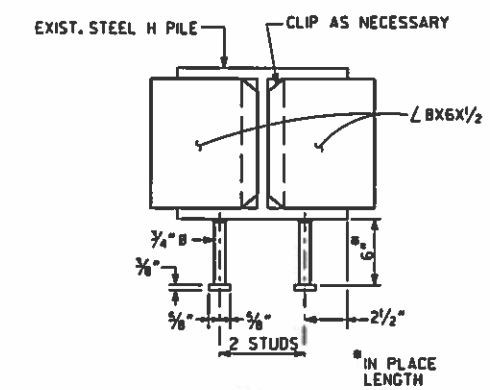

SECTION B-B

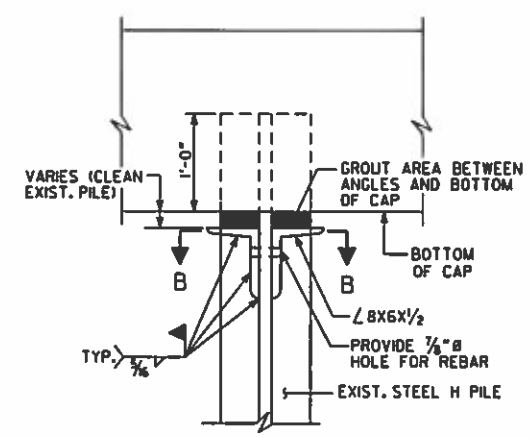

PILE REPAIR DETAIL

REPAIR NOTES:

1. REMOVE EXISTING DECK AND BACKWALL.
2. PROVIDE TEMPORARY SHORING AS REQUIRED.
3. EXCAVATE TO THE BOTTOM OF FRONT FACE OF CUT-OFF WALL.
4. REMOVE MASONRY WALL IN CONFLICT WITH PROPOSED WALL.
5. CLEAN DETERIORATED PILE CAP CONNECTION.
6. DRILL HOLES IN EXISTING PILES.
7. REPAIR PILE CAP CONNECTION.
8. WELD STUDS TO FRONT FACE OF PILE.
9. PLACE REBAR, FORM WALL, AND CAST WALL CONCRETE.
10. RECONSTRUCT END ROLL AND RIP RAP PROTECTION.
11. CAST ENDWALL AND END POST.
12. BACKFILL AND COMPACT SOIL AT BACK FACE OF CUT-OFF WALL, END BENT, AND ENDWALL.
13. CONSTRUCT APPROACH SLAB.

REINFORCING SCHEDULE

LOCATION	NO. OF LOC.	MARK	LENGTH FT.	LENGTH IN.	NO. BARS REQ'D.	TYPE	A	G	B FT.	B IN.	C FT.	C IN.	D FT.	D IN.	E FT.	E IN.	F FT.	F IN.	N	θ
BENT 1	1																			
		410A	7	4	12	2			4	4	1	6	1	6						
		410B	VARY		30	2			VARY		1	6	1	6						
		411A	4	4	24	1														
		411B	VARY		14	1														
		412	2	2	120	2			1	6	0	4	0	4						
		510A	40	8	6	1														
		510B	VARY		6	1														

REVISIONS	BY	DATE

DRAWING NO. 35-012
BRIDGE SHEET 7 OF 8

BRIDGE NO. 2

AECOM

DEKALB COUNTY, GEORGIA
DEPARTMENT OF PUBLIC WORKS

END BENT 1
KEY ROAD OVER INTRENCHMENT CREEK

DEKALB COUNTY

SCALE: NO SCALE — SEPTEMBER 2015

DESIGNED WBN — CHECKED CLE — REVIEWED AP
DRAWN WBN — DESIGN GROUP — APPROVED DEKALB

1 INCH WHEN PRINTED FULL SIZE

0012613.b229abl.dgn
8:54:17 AM
9/1/2015

COUNTY	PROJECT NUMBER	SHEET NO.	TOTAL SHEETS
DEKALB	0012613	30	73

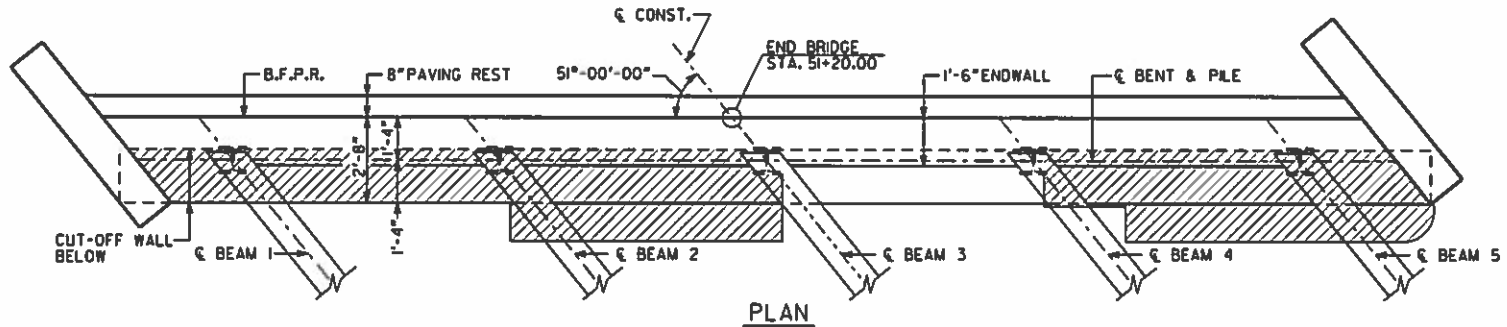

PLAN
BENT 4

DENOTES EXISTING MASONRY REPAIR WALLS TO BE REMOVED

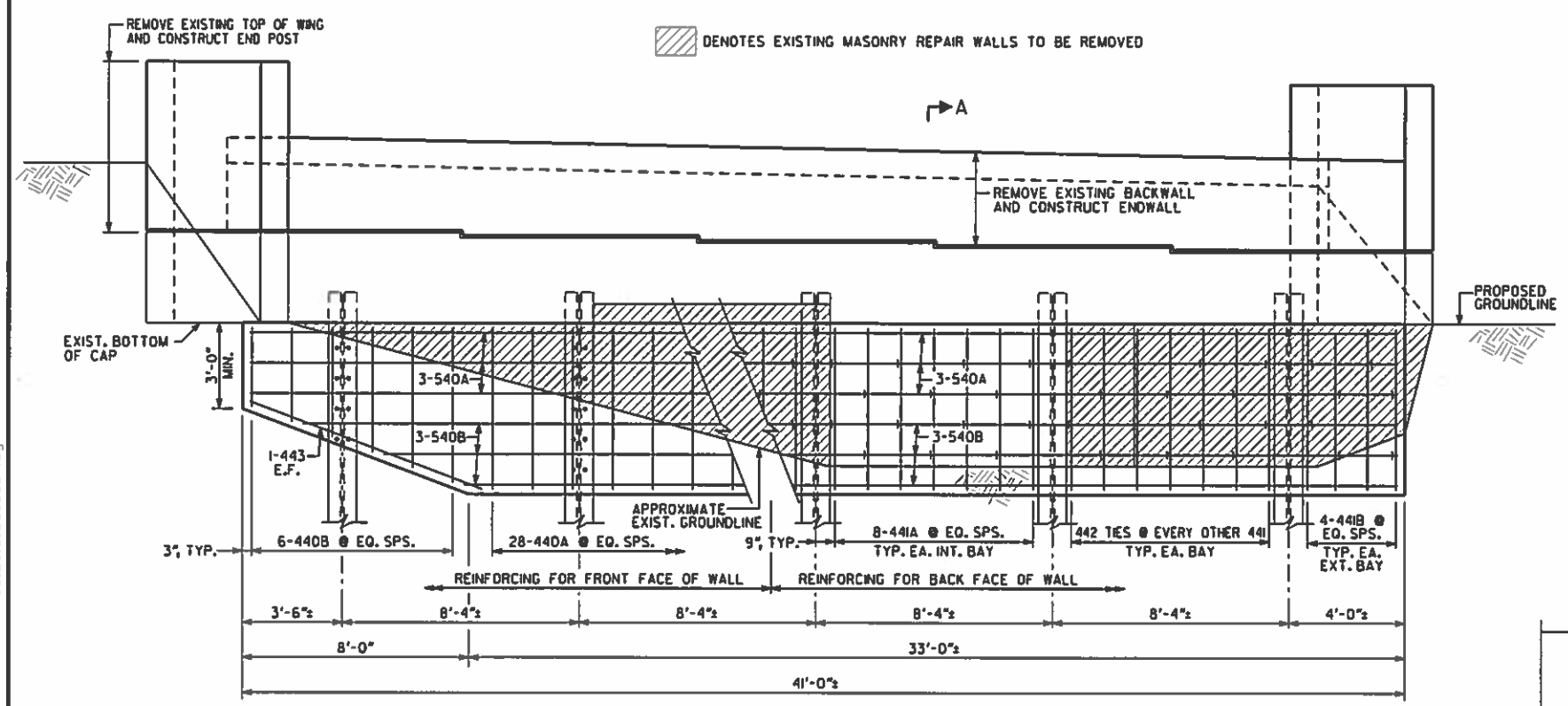

ELEVATION
LOOKING AHEAD

NOTE:
MAINTAIN 2" CL. ON ALL REINFORCEMENT UNLESS OTHERWISE NOTED.

SUBSTRUCTURE QUANTITIES	
ITEM	BENT 4
CY CLASS A CONCRETE	16.0
LB BAR REINF STEEL	1000

REINFORCING SCHEDULE

LOCATION	NO. OF LOC.	MARK	LENGTH FT.	LENGTH IN.	NO. BARS REQ'D.	TYPE	A	G	B FT.	B IN.	C FT.	C IN.	D FT.	D IN.	E FT.	E IN.	F FT.	F IN.	N	θ
BENT 4	1																			
		440A	8	8	28	2			5	8	1	6	1	6						
		440B	VARY		6	2			VARY		1	6	1	6						
		441A	5	8	28	1														
		441B	VARY		6	1														
		442	0	9	68	10	4	4												
		443	8	9	2	1														
		540A	40	8	6	1														
		540B	VARY		6	1														

REPAIR NOTES:

1. REMOVE EXISTING DECK AND BACKWALL.
2. PROVIDE TEMPORARY SHORING AS REQUIRED.
3. EXCAVATE TO THE BOTTOM OF FRONT FACE OF CUT-OFF WALL.
4. REMOVE REPAIR WALLS, AND ANY MASONRY WALL IN CONFLICT WITH PROPOSED WALL.
5. CLEAN DETERIORATED PILE CAP CONNECTION. (AS NECESSARY)
6. DRILL HOLES IN EXISTING PILES.
7. REPAIR PILE CAP CONNECTION. (AS NECESSARY)
8. WELD STUDS TO FRONT FACE OF PILE.
9. PLACE REBAR, FORM WALL, AND CAST WALL CONCRETE.
10. RECONSTRUCT END ROLL AND RIP RAP PROTECTION.
11. CAST ENDWALL, DECK, AND END POST.
12. BACKFILL AND COMPACT SOIL AT BACK FACE OF CUT-OFF WALL, END BENT, AND ENDWALL.
13. CONSTRUCT APPROACH SLAB.

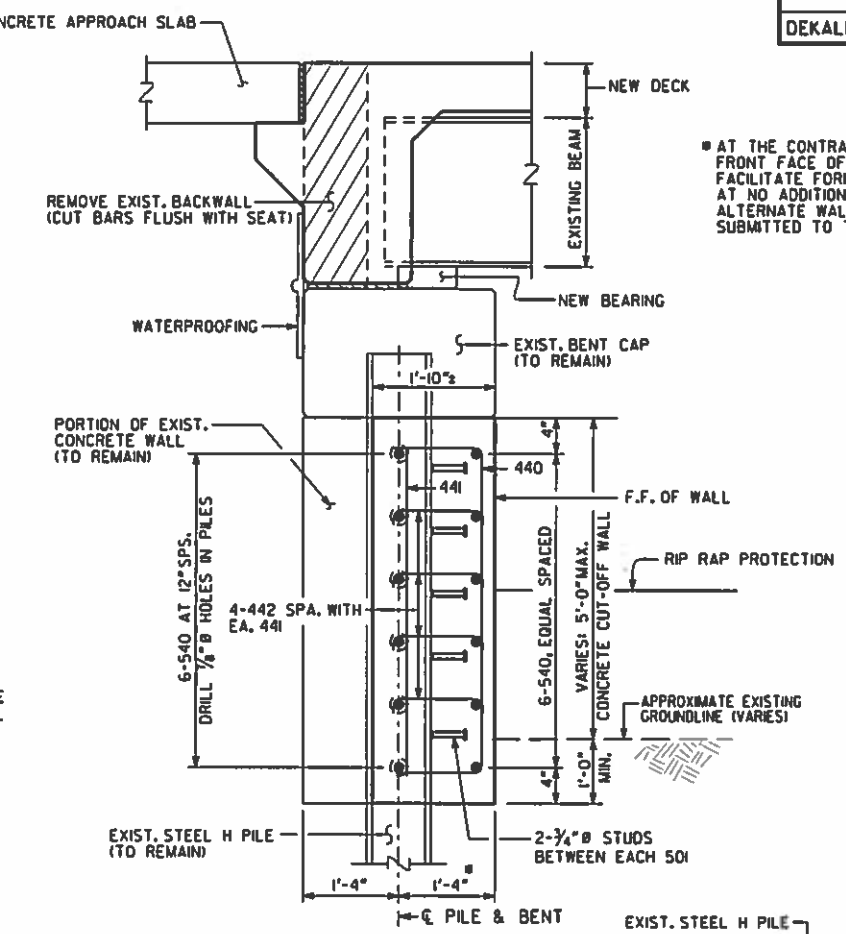

SECTION A-A

■ AT THE CONTRACTOR'S OPTION, DIMENSION TO FRONT FACE OF WALL MAY BE INCREASED TO FACILITATE FORMING AND CASTING OF WALL AT NO ADDITIONAL COST TO THE COUNTY. ALTERNATE WALL CONFIGURATIONS MUST BE SUBMITTED TO THE COUNTY FOR APPROVAL.

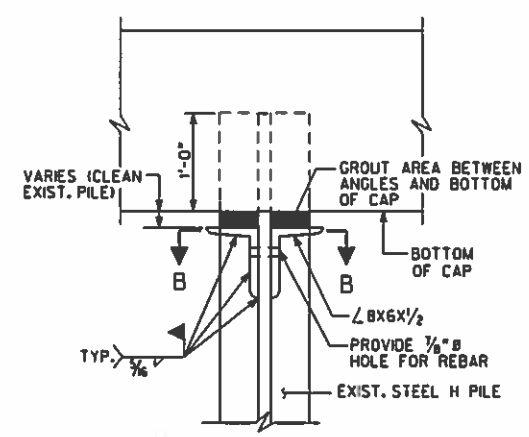

PILE REPAIR DETAIL
(CONTRACTOR TO VERIFY WITH ENGINEER IF REPAIR IS NEEDED AFTER REMOVAL OF MASONRY REPAIR WALLS)

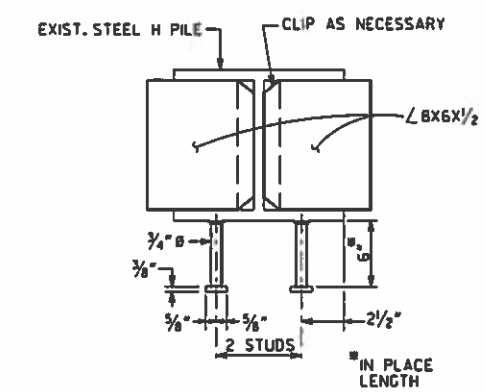

SECTION B-B

BRIDGE NO. 2

AECOM

DEKALB COUNTY, GEORGIA
DEPARTMENT OF PUBLIC WORKS

END BENT 4
KEY ROAD OVER INTRENCHMENT CREEK

DEKALB COUNTY

DATE	REVISIONS	BY

DRAWING NO. 35-013
BRIDGE SHEET 8 OF 8

SCALE: NO SCALE — SEPTEMBER 2015

DESIGNED WBN — CHECKED GLE — REVIEWED AP
DRAWN WBN — DESIGN GROUP — APPROVED DEKALB

1 INCH WHEN PRINTED FULL SIZE

0012613_b230eb4.dgn
8:58:36 AM
9/1/2015

COUNTY	PROJECT NUMBER	SHEET NO.	TOTAL SHEETS
DEKALB	0012613		73

STATE	PROJECT NUMBER	SHEET NO.	TOTAL SHEETS
GA.			

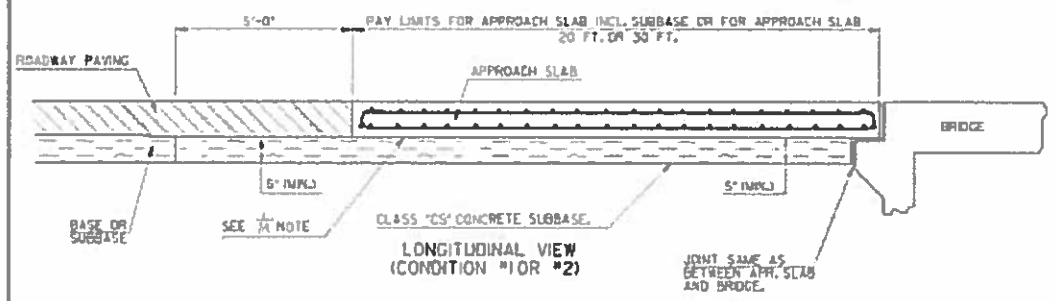

LONGITUDINAL VIEW
(CONDITION #1 OR #2)

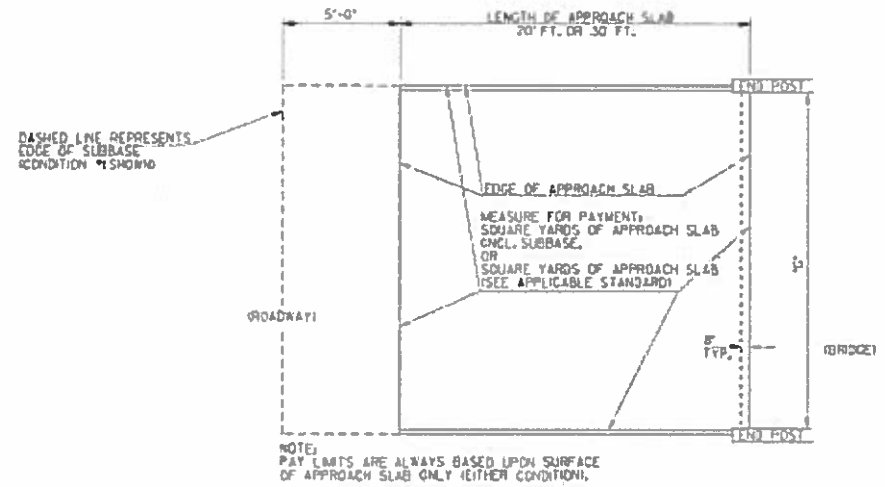

NOTE:
PAY LIMITS ARE ALWAYS BASED UPON SURFACE OF APPROACH SLAB ONLY (EITHER CONDITION).

PLAN VIEW

"C"	⊗ CUBIC YARDS OF SUBBASE FOR APPROACH SLAB			
	STD. 9017K	STD. 9017L	STD. 9017P	STD. 9017Q
28'-0"	15.63	1.08		
29'-6"			16.47	11.67
30'-0"				
31'-6"			17.54	12.43
32'-0"	17.73	12.38		
33'-6"			18.60	13.18
34'-0"				
35'-6"			19.67	13.94
36'-0"	19.87	14.08		
37'-6"			20.74	14.70
38'-0"				
39'-6"			21.81	15.46
40'-0"	21.99	15.59		
41'-6"			22.88	16.21
42'-0"	23.05	16.34		
43'-6"			23.94	16.97
44'-0"				
45'-6"			25.01	17.73
46'-0"		17.84		
47'-6"			26.08	
48'-0"	26.23	18.59		
49'-6"			27.15	
50'-0"				
51'-6"			28.22	
52'-0"	28.35			
53'-6"			29.29	
54'-0"				
55'-6"			30.35	
56'-0"				
57'-6"			31.42	
58'-0"	31.53			
59'-6"			32.49	
60'-0"	32.59			
61'-6"			33.56	
62'-0"	33.65			
63'-6"			34.63	
64'-0"	34.71			
65'-6"			35.70	
66'-0"	35.77			

⊗ QUANTITES GIVEN IN THE TABLE ARE BASED UPON MINIMUM DIMENSIONS AND ARE GIVEN FOR INFORMATION ONLY.

CUBIC YARDS OF SUBBASE FOR USE WITH STD. 9017U, STD. 9017N OR FOR USE WITH SLAB SIZES NOT GIVEN IN TABLE, MAY BE ESTIMATED WITH THE FOLLOWING FORMULAE:

FOR 30' APPROACH SLABS:
CU. YARDS = 0.5298 TIMES SLAB WIDTH (IN FEET)

FOR 20' APPROACH SLABS:
CUBIC YARDS = 0.3755 TIMES SLAB WIDTH (IN FEET)

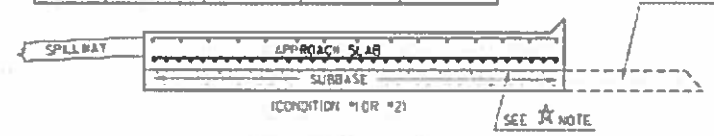

IF MAT'L. UNDER APPROACH SLAB IS FLEXIBLE ENOUGH TO ALLOW DRIVING OF GUARDRAIL POST, THE LIMITS SHALL BE EXTENDED SIMILARLY TO THAT ON THE ROADWAY.

☆ NOTE:
IF "CS" CONCRETE OR P.C. CONC. SUBBASE IS USED, CLEAR POLYETHYLENE SHEETING 6 MIL. MIN. THICKNESS, WITH A 6" OVERLAP, UNIFORMALLY LAYED, SHALL BE REQUIRED UNDER THE APPROACH SLAB TO PREVENT BONDING. POLYETHYLENE SHEETING SHALL BE NEW, UNUSED AND FREE OF HOLES, RIPS AND TEARS.

CROSS SECTIONAL VIEW

NOTE: SUBBASE SHOWN ABOVE FOR APPROACH SLAB WITH SPILLWAY ON ONE SIDE AND SLOPED EDGE ON OTHER SIDE. SUBBASE DETAILS SIMILAR FOR APPROACH SLAB WITH TRANSITION CURB OR OTHER DRAINAGE STRUCTURES.

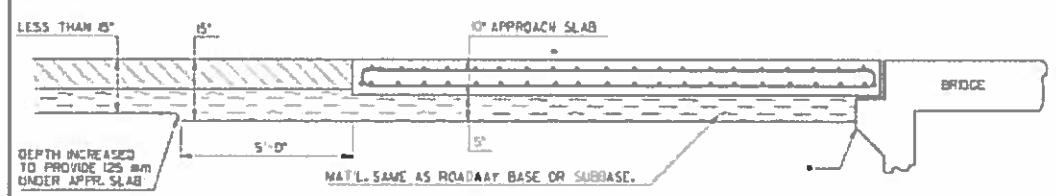

LONGITUDINAL VIEW
(CONDITION #2)

CONDITION #1:
WHERE THE CONTRACT FOR THE BRIDGE AND APPROACH SLABS IS LET SEPARATE FROM THE ROADWAY PAVING CONTRACT, THE SUBBASE FOR THE APPROACH SLAB WILL BE CLASS "CS" CONCRETE ACCORDING TO SECTION 500. IN THIS CASE, PAYMENT FOR THE SUBBASE WILL BE INCLUDED IN THE PAYMENT FOR THE APPROACH SLAB.

CONDITION #2:
WHERE THE ROADWAY PAVING AND THE BRIDGE ARE LET UNDER THE SAME CONTRACT, THE APPROACH SLAB SUBBASE MAY BE EITHER CLASS "CS" CONCRETE OR MAY BE THE SAME MATERIAL AS REQUIRED FOR THE ROADWAY BASE OR SUBBASE SUCH AS GRADED AGGREGATE, P.C. CONC. SUBBASE, ETC. IN THIS CASE, PAYMENT FOR THE SUBBASE WILL BE INCLUDED IN THE PAYMENT FOR THE APPROACH SLAB.

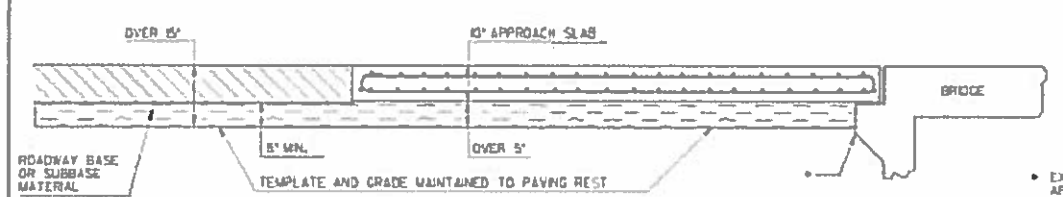

LONGITUDINAL VIEW
(CONDITION #2)

• EXPANSION JOINT REQ'D. SAME AS BETWEEN APPROACH SLAB & BRIDGE, IF SUBBASE IS PORTLAND CEMENT CONCRETE OR CLASS "CS" CONCRETE.

REVISED NOTES PAY ITEM - COND. #2	1-16-05	G.W.B.	
REVISION	DATE	BY	

DEPARTMENT OF TRANSPORTATION
STATE OF GEORGIA

CONSTRUCTION DETAIL

SUBBASES FOR APPROACH SLABS

NO SCALE

REV. & REDRAWN OCT. 1985

NUMBER
M-2

AECOM

REVISION DATES		

DEKALB COUNTY
DEPARTMENT OF TRANSPORTATION

CONSTRUCTION DETAILS

CONSTITUTION ROAD AND KEY ROAD
BRIDGES OVER INTRENCHMENT CREEK

DRAWING NO.
40-001

AECOM

DEKALB COUNTY
DEPARTMENT OF TRANSPORTATION

CONSTRUCTION DETAILS

CONSTITUTION ROAD AND KEY ROAD
BRIDGES OVER INTERCHANGE CREEK

DRAWING NO. 40-002

REVISION DATES

T-1

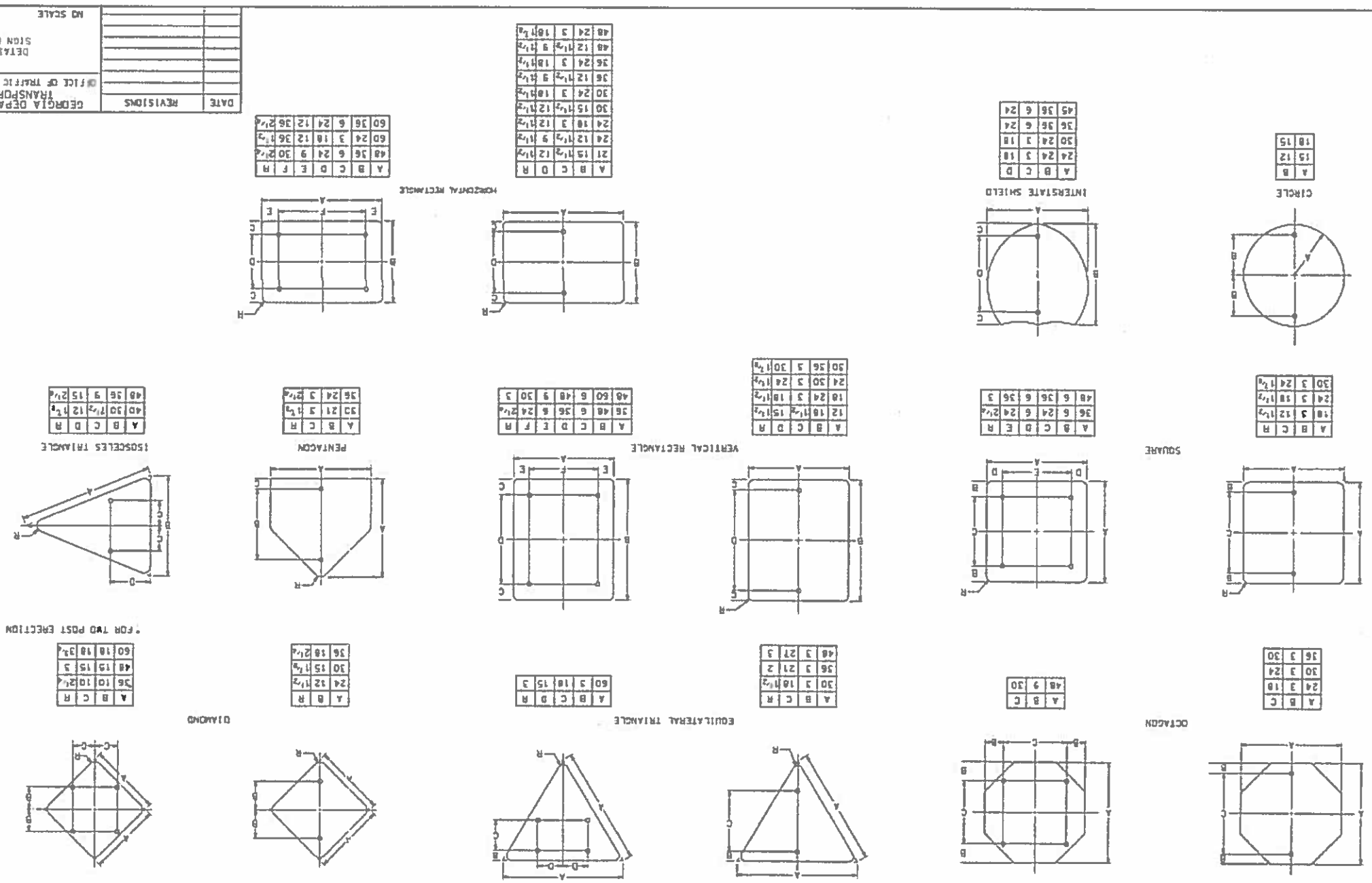

GEORGIA DEPARTMENT OF TRANSPORTATION
OFFICE OF TRAFFIC SAFETY & DESIGN

DETAILS OF SIGN PLATES

NO SCALE JANUARY 2000

DATE	REVISIONS

STATE	PROJECT NUMBER	SHEET NO.	TOTAL SHEETS
GA.			

STATE	PROJECT NUMBER	SHEET NO.	TOTAL SHEETS
GA.			

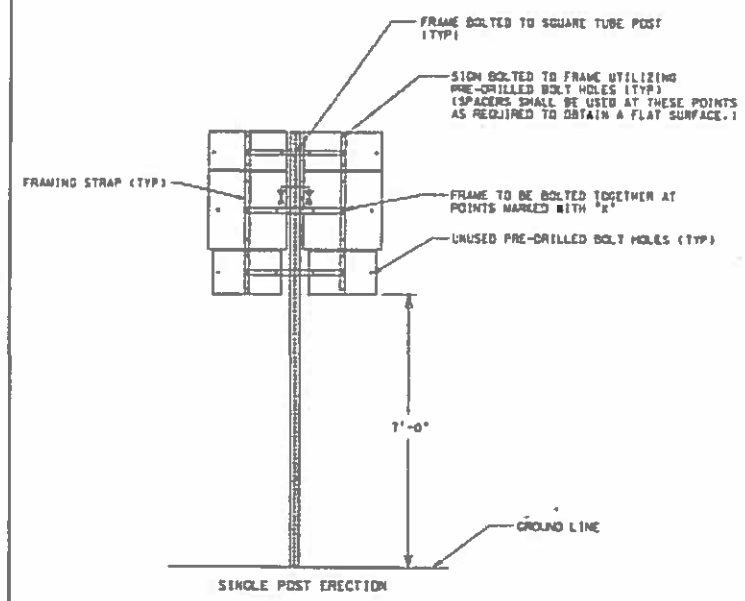

SINGLE POST ERECTION

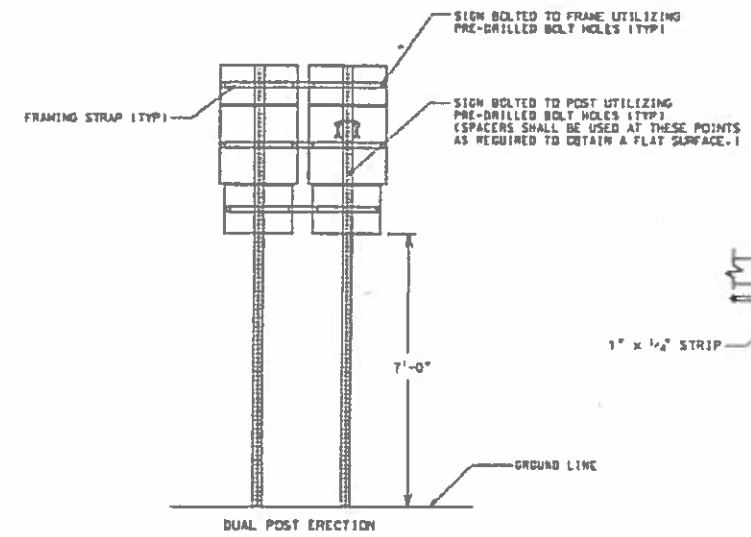

DUAL POST ERECTION

TYPICAL ASSEMBLY UNIT (BACK VIEW)

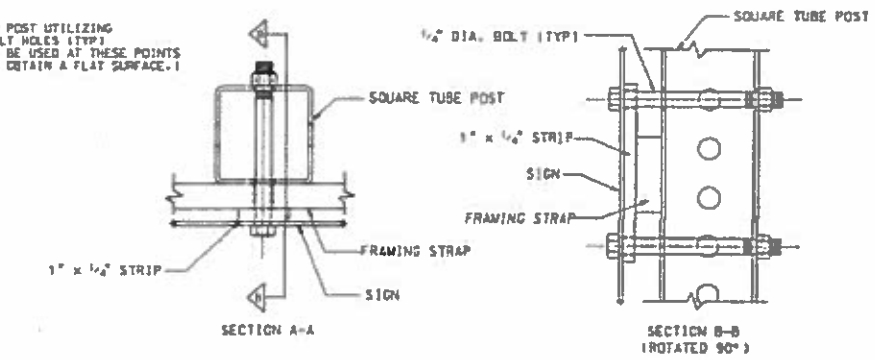

OPTION #1 - FRAMING STRAP WITHOUT MOUNTING HOLE

(ALL FRAMING STRAPS SHALL BE 1 1/2" x 1/2" x REQUIRED LENGTH)

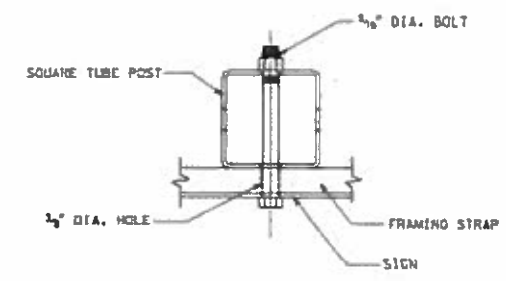

OPTION #2 - FRAMING STRAP WITH MOUNTING HOLE

(ALL FRAMING STRAPS SHALL BE 2" x 1/2" x REQUIRED LENGTH)

GENERAL NOTES:

1. STYLE OF FRAMING IS OPTIONAL. ALTERNATE DESIGNS ARE ACCEPTABLE UPON APPROVAL OF THE ENGINEER. FRAME SHALL BE DESIGNED SO AS TO HOLD THE ASSEMBLY IN A FIXED, RIGID POSITION.
2. FRAMING STRAPS SHALL BE GALVANIZED STEEL OR ALUMINUM.
3. STEEL SHALL BE A.S.T.M. DESIGNATION A-283, GRADE D, GALVANIZED IN ACCORDANCE WITH A.S.T.M. DESIGNATION A-123.
4. ALUMINUM SHALL BE ALLOY 6061-T6.
5. BOLTS, NUTS, WASHERS, AND SPACERS SHALL CONFORM TO THE STANDARD SPECIFICATIONS AND/OR SPECIAL PROVISIONS.
6. FRAMING STRAPS ON A DUAL POST ERECTION SHALL NOT BE BOLTED TO THE POST.

DATE	REVISIONS
1-27-00	[illegible]

GEORGIA DEPARTMENT OF TRANSPORTATION
OFFICE OF TRAFFIC OPERATIONS

DETAILS FOR TYPICAL FRAMING

NO SCALE JANUARY 2000

T-2

AECOM

REVISION DATES		

DEKALB COUNTY
DEPARTMENT OF TRANSPORTATION

CONSTRUCTION DETAILS

CONSTITUTION ROAD AND KEY ROAD BRIDGES OVER INTRENCHMENT CREEK

DRAWING NO. 40-003

STATE	PROJECT NUMBER	SHEET NO.	TOTAL SHEETS
GA.			

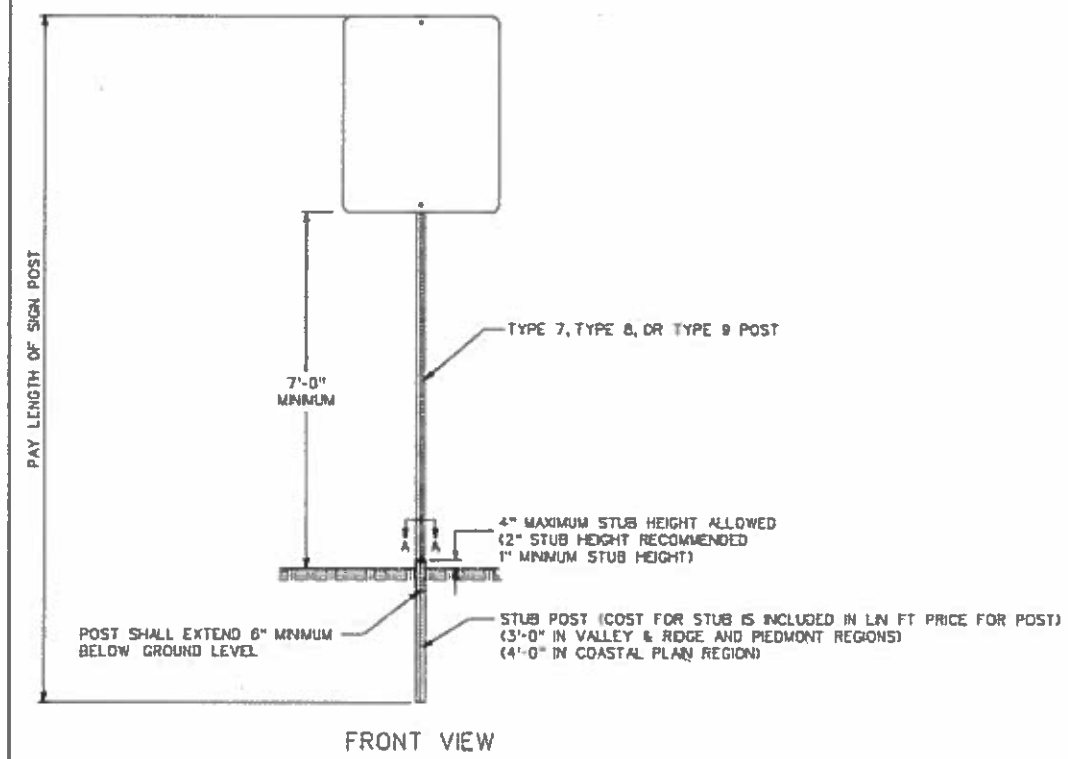

FRONT VIEW

POST	STUB SIZE
TYPE 7	2 1/4" x 2 1/4"
TYPE 8	2 3/4" x 2 3/4"
TYPE 9	2 1/2" x 2 1/2"

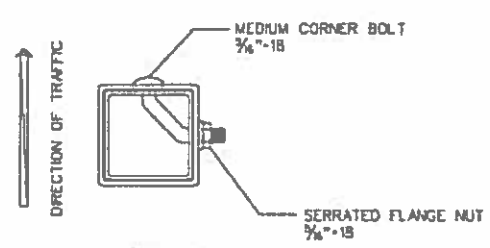

SECTION A-A

SIGN POST SELECTION CHART

70 MPH Wind Load Chart - 15% Gust Factor

	SUP BASE NOT REQUIRED				GROUND MOUNTED BREAKAWAY SIGN SUPPORT REQUIRED				
	TYPE 7 2"-14 ga.		TYPE 9 2-1/4"-14 ga	TYPE 8 2-1/2"-12 ga.	TYPE 8 2-1/2"-12 ga.		TYPE 8 w/TYPE 9 insert* 2-1/2"-12 ga. W/2-1/4"-14 ga.		
Sign Centroid	1 Post	2 Post	1 Post	1 Post	2 Post	3 Post	1 Post	2 Post	3 Post
	SQUARE FOOTAGE				SQUARE FOOTAGE				
6'	13.50	27.00	19.25	30.00	60.00	90.00	49.25	98.50	147.75
7'	11.80	23.20	16.50	25.75	51.50	77.25	42.25	84.50	126.75
8'	10.15	20.30	14.45	22.55	45.10	67.65	37.00	74.00	111.00
9'	9.00	18.00	12.85	20.00	40.00	60.00	32.85	65.70	98.55
10'	8.10	16.20	11.55	18.00	36.00	54.00	29.55	59.10	88.65
11'	7.40	14.80	10.50	16.40	32.80	49.20	26.90	53.80	80.70
12'	6.80	13.60	9.65	15.00	30.00	45.00	24.65	49.30	73.95
13'	6.25	12.50	8.90	13.85	27.70	41.55	22.75	45.50	68.25
14'	5.80	11.60	8.25	12.90	25.80	38.70	21.15	42.30	63.45
15'	5.00	10.00	6.45	10.10	20.20	30.30	16.55	33.10	49.65
16'	4.70	9.40	6.05	9.45	18.90	28.35	15.50	31.00	46.50
17'	4.45	8.80	5.70	8.90	17.80	26.70	14.60	29.20	43.80
18'	4.15	8.30	5.40	8.40	16.80	25.20	13.80	27.60	41.40
19'	3.95	7.90	5.10	7.95	15.90	23.85	13.05	26.10	39.15
20'	3.75	7.50	4.85	7.55	15.10	22.65	12.40	24.80	37.20

SIGN CENTROID IS DISTANCE FROM GROUND LEVEL TO BOTTOM OF SIGN PLUS HALF THE HEIGHT OF SIGN.
EXAMPLE: 24" X 48" SIGN THAT IS 7 FEET FROM GROUND TO BOTTOM OF SIGN. ADD HALF OF 48" (24" OR 2 FT) PLUS 7 FT. = 9' CENTROID.

SIGN PLATE SHALL NOT EXCEED 48" IN WIDTH ON A SINGLE POST.

* TYPE 9 INSERT SHALL BE A CONTINOUS POST INSERTED INTO THE TYPE 8 POST WHERE REQUIRED. THE INSERT POST SHALL EXTEND FROM THE BOTTOM OF THE SUP BASE UPPER ASSEMBLY TO 4" BELOW THE BOTTOM OF THE SIGN. THE INSERT POST SHALL NOT EXTEND ABOVE THE BOTTOM OF THE SIGN. PAYMENT FOR THE INSERT POST SHALL BE PER LINEAR FOOT OF TYPE 9 POST.

GROUND MOUNTED BREAKAWAY SIGN SUPPORT WILL BE MEASURED AND PAID FOR SEPARATELY. THE COST FOR THIS WORK SHALL INCLUDE THE UPPER AND LOWER ASSEMBLY, STUB POST, CLASS "A" CONCRETE, ALL HARDWARE NECESSARY TO COMPLETE THE INSTALLATION, AND BE INCLUDED IN THE BID PRICE SUBMITTED FOR ITEM 638-3010.

DATE	REVISIONS

GEORGIA DEPARTMENT OF TRANSPORTATION
OFFICE OF TRAFFIC SAFETY & DESIGN

TYPE 7, 8, AND 9
SQUARE TUBE POST
INSTALLATION DETAIL

NO SCALE — JULY 2002

T-3A

AECOM

REVISION DATES		

DEKALB COUNTY
DEPARTMENT OF TRANSPORTATION

CONSTRUCTION DETAILS

CONSTITUTION ROAD AND KEY ROAD
BRIDGES OVER INTRENCHMENT CREEK

DRAWING NO. 40-004

STATE	PROJECT NUMBER	SHEET NO.	TOTAL SHEETS
GA.			

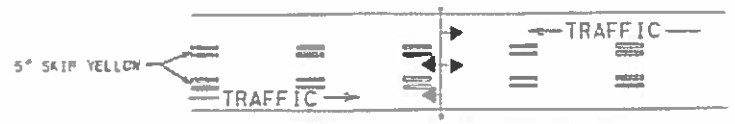

REVERSIBLE LANE SIGN OR SIGNAL SYSTEM REQUIRED

TWO-WAY TRAFFIC WITH A REVERSIBLE CENTER LANE

TWO-WAY TRAFFIC WHERE MOTORISTS IN A SINGLE LANE ARE PERMITTED TO PASS

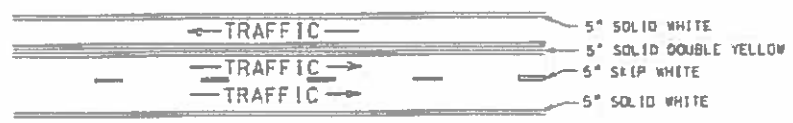

TWO-WAY TRAFFIC WHERE MOTORISTS IN A SINGLE LANE ARE NOT PERMITTED TO PASS

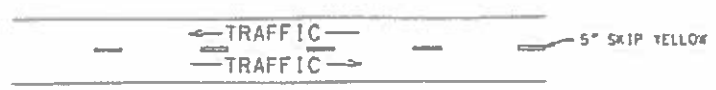

TWO-LANE, TWO-WAY TRAFFIC WITH PASSING PERMITTED

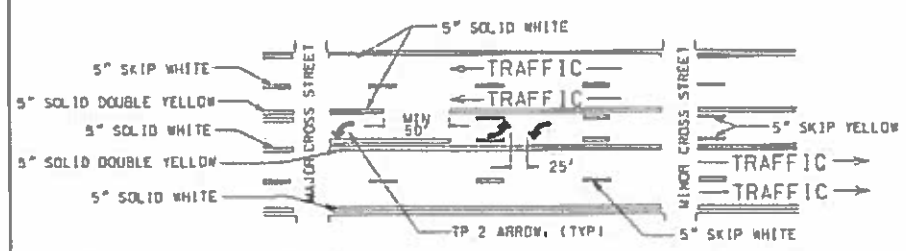

MULTI-LANE, TWO-WAY TRAFFIC WITH SINGLE LANE, TWO-WAY LEFT TURN CHANNELIZATION

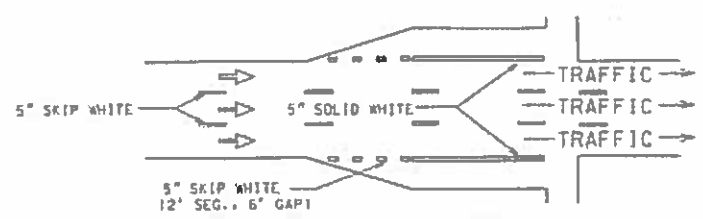

ONE-WAY TRAFFIC WITH ADDED TURN LANES

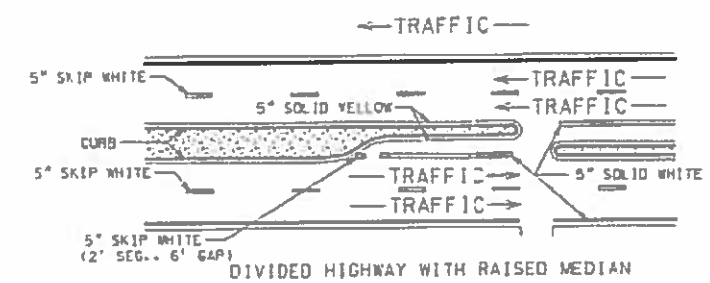

DIVIDED HIGHWAY WITH RAISED MEDIAN

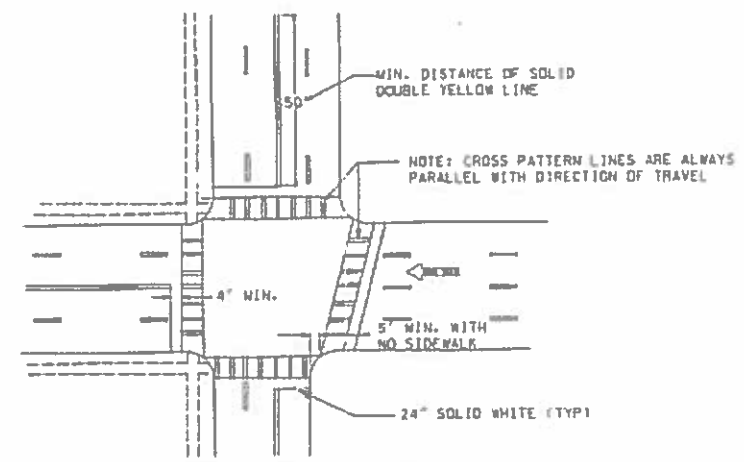

TYPICAL LOCATION OF CROSSWALKS AND STOP BARS

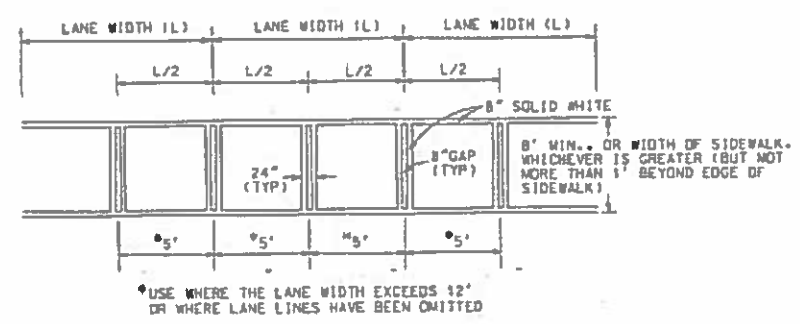

CROSSWALK DETAIL

GENERAL NOTES:

1. SPACING BETWEEEN DOUBLE LINES SHALL BE EQUAL TO THE LINE WIDTH.
2. EDGE LINES SHALL BE PLACED A MINIMUM OF 4 INCHES FROM THE NORMAL EDGE OF PAVEMENT.

DATE	REVISIONS

GEORGIA DEPARTMENT OF TRANSPORTATION
OFFICE OF TRAFFIC SAFETY & DESIGN

DETAILS OF PAVEMENT MARKING PLACEMENT NON-LIMITED ACCESS ROADWAY

NO SCALE JANUARY 2000

T-11A

AECOM

REVISION DATES		

DEKALB COUNTY
DEPARTMENT OF TRANSPORTATION

CONSTRUCTION DETAILS

CONSTITUTION ROAD AND KEY ROAD BRIDGES OVER INTRENCHMENT CREEK

DRAWING NO. 40-005

11/20/2015 8:04:50 AM USER: brogl	gplotbander V8i PO.tbl	P:\Projects_Legacy\ATL-P_Drive\152816042768 Dekalb County\900 CAD-G\5\910 CAD_Bim\912 - WADZ KC\DGN\RDY\07-9007TTB-conv.dgn	COUNTY DEKALB	PROJECT NUMBER 0012613	SHEET NO.	TOTAL SHEETS 73

STATE	PROJECT NUMBER	SHEET NO.	TOTAL SHEETS
GA.			

DIVIDED / UNDIVIDED HIGHWAY

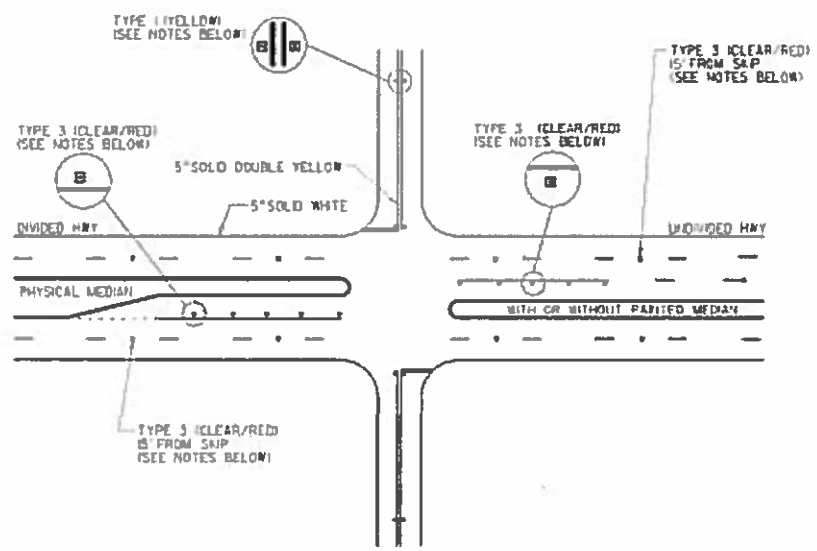

REVERSIBLE LANE

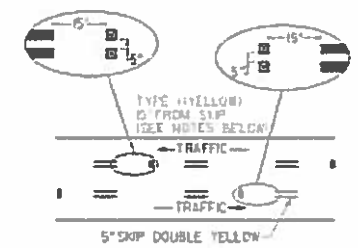

TWO WAY LEFT TURN LANE

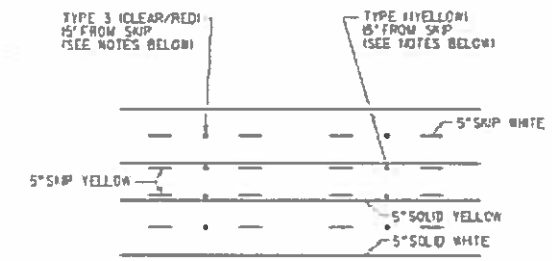

4'-0" STRIPED FLUSH MEDIAN

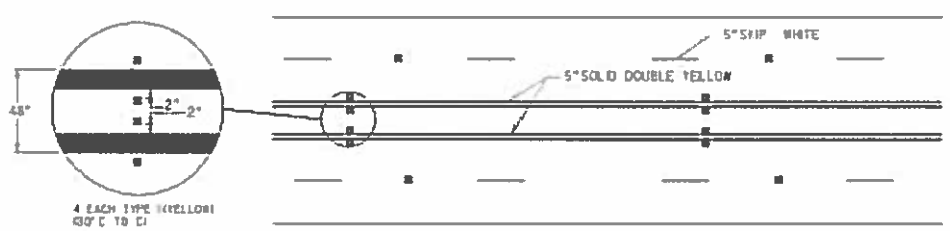

NO PASSING ZONE

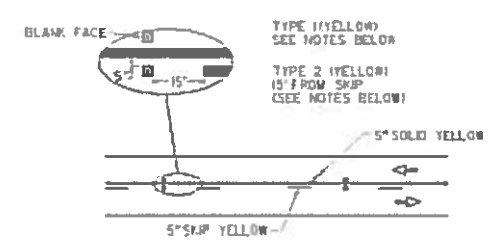

GENERAL NOTES:

1. RAISED PAVEMENT MARKERS SHALL BE SPACED EVERY 80 FT UNLESS OTHERWISE SPECIFIED.
2. ON SOLID WHITE TURN BAY LINES, SPACING SHALL BE 20 FT.
3. RAISED PAVEMENT MARKERS SHALL BE OFFSET 5 INCHES FROM SOLID LANE LINES.
4. CLEAR FACE OF TYPE 3 RAISED PAVEMENT MARKERS SHALL BE ORIENTED TOWARD ONCOMING TRAFFIC.
5. ON HORIZONTAL CURVES WHERE AT LEAST 3 MARKERS CANNOT BE SEEN AT ONE TIME USING NORMAL SPACING, MARKERS SHALL BE PLACED 40 FT.

TYPICAL RPM/STRIPE SPACING

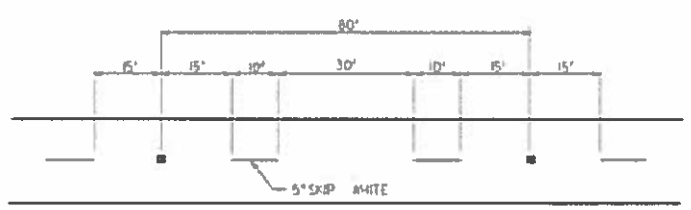

DEPARTMENT OF TRANSPORTATION
STATE OF GEORGIA

CONSTRUCTION DETAILS

RAISED PAVEMENT MARKER LOCATION
NON-LIMITED ACCESS ROADWAY

NO SCALE — REV. AND REDRAWN, JUNE 2015

DESIGNED
DRAWN
TRACED
CHECKED

NUMBER T-15A

AECOM

REVISION DATES

DEKALB COUNTY
DEPARTMENT OF TRANSPORTATION

CONSTRUCTION DETAILS

CONSTITUTION ROAD AND KEY ROAD
BRIDGES OVER INTRENCHMENT CREEK

DRAWING NO. 40-006

COUNTY	PROJECT NUMBER	SHEET NO.	TOTAL SHEETS
DEKALB	0012613		73

STATE	PROJECT NUMBER	SHEET NO.	TOTAL SHEETS
GA.			

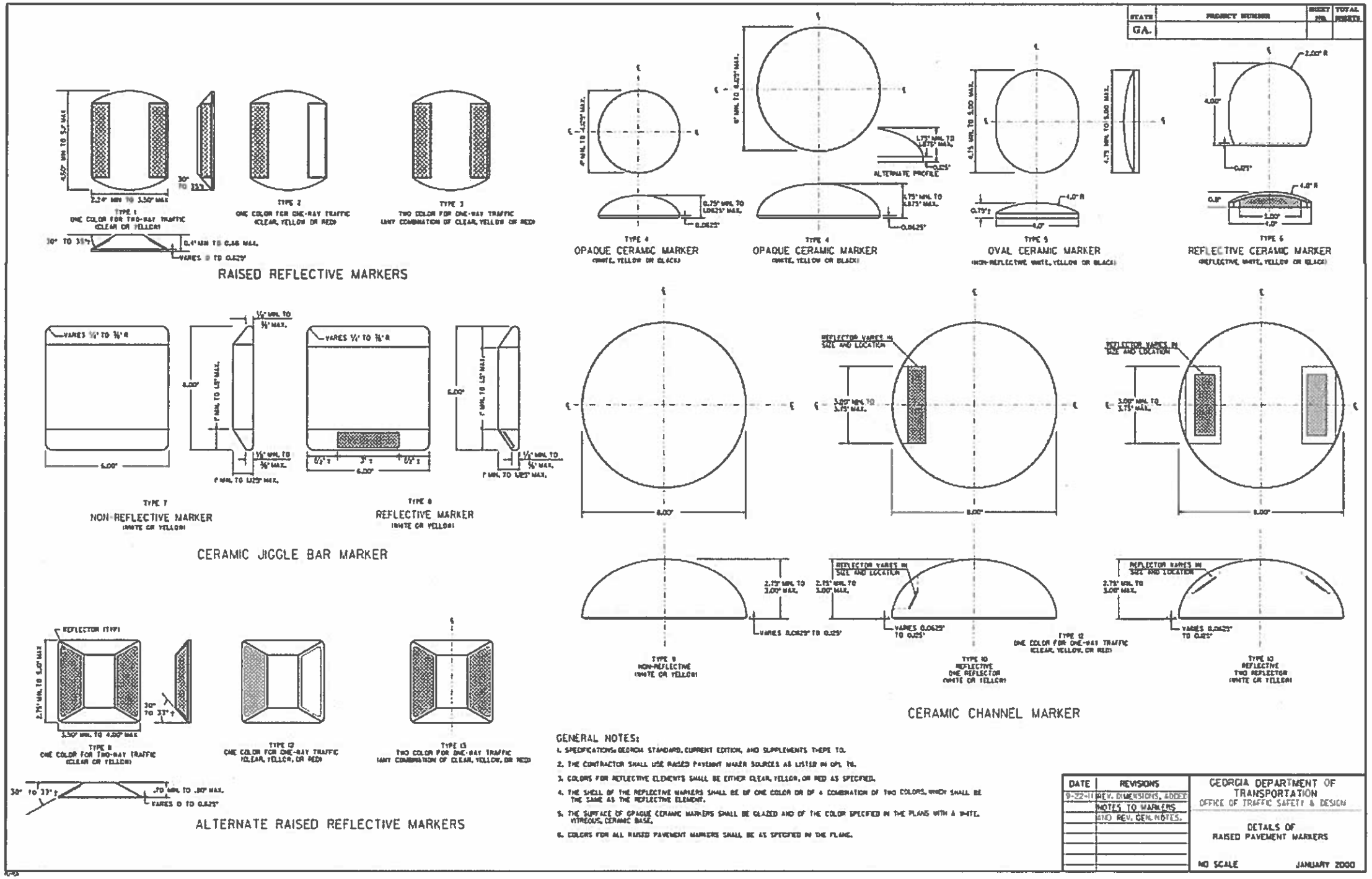

GENERAL NOTES:

1. SPECIFICATIONS: GEORGIA STANDARD, CURRENT EDITION, AND SUPPLEMENTS THERE TO.
2. THE CONTRACTOR SHALL USE RAISED PAVEMENT MARKER SOURCES AS LISTED IN QPL 76.
3. COLORS FOR REFLECTIVE ELEMENTS SHALL BE EITHER CLEAR, YELLOW, OR RED AS SPECIFIED.
4. THE SHELL OF THE REFLECTIVE MARKERS SHALL BE OF ONE COLOR OR OF A COMBINATION OF TWO COLORS, WHICH SHALL BE THE SAME AS THE REFLECTIVE ELEMENT.
5. THE SURFACE OF OPAQUE CERAMIC MARKERS SHALL BE GLAZED AND OF THE COLOR SPECIFIED IN THE PLANS WITH A WHITE, VITREOUS, CERAMIC BASE.
6. COLORS FOR ALL RAISED PAVEMENT MARKERS SHALL BE AS SPECIFIED IN THE PLANS.

DATE	REVISIONS
9-22-11	REV. DIMENSIONS, ADDED NOTES TO MARKERS AND REV. GEN. NOTES.

GEORGIA DEPARTMENT OF TRANSPORTATION
OFFICE OF TRAFFIC SAFETY & DESIGN

DETAILS OF
RAISED PAVEMENT MARKERS

NO SCALE JANUARY 2000

T-15C

AECOM

REVISION DATES		

DEKALB COUNTY
DEPARTMENT OF TRANSPORTATION

CONSTRUCTION DETAILS

CONSTITUTION ROAD AND KEY ROAD
BRIDGES OVER INTRENCHMENT CREEK

DRAWING No. 40-007

11/20/2015 8:16:41 AM USER:brag1	gplotborder-V8I-PO.tbl	P:\Projects_Legacy\AFL-P_Drive\152816042716B Dekalb County\900-CAD-GIS\910 CAD_BIM\912 - WADZ XC\DGN\07\07-9007177B-copy.dgn	COUNTY DEKALB	PROJECT NUMBER 0012613	SHEET NO.	TOTAL SHEETS 13

STATE	PROJECT NUMBER	SHEET NO.	TOTAL SHEETS
GA.			

NOTE: PLACE YEAR BRIDGE IS BUILT ON EACH RIGHT-HAND END POST AS SEEN BY APPROACHING TRAFFIC. FORM NUMERALS WITH APPROVED METAL DIES. NUMERAL GROUP, ETC., TO BE ON GRADE.

NOTE: USE EXTREME CARE IN PLACING FORMED HOLES TO CONFORM TO PATTERN EXACTLY.

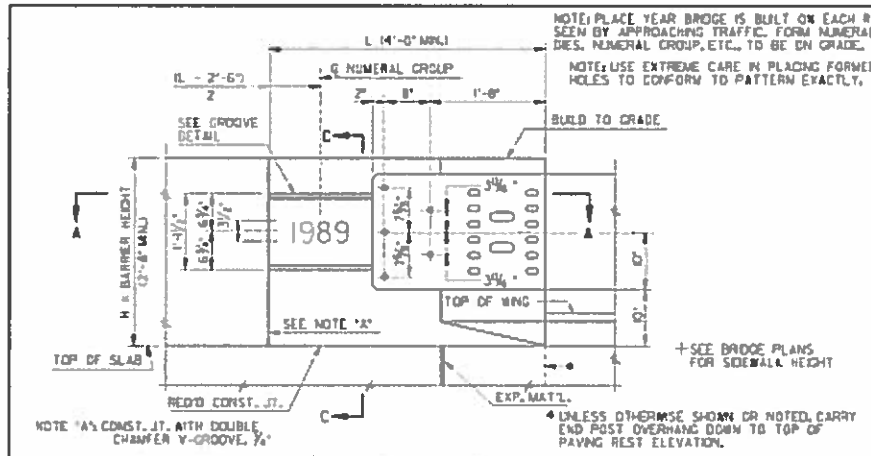

FRONT ELEVATION - END POST
BARRIER
SCALE: 1"=1'-0"

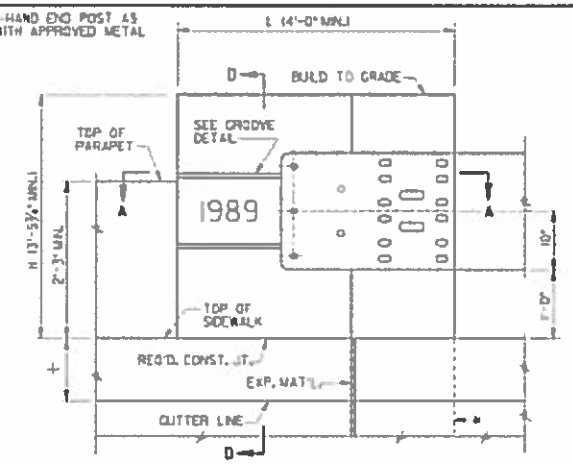

FRONT ELEVATION - END POST
SIDEWALK AND PARAPET
SCALE: 1" = 1'-0"

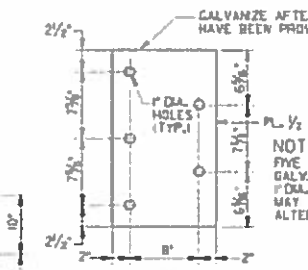

NOTE:
FIVE 3" x ½" x 3" GALV. PLATES WITH 1" DIA. HOLES CENTERED MAY BE USED AS AN ALTERNATE

DETAIL "A"
NO SCALE

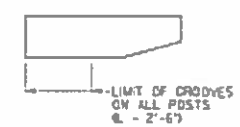

DETAIL "B"
NO SCALE

MATERIALS	
ITEM	SPECIFICATIONS
GUARDRAIL	A.A.S.T.H.O. SPECIFICATION M 180
½" PLATE	A.S.T.M. DESIGNATIONS A-36
NUTS & BOLTS	A.S.T.M. DESIGNATION A-307
WASHERS	MEDIUM STEEL
GALVANIZING	A.S.T.M. A-123

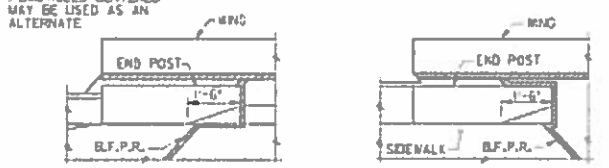

BARRIER

SIDEWALK AND PARAPET

TYPICAL SKEWED END DETAIL
SCALE: ½" = 1'-0"

SEE DETAIL "B" FOR LIMITS OF GROOVE

GROOVE DETAIL
HALF SCALE

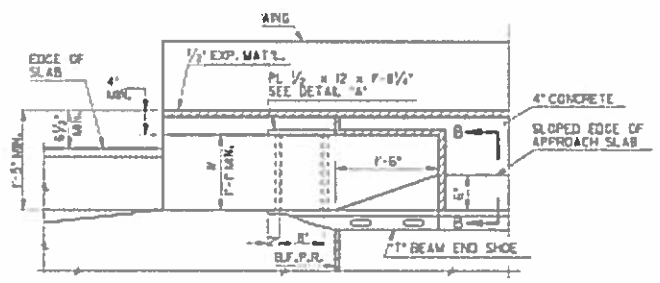

PLAN - END POST
BARRIER
SCALE: 1"=1'-0"

(4) BOLT LENGTH SHALL BE OF SUFFICIENT LENGTH TO PROVIDE FOR FULL NUT ATTACHMENT. "N" + 3" DIMENSION SHALL BE FIELD VERIFIED PRIOR TO ORDERING BOLTS TO ENSURE PROPER LENGTH.

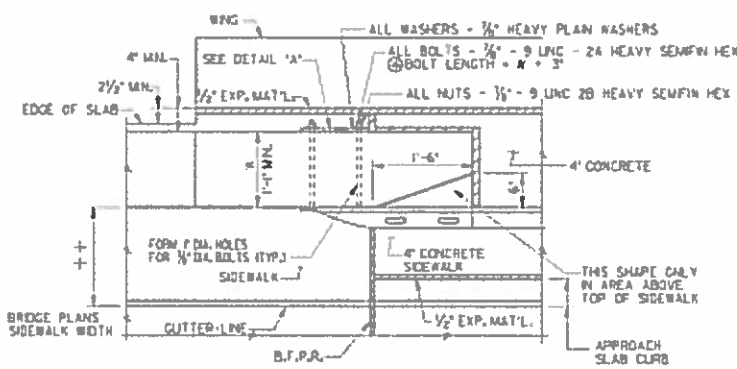

PLAN - END POST
SIDEWALK AND PARAPET
SCALE: 1" = 1'-0"

GENERAL NOTES

SPECIFICATIONS - GEORGIA STANDARDS.

LOCATION - ALL END POSTS UNLESS NOTED ON BRIDGE PLANS.

CHAMFER - CHAMFER ALL EXPOSED EDGES ¾".

GALVANIZING - ALL METAL PARTS SHALL BE GALVANIZED AFTER FABRICATION.

PAYMENT FOR MISCELLANEOUS HARDWARE - COST OF ½" PLATE AND MISCELLANEOUS HARDWARE SHALL BE INCLUDED IN THE PRICES BID FOR CONTRACT ITEMS.

PAYMENT FOR THE END POST - IF END POST IS A PORTION OF THE SUBSTRUCTURE, CONCRETE AND REINFORCEMENT ARE COMPUTED AND INCLUDED IN THE END BENT QUANTITIES.
IF END POST IS A PORTION OF THE SUPERSTRUCTURE, CONCRETE AND REINFORCEMENT ARE COMPUTED AND INCLUDED IN THE END SPAN QUANTITIES.

RESPONSIBILITY - WHEN THE BRIDGE CONTRACT IS SEPARATE FROM THE CONTRACT CONTAINING THE APPROACHING GUARDRAIL, THE BRIDGE CONTRACTOR SHALL ONLY BE RESPONSIBLE FOR THE CONSTRUCTION OF THE END POSTS AND FORMING OF THE 1" DIAMETER BOLT HOLES. THE CONTRACT CONTAINING THE APPROACHING GUARDRAIL SHALL BE RESPONSIBLE FOR FURNISHING AND INSTALLING THE SPECIAL END SHOE, PLATE, NUTS, WASHERS, AND BOLTS.

DIMENSIONS - FOR DIMENSIONS "L", "H", AND "R" AND OTHER DIMENSIONS, SEE BRIDGE PLANS.

END POST - END POST TO BE CONSTRUCTED AFTER GUARDRAIL IS IN PLACE.
END POST TO BE CONSTRUCTED AFTER BARRIER IS CONSTRUCTED WHEN NO GUARDRAIL IS USED.

T-P401 EQ. SP.
2" CL. ALL SIDES
P501
T-P701 EQ. SP.

SECTION A-A
SCALE: ¼" = 1'-0"

NOTE: IF END POST IS ON SUBSTRUCTURE, SEE BRIDGE PLANS FOR BARS THAT DOWEL FROM BELOW.

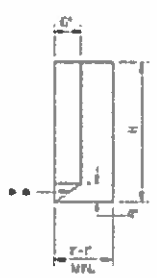

** SLOPED PORTION OF END POST TO BE POURED MONOLITHIC WITH END POST

SECTION B-B
SCALE: ¼" = 1'-0"

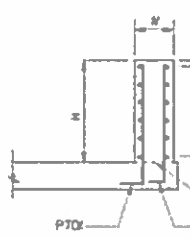

SECTION C-C
SCALE: ½" = 1'-0"

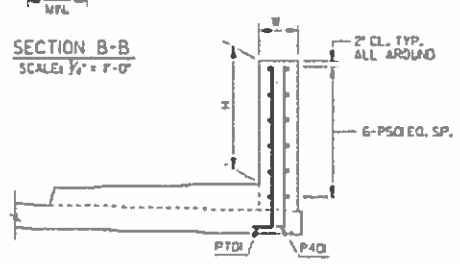

SECTION D-D
SCALE: ½" = 1'-0"

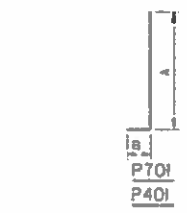

NO. BARS REQ'D		
MARK	BARRIER	SIDEWALK
P401	7	7
P501	6	6
P701	7	7

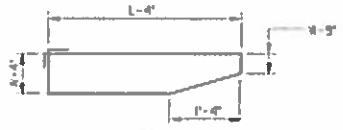

P501

FOR END POST ON SUPERSTRUCTURE:
A = H - 4" + SLAB DEPTH (FOR BARRIER)
A = H - 4" + SIDEWALK DEPTH + SLAB DEPTH (FOR SIDEWALK AND PARAPET)
B = 1'-0"

FOR END POST ON SUBSTRUCTURE:
A = H - 2"
B = 0"

NOTE: ROTATE P701 AND P401 AS NECESSARY TO MAINTAIN 2" MIN. CL. IN CONCRETE.

	9-30-02	6-30-88	DATE
	REV. TRANSITION	REVISION	
	C.L.P.	BY	

DEPARTMENT OF TRANSPORTATION
STATE OF GEORGIA

STANDARD
END POST AND
END POST GUARDRAIL ATTACHMENT DETAILS

SCALE: AS SHOWN MAY 1989

DESIGNED W.E.C.
DRAWN E.B.W.
CHECKED W.E.C.

SUBMITTED STATE ROAD DESIGN ENGINEER
APPROVED CHIEF ENGINEER

NUMBER 3054

AECOM

REVISION DATES		

DEKALB COUNTY
DEPARTMENT OF TRANSPORTATION

GEORGIA STANDARDS

CONSTITUTION ROAD AND KEY ROAD BRIDGES OVER INTRENCHMENT CREEK

DRAWING NO. 41-001

11/20/2015 8:16:56 AM
USER:bray1
gplotbordar-V81-PL1bi
P:\Projects_Legacy\ATL_P_Drive\1528\60427168 Dekalb County\900-CAD-GIS\910 CAD_BIM\912 - WADZ KC\DGN\RDY\GT-9001177B-copy.dgn

COUNTY	PROJECT NUMBER	SHEET NO.	TOTAL SHEETS
DEKALB	0012613		73

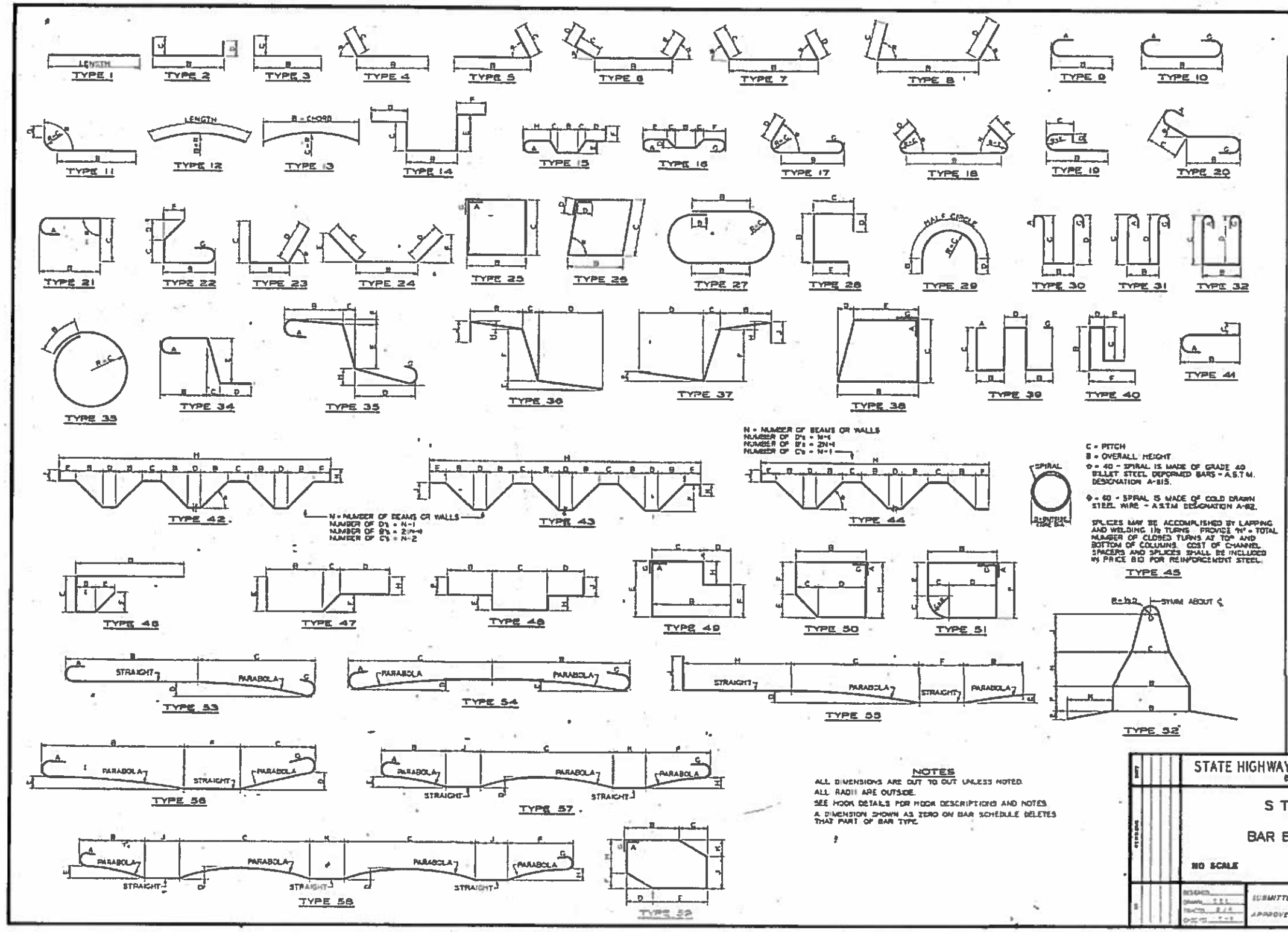

C = PITCH
B = OVERALL HEIGHT
Φ = 40 - SPIRAL IS MADE OF GRADE 40 BILLET STEEL DEFORMED BARS - A.S.T.M. DESIGNATION A-615.

Φ = 60 - SPIRAL IS MADE OF COLD DRAWN STEEL WIRE - A.S.T.M. DESIGNATION A-82.

SPLICES MAY BE ACCOMPLISHED BY LAPPING AND WELDING 1½ TURNS. PROVIDE "N" + TOTAL NUMBER OF CLOSED TURNS AT TOP AND BOTTOM OF COLUMNS. COST OF CHANNEL SPACERS AND SPLICES SHALL BE INCLUDED IN PRICE BID FOR REINFORCEMENT STEEL.

REC'D HOOK DIA. NO.	SHEET	TYPE AND PREV. NO.	STATE AID PROJ. NO.	RIGHT VALUE	SPEC'L NO.	TOTAL SHEETS
3	C.A.					

HOOK DETAILS

RECOMMENDED 180° HOOKS

GRADE 40 bar
D = 3½ for #3 through #11
D = 5½ for #14 and #18

GRADES 50-60-75 bar
D = 4½ for #3 through #8
D = 5½ for #9, #10 and #11
D = 6½ for #14 and #18

RECOMMENDED 180° END HOOK DIMENSIONS

BAR SIZE	GRADES 50-60-75 bar		GRADE 40 bar	
	A or E	J	A or E	J
#3	6	3	6	2½
#4	6	4	6	3½
#5	7	5	7	4½
#6	8	6	8	5½
#7	10	7	9	6½
#8	11	8	10	7
#9	1'-3	1'-1½	1'-0	8
#10	1'-6	1'-4½	1'-2	9
#11	1'-9	1'-7½	1'-4	10
#14	2'-0	1'-10½	2'-0	1'-6½
#18	2'-6	2'-3	2'-11	2'-0
STYLE	1		2	

RECOMMENDED 90° END HOOK DIMENSIONS

ALL GRADES
D = 6½ for #3 through #8
D = 8½ for #9, #10 and #11
D = 10½ for #14 and #18

BAR SIZE	HOOK A or E
#3	6
#4	8
#5	10
#6	1'-0
#7	1'-2
#8	1'-4
#9	1'-6
#10	1'-8
#11	2'-0
#14	2'-6
#18	3'-0
HOOK STYLE 3	

STIRRUP AND TIE HOOK

STIRRUPS (TIES SIMILAR)

STIRRUP AND TIE HOOK DIMENSIONS (GRADES 40-50-60 bar)

BAR SIZE	D (in.)	90° HOOK HOOK A or E	135° HOOK HOOK A or E	135° HOOK A Approx.
#3	1½	6	4	1½
#4	2	4½	4½	2
#5	2½	6	5½	2½
#6	3	4½	4½	4½
STYLE		4	5	

STYLE 6 = NO HOOK

HOOK STYLES DETAILED ON THIS SHEET ARE FOR ILLUSTRATION ONLY. ACTUAL HOOK STYLE FOR ANY PARTICULAR BAR WILL BE SHOWN UNDER A or E HEADING ON BAR SCHEDULE.

NOTES

ALL DIMENSIONS ARE OUT TO OUT UNLESS NOTED.
ALL RADII ARE OUTSIDE.
SEE HOOK DETAILS FOR HOOK DESCRIPTIONS AND NOTES.
A DIMENSION SHOWN AS ZERO ON BAR SCHEDULE DELETES THAT PART OF BAR TYPE.

STATE HIGHWAY DEPARTMENT OF GEORGIA
BRIDGE DIVISION

STANDARD

BAR BENDING DETAILS

NO SCALE — AUGUST 1969

SUBMITTED R. L. Glasman — DESIGN ENGINEER
APPROVED — STATE BRIDGE ENGINEER

NUMBER 3901

AECOM

REVISION DATES		

DEKALB COUNTY
DEPARTMENT OF TRANSPORTATION

GEORGIA STANDARDS

CONSTITUTION ROAD AND KEY ROAD
BRIDGES OVER INTRENCHMENT CREEK

DRAWING NO. 41-002

STATE	PROJECT NUMBER	SHEET NO.	TOTAL SHEETS
GA.			

GUARDRAIL LENGTHS OF ADVANCEMENT AT FIXED OBJECTS OR AT WARRANTING FILL SLOPES TYPICAL

FLARED

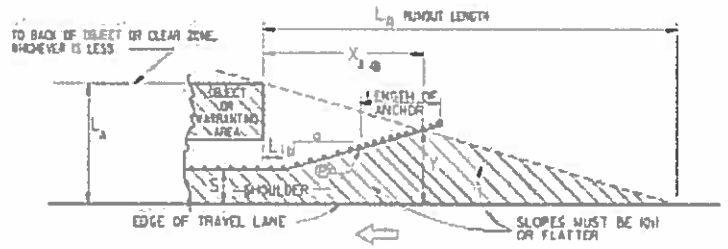

$$X_A = \frac{L_A + (b/a)L - S}{b/a + (L_A/L_R)}$$

$$Y = L_A - \frac{L_A}{L_R}(X_A)$$

DESIGN SPEED (MPH)	FLARE RATE (a:b)
70	15:1
65	14:1
55	12:1
50	10:1
45	10:1
40	9:1
30	7:1

DESIGN SPEED (MPH)	L_R Runout Length in feet			
	OVER 10000 (A.D.T.)	5000-10000 (A.D.T.)	1000-5000 (A.D.T.)	UNDER 1000 (A.D.T.)
80	470	430	380	330
70	400	370	330	290
60	320	290	250	220
50	230	210	180	150
40	160	140	110	100
30	90	80	60	50

S = USUABLE SHOULDER WIDTH PLUS 2 FT (TYP.)

Ⓑ = POINT OF BEGINNING TERMINAL (TYP.)

⊕ X_A, X_T, AND X MEASURED TO THE 3rd POST OF ANCHOR TYPICALLY SEE MANUFACTURE'S SPECIFICATIONS

STANDARD

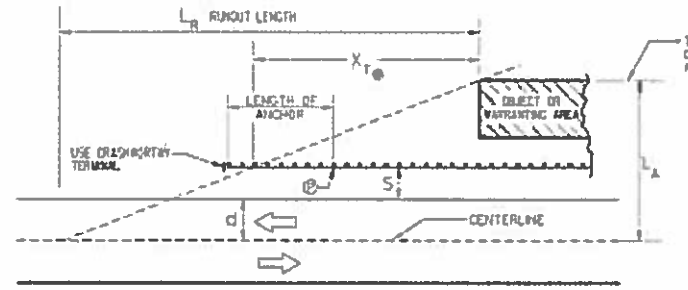

$$X_T = L_R \times \frac{L_A - (S+d)}{L_A}$$

(TRAILING END)

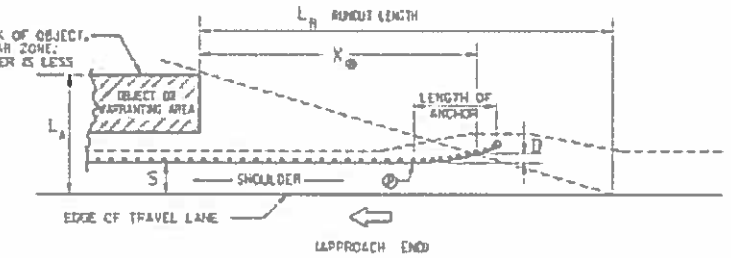

(APPROACH END)

$$X = L_R \times \frac{L_A - (S+D)}{L_A}$$

D = FLARE OF TERMINAL (OFFSET TO 3RD POST)
D = 0 FOR NON-FLARED TERMINALS

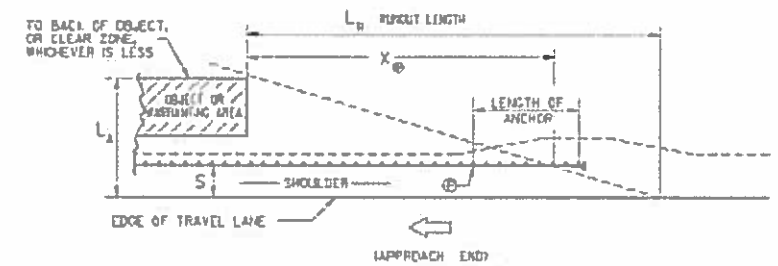

(APPROACH END)

CLEAR ZONE DISTANCES

CLEAR ZONE DISTANCES (FT) CHART

DESIGN SPEED	DESIGN ADT	FORESLOPES 1V:4H OR FLATTER	FORESLOPES 1V:5H TO 1V:4H	FORESLOPES 1V:3H	BACKSLOPES 1V:3H	BACKSLOPES 1V:5H TO 1V:4H	BACKSLOPES 1V:4H OR FLATTER
40 M.P.H. OR LESS	UNDER 750	7-10	7-10	◆▲	7-10	7-10	7-10
	750-1500	10-12	12-14	●■	12-14	12-14	12-14
	1500-6000	12-14	14-16	▶●	14-16	14-16	14-16
	OVER 6000	14-16	16-18	●▶	16-18	16-18	16-18
45-50 M.P.H.	UNDER 750	10-12	12-14	◆■	8-10	8-10	10-12
	750-1500	12-16	16-20	▶■	10-12	12-14	14-16
	1500-6000	16-18	20-26	●▲	12-14	14-16	16-18
	OVER 6000	20-22	24-28	●▼	14-16	18-20	20-22
55 M.P.H.	UNDER 750	12-14	14-18	●▲	8-10	10-12	12-14
	750-1500	16-18	20-24	●▲	10-12	14-16	16-18
	1500-6000	20-22	24-30	●▲	14-16	16-18	20-22
	OVER 6000	22-24	26-32▼	●■	16-18	20-22	22-24
60 M.P.H.	UNDER 750	16-18	20-24	●▲	10-12	12-14	14-16
	750-1500	20-24	26-32▼	●▲	12-14	16-18	20-22
	1500-6000	26-30	32-40▲	●▲	14-18	18-22	24-26
	OVER 6000	30-32▼	36-48▼	●▼	20-22	24-26	26-30
65-70 M.P.H.	UNDER 750	18-20	20-26	●▲	10-12	14-16	14-16
	750-1500	24-26	28-36▼	●▲	12-16	18-20	20-22
	1500-6000	28-32▼	34-42▼	●▲	16-20	22-24	24-28
	OVER 6000	30-34▼	38-46▲	●▲	22-24	26-30	28-30

▶ WHEN A SITE-SPECIFIC INVESTIGATION INDICATES A HIGH PROBABILITY OF CONTINUING CRASHES OR WHEN SUCH OCCURRENCES ARE INDICATED BY CRASH HISTORY, THE DESIGNER MAY PROVIDE CLEAR-ZONE DISTANCES GREATER THAN THE CLEAR ZONE SHOWN ABOVE. CLEAR ZONES MAY BE LIMITED TO 30 FT. FOR PRACTICALITY AND TO PROVIDE A CONSISTENT ROADWAY TEMPLATE IF PREVIOUS EXPERIENCE WITH SIMILAR PROJECTS OR DESIGNS INDICATES SATISFACTORY PERFORMANCE.

▶● BECAUSE RECOVERY IS LESS LIKELY ON THE UNSHIELDED, TRAVERSABLE 1V:3H FILL SLOPES, FIXED OBJECTS SHOULD NOT BE PRESENT IN THE VICINITY OF THE TOE OF THESE SLOPES. RECOVERY OF HIGH-SPEED VEHICLES THAT ENCROACH BEYOND THE EDGE OF THE SHOULDER MAY BE EXPECTED TO OCCUR BEYOND THE TOE OF SLOPE. DETERMINATION OF THE WIDTH OF THE RECOVERY AREA AT THE TOE OF SLOPE SHOULD CONSIDER RIGHT-OF-WAY AVAILABILITY, ENVIRONMENTAL CONCERNS, ECONOMIC FACTORS, SAFETY NEEDS, AND CRASH HISTORIES. ALSO, THE DISTANCE BETWEEN THE EDGE OF THE THROUGH TRAVELED LANE AND THE BEGINNING OF THE 1V:3H SLOPE SHOULD INFLUENCE THE RECOVERY AREA PROVIDED AT THE TOE OF SLOPE. A 10-FT RECOVERY AREA AT THE TOE OF SLOPE SHOULD BE PROVIDED FOR ALL TRAVERSABLE, NON RECOVERABLE FILL SLOPES.

HORIZONTAL CURVE ADJUSTMENTS

RADIUS (FEET)	K_{cz} (CURVE CORRECTION FACTOR) DESIGN SPEED (MPH) 40	45	50	55	60	70
2950	1.1	1.1	1.1	1.2	1.2	1.2
2300	1.1	1.1	1.2	1.2	1.2	1.3
1970	1.1	1.2	1.2	1.2	1.3	1.4
1640	1.1	1.2	1.2	1.3	1.3	1.4
1475	1.2	1.2	1.3	1.3	1.4	1.5
1315	1.2	1.2	1.3	1.3	1.4	
1150	1.2	1.2	1.3	1.4	1.5	
985	1.2	1.3	1.4	1.5	1.5	
820	1.3	1.3	1.4	1.5		
660	1.3	1.4	1.5			
495	1.4	1.5				
330	1.5					

$CZ_c = (L_c)(K_{cz})$

Where:

CZ_c = CLEAR ZONE ON OUTSIDE OF CURVATURE, FEET

L_c = CLEAR ZONES DISTANCE, FEET (SEE CHART AT LEFT)

K_{cz} = CURVE CORRECTION FACTOR

NOTE:
THE CURVE CORRECTION FACTOR IS APPLIED TO THE OUTSIDE OF CURVES ONLY. CORRECTIONS ARE TYPICALLY MADE ONLY TO CURVES LESS THAN 2,950-FT RADIUS.

REVISION	BY	DATE
REVISED TO 2000 ADDED SIDE ALIGNMENTS UNITED DIAGONAL AND CLEAR ZONE	G.L.G.	9-4-07
REVISED		1-14-01

DEPARTMENT OF TRANSPORTATION
STATE OF GEORGIA

STANDARD
GUARDRAIL WARRANT GUIDES
LENGTHS OF ADVANCEMENT
CLEAR ZONE DISTANCES
FILL HEIGHT EMBANKMENTS

NOT TO SCALE — DEC., 1999

DES. — DFN. — TSA. — CHL. —
SUBMITTED — STATE DESIGN POLICY ENGINEER
APPROVED — CHIEF ENGINEER

NUMBER 4000W

AECOM

REVISION DATES		

DEKALB COUNTY
DEPARTMENT OF TRANSPORTATION

GEORGIA STANDARDS

CONSTITUTION ROAD AND KEY ROAD
BRIDGES OVER INTRENCHMENT CREEK

DRAWING NO. 41-003

11/20/2015 USER:brayt	8:17:28 AM	gptolbolder-V8I-PD.tbl	P:\Projects_Legacy\ATL-P_Drive\152816042716B Dekalb County\500 CAD-GIS\510 CAD_BIM\512 - WADE RC\DGN\ADM\07-900717TB-copy.dgn	COUNTY DEKALB	PROJECT NUMBER 0012613	SHEET NO.	TOTAL SHEETS 13

STATE	PROJECT NUMBER	SHEET NO.	TOTAL SHEETS
GA.			

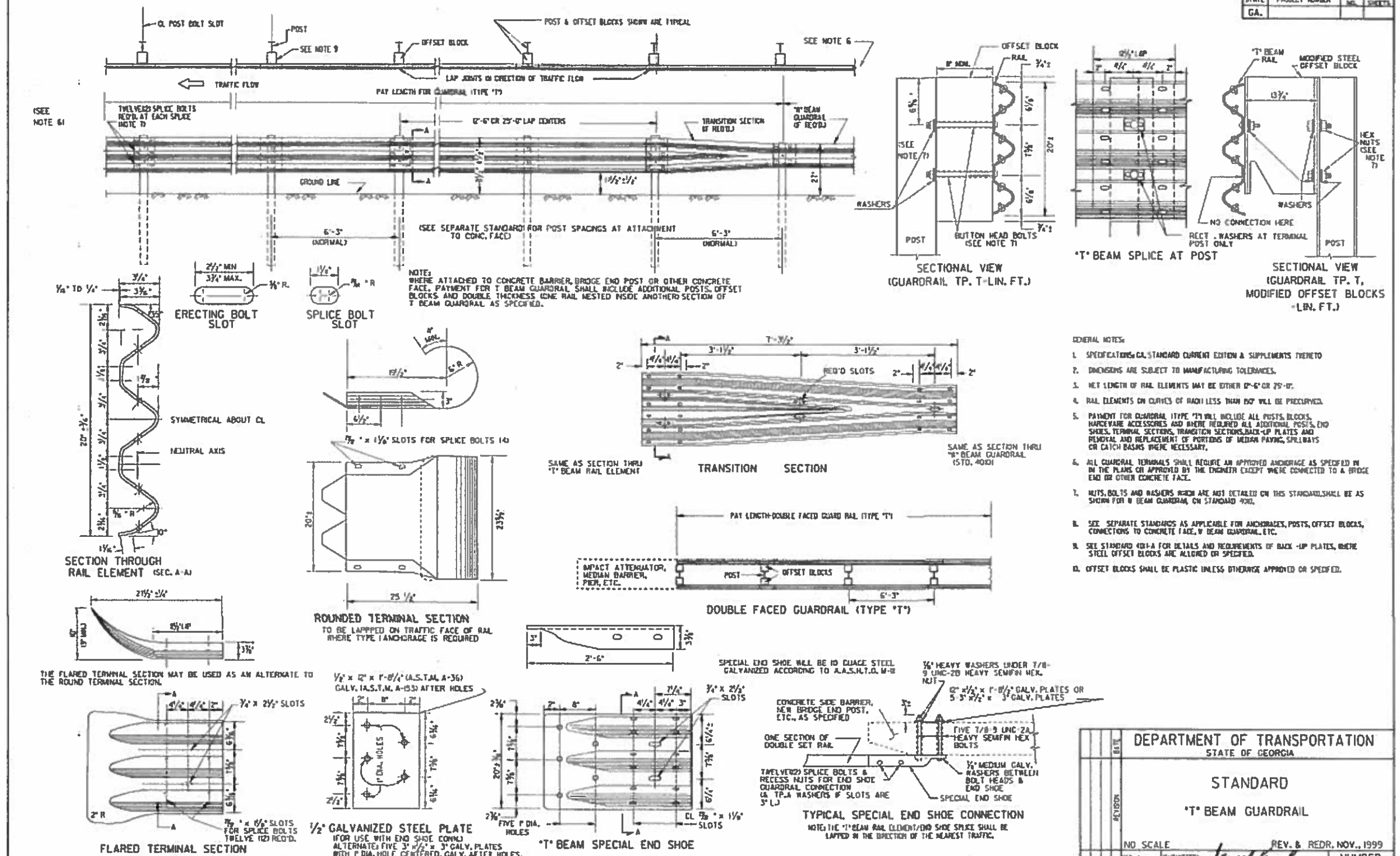

GENERAL NOTES:

1. SPECIFICATIONS: GA. STANDARD CURRENT EDITION & SUPPLEMENTS THERETO
2. DIMENSIONS ARE SUBJECT TO MANUFACTURING TOLERANCES.
3. NET LENGTH OF RAIL ELEMENTS MAY BE EITHER 12'-6" OR 25'-0".
4. RAIL ELEMENTS ON CURVES OF RADII LESS THAN 150' WILL BE PRECURVED.
5. PAYMENT FOR GUARDRAIL (TYPE "T") WILL INCLUDE ALL POSTS, BLOCKS, HARDWARE ACCESSORIES AND WHERE REQUIRED ALL ADDITIONAL POSTS, END SHOES, TERMINAL SECTIONS, TRANSITION SECTIONS, BACK-UP PLATES AND REMOVAL AND REPLACEMENT OF PORTIONS OF MEDIAN PAVING, SPILLWAYS OR CATCH BASINS WHERE NECESSARY.
6. ALL GUARDRAIL TERMINALS SHALL REQUIRE AN APPROVED ANCHORAGE AS SPECIFIED IN IN THE PLANS OR APPROVED BY THE ENGINEER EXCEPT WHERE CONNECTED TO A BRIDGE END OR OTHER CONCRETE FACE.
7. NUTS, BOLTS AND WASHERS WHICH ARE NOT DETAILED ON THIS STANDARD, SHALL BE AS SHOWN FOR W BEAM GUARDRAIL ON STANDARD 4001.
8. SEE SEPARATE STANDARDS AS APPLICABLE FOR ANCHORAGES, POSTS, OFFSET BLOCKS, CONNECTIONS TO CONCRETE FACE, W BEAM GUARDRAIL, ETC.
9. SEE STANDARD 4011-A FOR DETAILS AND REQUIREMENTS OF BACK-UP PLATES, WHERE STEEL OFFSET BLOCKS ARE ALLOWED OR SPECIFIED.
10. OFFSET BLOCKS SHALL BE PLASTIC UNLESS OTHERWISE APPROVED OR SPECIFIED.

REVISION	DATE	BY

DEPARTMENT OF TRANSPORTATION
STATE OF GEORGIA

STANDARD

"T" BEAM GUARDRAIL

NO SCALE — REV. & REDR. NOV., 1999

SUBMITTED: STANDARDS & APPROVED: CHIEF ENGINEER

NUMBER 4270

AECOM

REVISION DATES		

DEKALB COUNTY
DEPARTMENT OF TRANSPORTATION

GEORGIA STANDARDS

CONSTITUTION ROAD AND KEY ROAD BRIDGES OVER INTRENCHMENT CREEK

DRAWING NO. 41-004

11/20/2015 8:17:46 AM USER:aroyl	gplotborder-V81-PO.tbl	P:\Projects_Legacy\ATL-P_Drive\152816042716B Dekalb County\900-CAD-GIS\910 CAD_Bid\912 - WADE RC\DGN\ROY\07-9007(ITT)-copy.dgn	COUNTY: DEKALB	PROJECT NUMBER: 0012613	SHEET NO.	TOTAL SHEETS: 73

STATE	PROJECT NUMBER	SHEET NO.	TOTAL SHEETS
GA.			

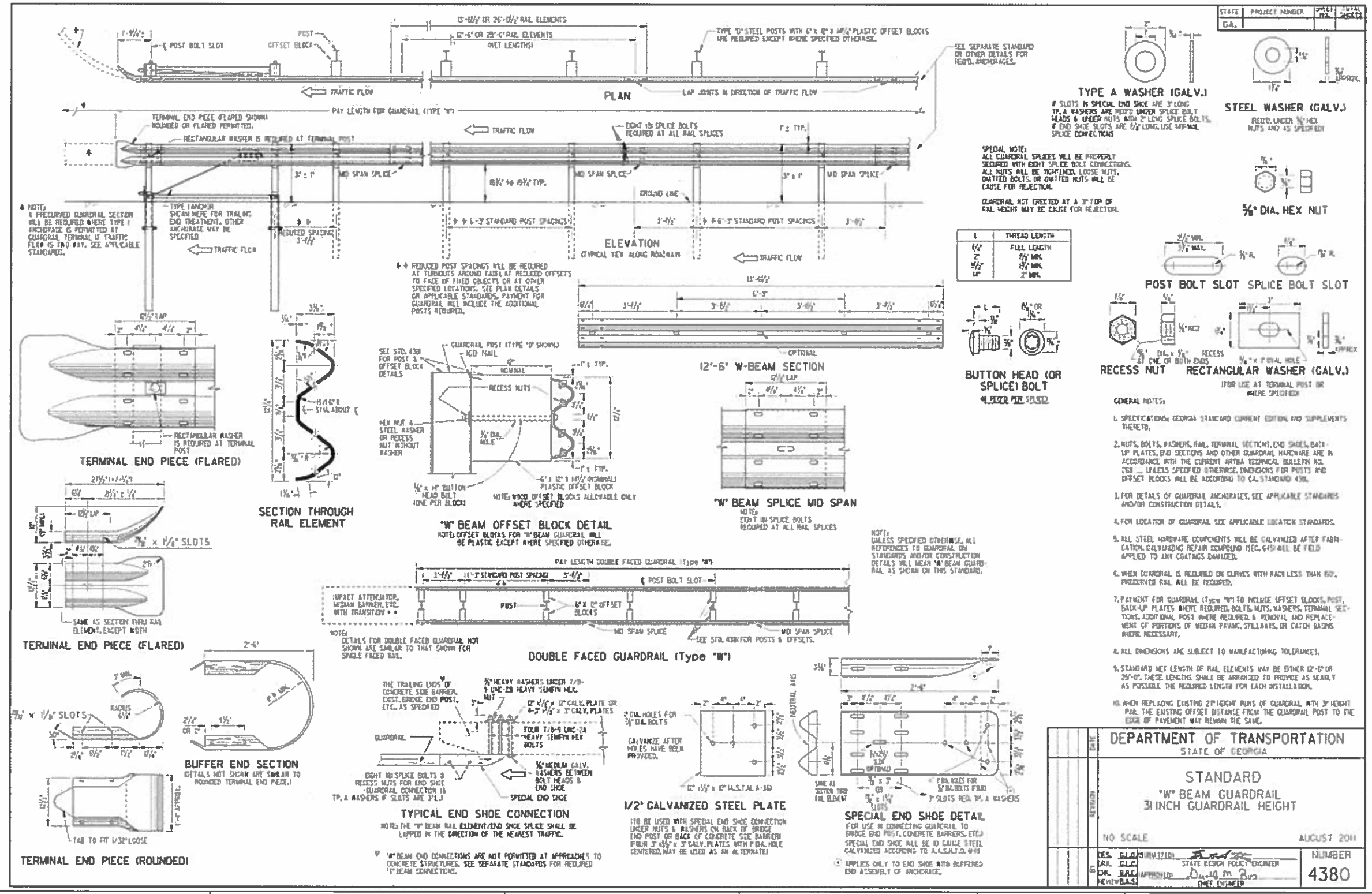

GENERAL NOTES:

1. SPECIFICATIONS: GEORGIA STANDARD CURRENT EDITION AND SUPPLEMENTS THERETO.
2. NUTS, BOLTS, WASHERS, RAIL, TERMINAL SECTIONS, END SHOES, BACK-UP PLATES, END SECTIONS AND OTHER GUARDRAIL HARDWARE ARE IN ACCORDANCE WITH THE CURRENT AASHTO TECHNICAL BULLETIN NO. 268 — UNLESS SPECIFIED OTHERWISE. DIMENSIONS FOR POSTS AND OFFSET BLOCKS WILL BE ACCORDING TO GA. STANDARD 4380.
3. FOR DETAILS OF GUARDRAIL ANCHORAGES, SEE APPLICABLE STANDARDS AND/OR CONSTRUCTION DETAILS.
4. FOR LOCATION OF GUARDRAIL SEE APPLICABLE LOCATION STANDARDS.
5. ALL STEEL HARDWARE COMPONENTS WILL BE GALVANIZED AFTER FABRICATION. GALVANIZING REPAIR COMPOUND MEC. 6450 WILL BE FIELD APPLIED TO ANY COATINGS DAMAGED.
6. WHEN GUARDRAIL IS REQUIRED ON CURVES WITH RADII LESS THAN 600', PRECURVED RAIL WILL BE REQUIRED.
7. PAYMENT FOR GUARDRAIL (Type "W") TO INCLUDE OFFSET BLOCKS, POST, BACK-UP PLATES WHERE REQUIRED, BOLTS, NUTS, WASHERS, TERMINAL SECTIONS, ADDITIONAL POST WHERE REQUIRED, & REMOVAL AND REPLACEMENT OF PORTIONS OF MEDIAN PAVING, SPILLWAYS, OR CATCH BASINS WHERE NECESSARY.
8. ALL DIMENSIONS ARE SUBJECT TO MANUFACTURING TOLERANCES.
9. STANDARD NET LENGTH OF RAIL ELEMENTS MAY BE EITHER 12'-6" OR 25'-0". THESE LENGTHS SHALL BE ARRANGED TO PROVIDE AS NEARLY AS POSSIBLE THE REQUIRED LENGTH FOR EACH INSTALLATION.
10. WHEN REPLACING EXISTING 27" HEIGHT RUNS OF GUARDRAIL WITH 31" HEIGHT RAIL, THE EXISTING OFFSET DISTANCE FROM THE GUARDRAIL POST TO THE EDGE OF PAVEMENT MAY REMAIN THE SAME.

L	THREAD LENGTH
1 1/2"	FULL LENGTH
2"	1 1/2" MIN.
2 1/2"	1 3/4" MIN.
4"	2" MIN.

SPECIAL NOTE:
ALL GUARDRAIL SPLICES WILL BE PREREPAIR SECURED WITH EIGHT SPLICE BOLT CONNECTIONS. ALL NUTS WILL BE TIGHTENED. LOOSE NUTS, OMITTED BOLTS, OR OMITTED NUTS WILL BE CAUSE FOR REJECTION.

GUARDRAIL NOT ERECTED AT A 31" TOP OF RAIL HEIGHT MAY BE CAUSE FOR REJECTION.

DEPARTMENT OF TRANSPORTATION
STATE OF GEORGIA

STANDARD
"W" BEAM GUARDRAIL
31 INCH GUARDRAIL HEIGHT

NO SCALE — AUGUST 2011

DES. G.L.O. DRN. C.L.P. CK. R.R.C. REVIEW B.A.S.
SUBMITTED: STATE DESIGN POLICY ENGINEER
APPROVED: CHIEF ENGINEER

NUMBER 4380

AECOM

REVISION DATES

DEKALB COUNTY
DEPARTMENT OF TRANSPORTATION

GEORGIA STANDARDS

CONSTITUTION ROAD AND KEY ROAD
BRIDGES OVER INTRENCHMENT CREEK

DRAWING NO. 41-005

COUNTY	PROJECT NUMBER	SHEET NO.	TOTAL SHEETS
DEKALB	0012613		73

STATE	PROJECT NUMBER	SHEET NO.	TOTAL SHEETS
GA.			

TYPE A WOOD POST (FOR "W" BEAM GUARDRAIL)

NOTE: WOOD POST ARE ALLOWABLE ONLY WHERE SPECIFIED.

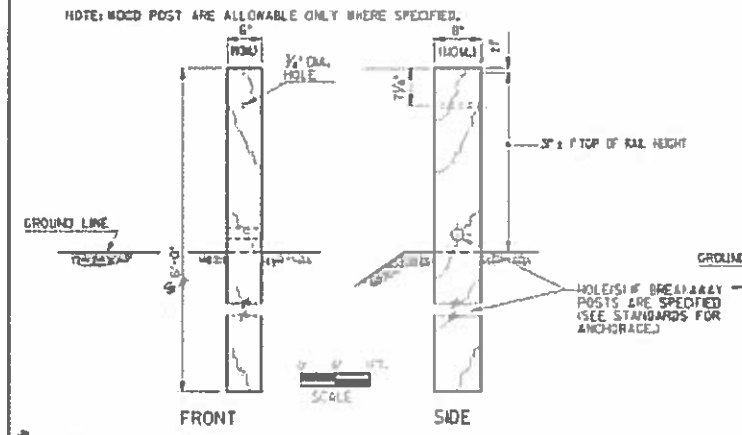

*SEE SEPARATE STANDARD OR DETAIL FOR POSTS IN TUBE SLEEVE.

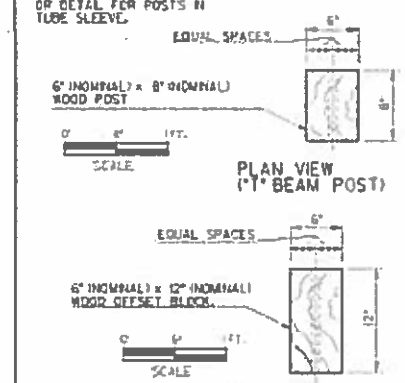

WOOD POSTS AND WOOD OFFSET BLOCKS MAY BE ROUGH OR SURFACED.

DIMENSIONS FOR WOOD POSTS AND WOOD OFFSET BLOCKS ARE NOMINAL IN ACCORDANCE WITH ACCEPTED LUMBER INDUSTRY STANDARDS.

TYPE D STEEL POST (FOR "W" BEAM GUARDRAIL)

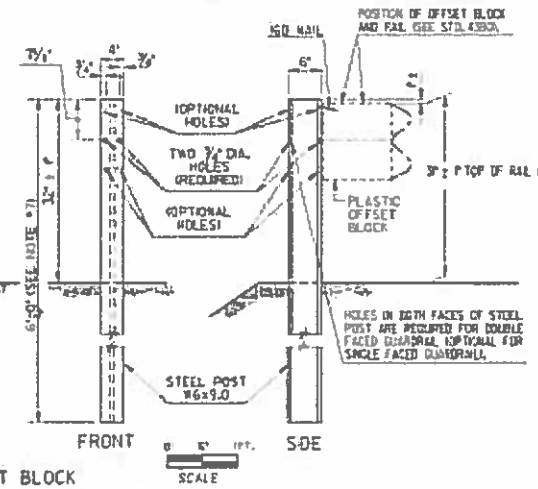

TYPE D-T STEEL POST (FOR "T" BEAM GUARDRAIL)

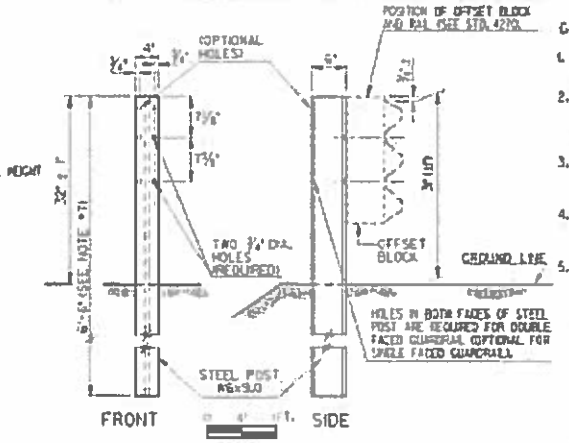

GENERAL NOTES:

1. SPECIFICATIONS: GEORGIA STANDARD, CURRENT EDITION AND SUPPLEMENTS THERETO.
2. STEEL POSTS MAY BE EITHER ROLLED OR WELDED STRUCTURAL SHAPES. STEEL OFFSET BLOCKS SHALL BE ROLLED. WELDED POSTS SHALL BE SEAL WELDED BETWEEN WEB AND FLANGE BEFORE GALVANIZING.
3. WHERE WOOD POST OR WOOD OFFSET BLOCKS ARE PERMITTED, THE WOOD SHALL BE TREATED IN ACCORDANCE WITH GEORGIA STANDARD SPECIFICATIONS.
4. ALL BOLTS USED FOR FASTENING THE RAIL AND OFFSET BLOCKS TO WOOD POSTS SHALL HAVE SUFFICIENT LENGTH TO EXTEND AT LEAST 1/4" BEYOND THE FULL NUT, UP TO 3" BEYOND.
5. (a) "W" BEAM GUARDRAIL: ALL OFFSET BLOCKS SHALL BE 12" DEPTH PLASTIC BLOCKS EXCEPT FOR (d) BELOW.

   (b) "T" BEAM GUARDRAIL: STANDARD INSTALLATION WILL USE 8" DEPTH PLASTIC BLOCKS UNLESS OTHERWISE APPROVED.

   (c) (3)3/4" DEPTH MODIFIED STEEL OFFSETS MAY BE SPECIFIED WHERE JUSTIFIED FOR MORE SEVERE CONDITIONS. PAY ITEM IS --GUARDRAIL, TP T, MODIFIED OFFSET BLOCK---PER LIN. FT.

   (d) WOOD OFFSET BLOCKS MAY BE USED ONLY AT AN ISOLATED LOCATION WITHIN A RUN OF GUARDRAIL, WHERE OTHER BLOCK TYPES WOULD NOT PROVIDE PROPER FIT, AS DETERMINED BY THE ENGINEER OR SHOWN IN THE PLANS.
6. POSTS WILL BE SPACED AT 6'-3" C. TO C. UNLESS OTHERWISE NOTED.
7. ADDITIONAL LENGTH POSTS, WHERE SPECIFIED, SHALL BE 7'-0" AND 7'-6" LONG FOR "W" BEAM AND "T" BEAM GUARDRAILS RESPECTIVELY, WITH HOLES DIMENSIONED FROM THE POST-TOP THE SAME AS SHOWN.
8. 9'-0" POST REQUIRED IF GUARDRAIL INSTALLED ON A 2:1 SLOPE.

MODIFIED STEEL OFFSET BLOCK FOR "T" BEAM GUARDRAIL

NOTE: MODIFIED STEEL OFFSET BLOCKS ARE USED ONLY WHERE SPECIFIED SEE NOTE 5(c)

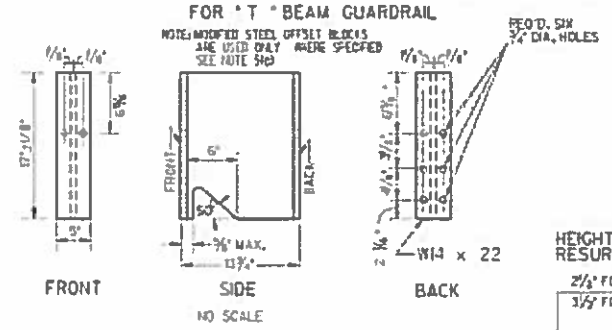

HEIGHT CORRECTION IF NEEDED FOR RESURFACED PROJECTS

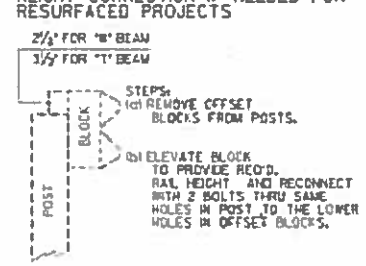

BACK-UP PLATE (FOR "T" BEAM GUARDRAIL)

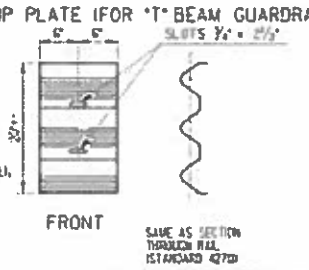

NOTE: BACK-UP PLATES ARE REQUIRED WITH ALL STEEL OFFSET BLOCKS EXCEPT AT RAIL SPLICES OR WHERE ONE RAIL SECTION IS NESTED INSIDE ANOTHER RAIL SECTION. BACK-UP PLATE WILL BE LOCATED BACK OF RAIL ADJACENT TO OFFSET BLOCKS INSIDE MAIN RAIL.

NOTE: WHERE WOOD OFFSET BLOCK ON STEEL POST IS PERMITTED ON "W" BEAM INSTALLATION, A NAIL OR SCREW FROM POST TO WOOD IS REQUIRED TO PREVENT ROTATION OF THE BLOCK.

WOOD OFFSET BLOCKS

(WHERE PERMITTED, SEE NOTE 5(d))

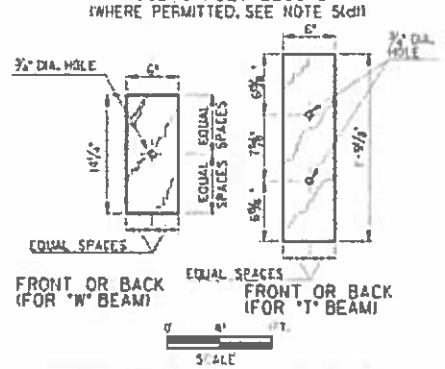

(PLAN VIEW IS SAME AS SHOWN FOR WOOD POST ABOVE)

STANDARD PLASTIC OFFSET BLOCKS

NOTE: PLASTIC OFFSET BLOCKS SHALL BE OF TYPE LISTED IN G.A. DOT QPL OF APPROVED PRODUCTS OR PER STANDARD SPECIFICATIONS.

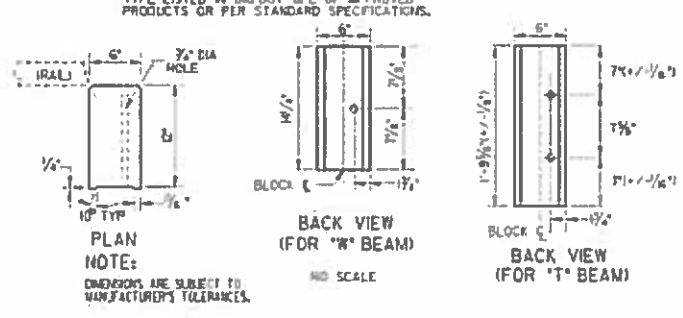

NOTE: DIMENSIONS ARE SUBJECT TO MANUFACTURER'S TOLERANCES.

CONCRETE FOUNDATION FOR POST IN SHALLOW FILLS OVER CULVERTS OR OTHER OBSTRUCTIONS

(NOTE: PLATE MOUNTED POST MAY BE USED AS AN ALTERNATE, SEE SEPARATE SHEET).

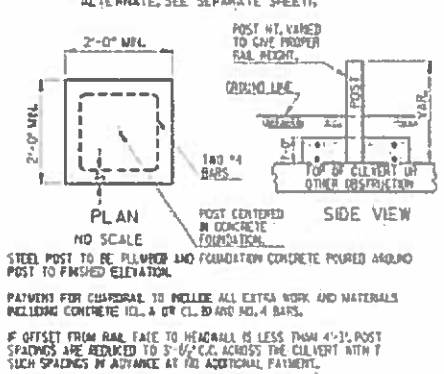

STEEL POST TO BE PLUMBER AND FOUNDATION CONCRETE POURED AROUND POST TO FINISHED ELEVATION.

PAYMENT FOR GUARDRAIL TO INCLUDE ALL EXTRA WORK AND MATERIALS INCLUDING CONCRETE (CL. A OR CL. B) AND NO. 4 BARS.

IF OFFSET FROM RAIL FACE TO HEADWALL IS LESS THAN 4'-3", POST SPACINGS ARE REDUCED TO 3'-1/2" C.C. ACROSS THE CULVERT WITH 7 SUCH SPACINGS IN ADVANCE AT NO ADDITIONAL PAYMENT.

2:1 SLOPE DETAIL

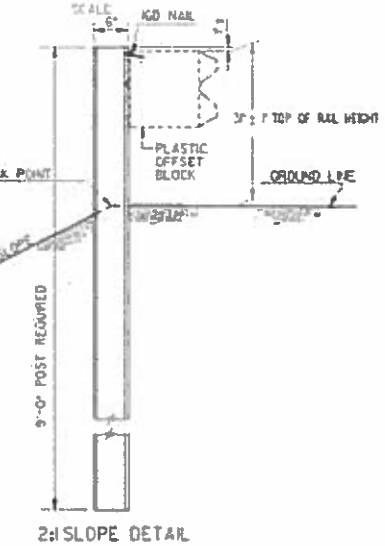

ADDITIONAL DEPTH OFFSET BLOCKOUTS

(FOR USE WHERE GREATER THAN STANDARD OFFSET IS SPECIFIED)

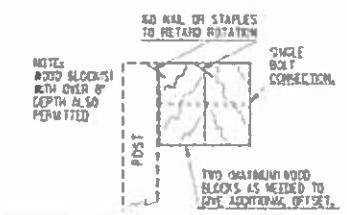

NOTE: ADDITIONAL DEPTH OFFSETS BELOW ARE SHOWN FOR "W" BEAM. SIMILAR OFFSETS MAY BE APPLIED FOR "T" BEAM GUARDRAIL.

NOTE: ADDITIONAL DEPTH OFFSETS ARE PERMITTED ONLY WHERE AN ISOLATED POST MUST BE PLACED AT A GREATER THAN NORMAL OFFSET.

NOTE: FOR BLOCK CONNECTION TO POST AND TO RAIL SEE STD. 4380 OR 4385.

DEPARTMENT OF TRANSPORTATION
STATE OF GEORGIA

STANDARD
POSTS AND OFFSET BLOCKS
FOR "W" & "T" BEAM GUARDRAIL
31 INCH GUARDRAIL HEIGHT

SCALE: AS SHOWN — AUGUST 2011

DES. G.L.B. DRN. G.L.B. CHK. B.R.C. REVIEW B.A.S.

SUBMITTED: STATE DESIGN POLICY ENGINEER
APPROVED: CHIEF ENGINEER

NUMBER 4381

AECOM

REVISION DATES		

DEKALB COUNTY
DEPARTMENT OF TRANSPORTATION

GEORGIA STANDARDS

CONSTITUTION ROAD AND KEY ROAD
BRIDGES OVER INTRENCHMENT CREEK

DRAWING NO. 41-006

11/20/2015 8:18:12 AM USER: brayl	gplotborder-V81-PO.lbl	P:\Projects_Legacy\ATL-P_Drive\1520\60427168 Dekalb County\900-CAD-GIS\910 CAD_BIM\912 - WADZ RC\DGN\RDY\07-9007177B-copy.dgn	COUNTY DEKALB	PROJECT NUMBER 001 261 3	SHEET NO.	TOTAL SHEETS 73

STATE	PROJECT NUMBER	SHEET NO.	TOTAL SHEETS
GA.			

31INCH HEIGH GUARDRAIL CONNECTION AT TRAILING ENDS

(SEE NOTE AT BOTTOM LEFT)

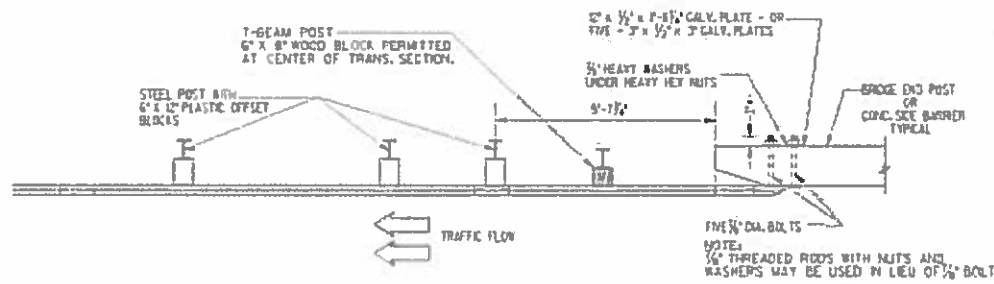

PLAN

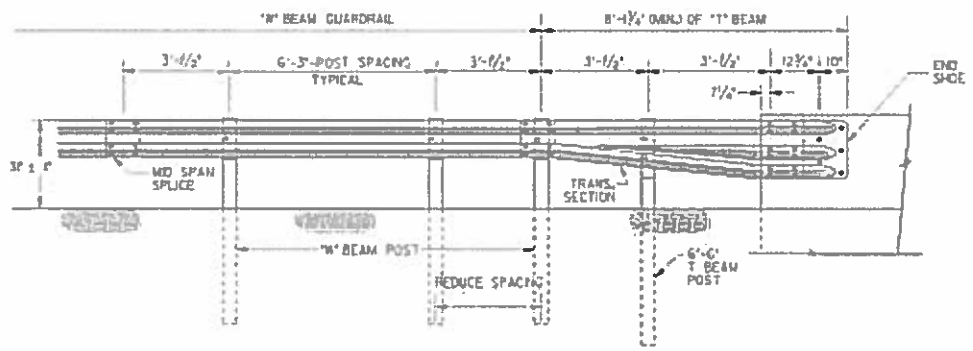

ELEVATION

NOTE:
DETAILS AT TOP LEFT ARE APPLICABLE FOR CONNECTIONS AT THE TRAILING ENDS OF ONE-WAY TRAFFIC OR AT THE TRAILING END OF MULTI-LANE (4 OR MORE) FACILITIES.

NOTE:
DETAILS AT TOP RIGHT ARE APPLICABLE FOR CONNECTIONS AT THE APPROACH ENDS OF BRIDGES OR CONCRETE SIDE BARRIERS OR AT ALL FOUR ENDS FOR TWO-LANE, TWO WAY TRAFFIC.

GUARDRAIL CONNECTION AT BRIDGE END (OR CONCRETE BARRIER)

(DETAILS ARE ILLUSTRATED WITH APPROACH SLAB, SPILLWAY, ETC. FOR TYPICAL BRIDGE END. POST SPACINGS AND END SHOE CONNECTION APPLIES TO ROADWAY CONCRETE BARRIER AS WELL AS BRIDGE ENDS.)

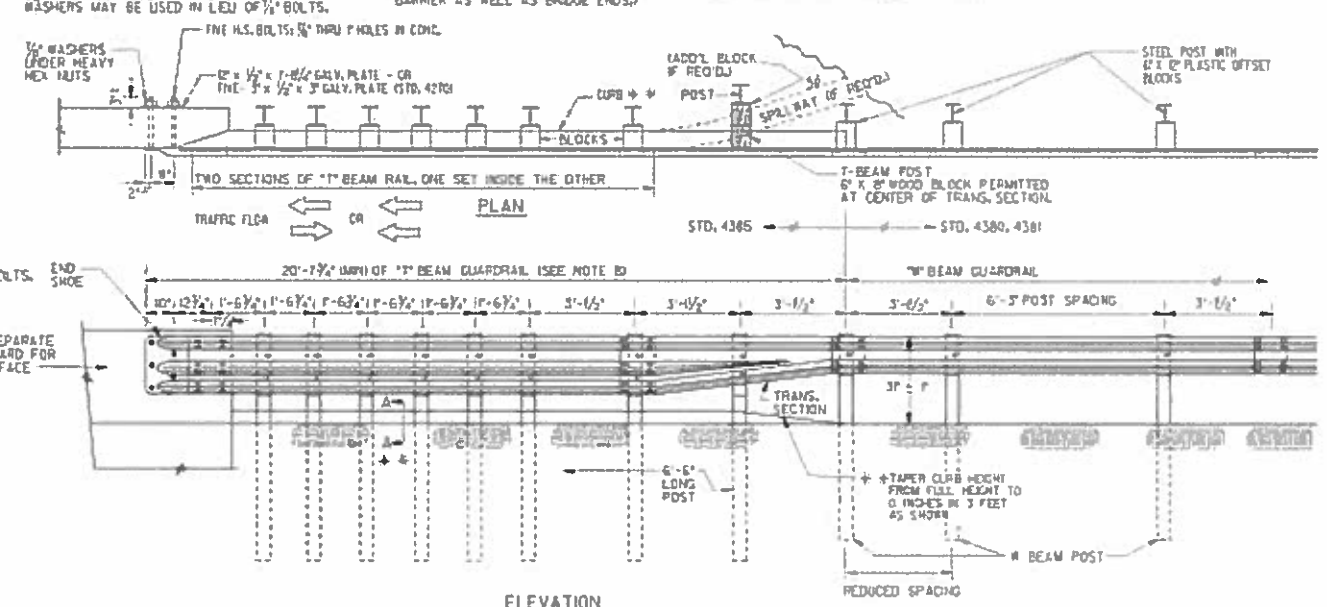

ELEVATION

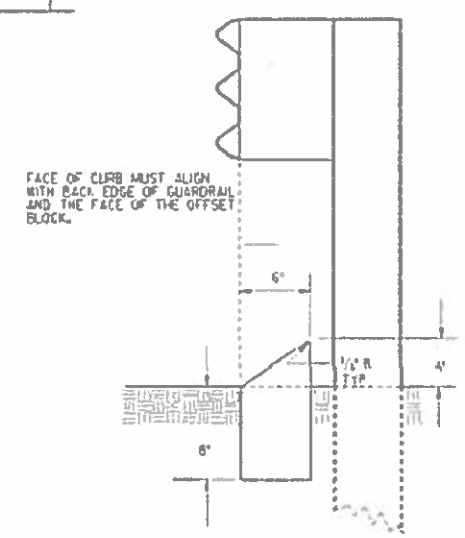

SECTION A-A + +

NOTES FOR GUARDRAIL CONNECTION:

A. WHERE GREATER THAN THE MAXIMUM LENGTH OF T-BEAM GUARDRAIL IS REQUIRED ADDITIONAL POST REMAIN AS SHOWN WITHIN THE FOUR 20'-7 3/4" LENGTHS, WITH NORMAL (6'-3" C. TO C.) SPACINGS FOR THE REMAINDER OF THE INSTALLATION (STD. 4385) UNLESS SPECIFIED OTHERWISE.

B. PAYMENT FOR GUARDRAIL TYPE T INCLUDES ALL ADDITIONAL POST, ALL ADDITIONAL OFFSET BLOCKS, THE SPECIAL END SHOE CONNECTION WITH ACCOMPANY HARDWARE, THE EXTRA SECTION OF "T" BEAM RAIL NESTED INSIDE THE OTHER, AND THE "T" BEAM TO "W" BEAM TRANSITION SECTION.

C. WHERE GUARDRAIL POST ARE ERECTED THRU SPILLWAY, CONCRETE CAP OR PAVING UNDER GUARDRAIL, PAYMENT FOR GUARDRAIL, OF ANY TYPE SHALL INCLUDE REPLACING THE BLOCKED OUT CONCRETE AND/OR REMOVING AND REPLACING PORTIONS OF SPILLWAY, CONCRETE, OR GROUT AS NECESSARY FOR POST INSTALLATIONS.

* + FOR CURB DETAILS ASSOCIATED WITH APPROACH SLAB, SEE APPROACH SLAB STANDARD. FOR GUARDRAIL INSTALLATION LOCATIONS WHERE AN APPROACH SLAB IS NOT USED, PROVIDE A CONCRETE CURB IN ACCORDANCE WITH SECTION "A-A". CONCRETE CURB SHALL BE PAID FOR PER LINEAR FOOT.

NOTE: POST SPACINGS SHOWN ARE TYPICAL AVERAGE WITH NORMAL CONSTRUCTION TOLERANCES ALLOWED.

GENERAL NOTES:

1. SPECIFICATIONS: GEORGIA STANDARD, CURRENT EDITION & SUPPLEMENTS THERETO.
2. FOR DETAILS OF GUARDRAIL HARDWARE, POST, OFFSET BLOCKS, END SHOE, TRANSITION SECTION, ETC., SEE SEPARATE STANDARDS AS APPLICABLE.
3. GUARDRAIL INSTALLATIONS, INCLUDING ANCHORAGES AND CONNECTIONS, ARE TO BE COMPLETED BEFORE BEING SUBJECT TO TRAFFIC UNLESS OTHERWISE APPROVED.
4. OFFSET BLOCKS SHALL BE PLASTIC UNLESS SPECIFIED OTHERWISE. OFFSET BLOCKS ARE REQUIRED AT ALL POSTS.
5. THE COST FOR DRILLING HOLES FOR THE END SHOE CONNECTION SHALL BE INCLUDED IN THE UNIT BID PRICE FOR THE GUARDRAIL.

DATE	REVISION	BY

DEPARTMENT OF TRANSPORTATION
STATE OF GEORGIA

STANDARD

GUARDRAIL CONNECTION AT BRIDGE END OR AT CONCRETE BARRIER END FOR 31INCH HIGH GUARDRAIL

NO SCALE — AUGUST 2011

DES. GLA — SUBMITTED: STATE DESIGN POLICY ENGINEER
DRN. GLA
CHK. RRE — APPROVED: CHIEF ENGINEER
REVIEWED BY

NUMBER 4382

AECOM

REVISION DATES		

DEKALB COUNTY
DEPARTMENT OF TRANSPORTATION

GEORGIA STANDARDS

CONSTITUTION ROAD AND KEY ROAD BRIDGES OVER INTRENCHMENT CREEK

DRAWING NO. 41-007

11/20/2015 8:18:27 AM USER:kroyt	gplotborder-V81-PO.tbl	P:\Projects_Legacy\ATL-P_Drive\152816042716B Dekalb County\900-CAD-GIS\910 CAD_BIM\912 - WADZ KC\DGN\07-90011718-copy.dgn	COUNTY DEKALB	PROJECT NUMBER 0012613	SHEET NO.	TOTAL SHEETS 73

STATE	PROJECT NUMBER	SHEET NO.	TOTAL SHEETS
GA.			

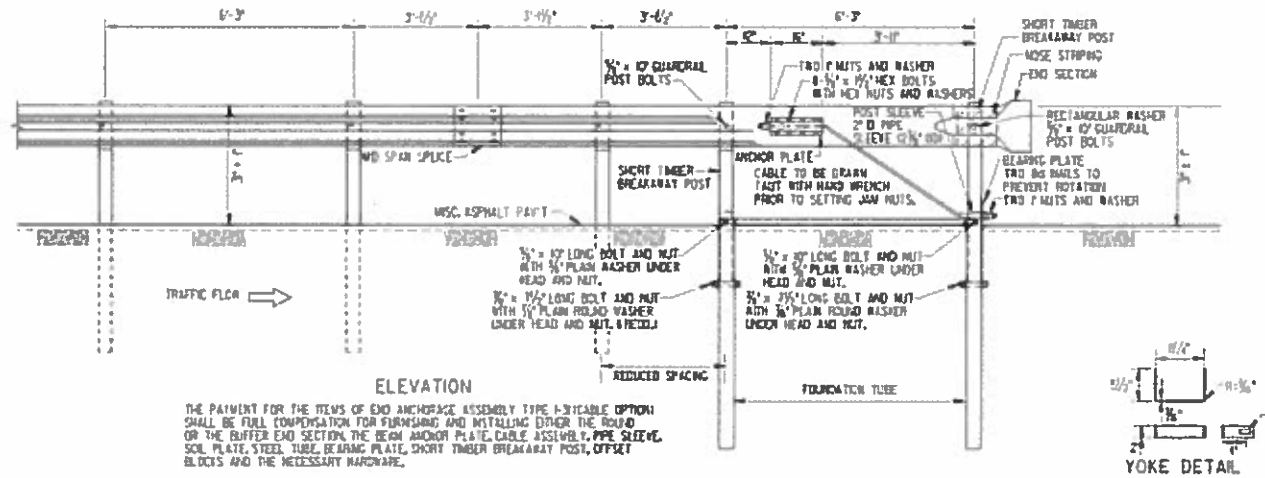

ELEVATION

THE PAYMENT FOR THE ITEMS OF END ANCHORAGE ASSEMBLY TYPE I-3(CABLE OPTION) SHALL BE FULL COMPENSATION FOR FURNISHING AND INSTALLING EITHER THE ROUND OR THE BUFFER END SECTION, THE BEAM ANCHOR PLATE, CABLE ASSEMBLY, PIPE SLEEVE, SOIL PLATE, STEEL TUBE, BEARING PLATE, SHORT TIMBER BREAKAWAY POST, OFFSET BLOCKS AND THE NECESSARY HARDWARE.

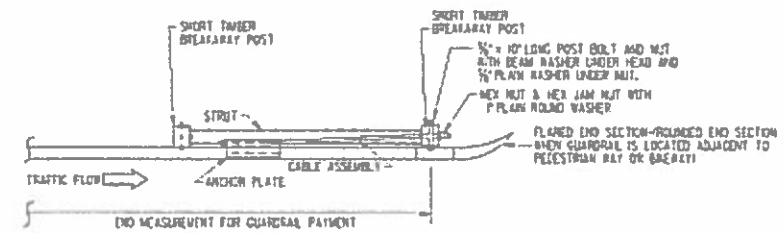

CABLE ANCHOR

YOKE DETAIL

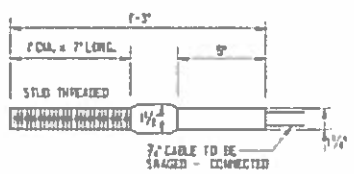

SWAGED FITTING AND STUD

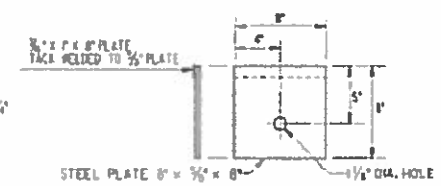

BEARING PLATE

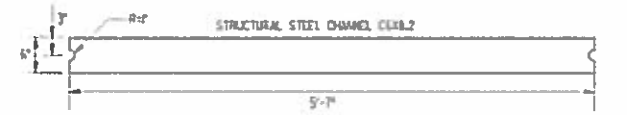

STRUT DETAIL

PLAN

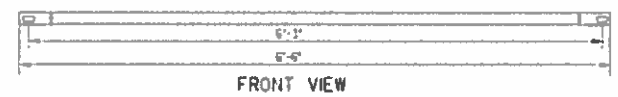

FRONT VIEW

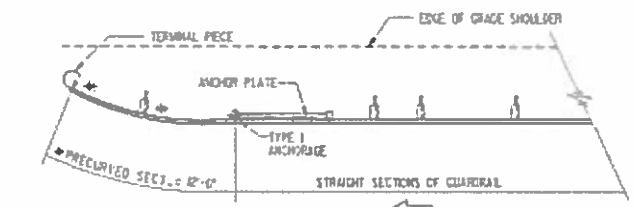

* PRECURVED SECTION SHALL UTILIZE POST OF THE SAME LENGTH AS REQUIRED FOR THE ADJOINING STRAIGHT SECTIONS, REGARDLESS OF DISTANCE TO GRADED SHOULDER EDGE.

AT TRAILING END OF TWO-WAY TRAFFIC (WHICH FALLS OUTSIDE CLEAR ZONE OF OPPOSING TRAFFIC)

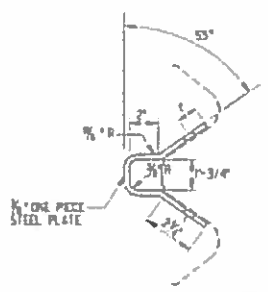

ANCHOR PLATE DETAIL

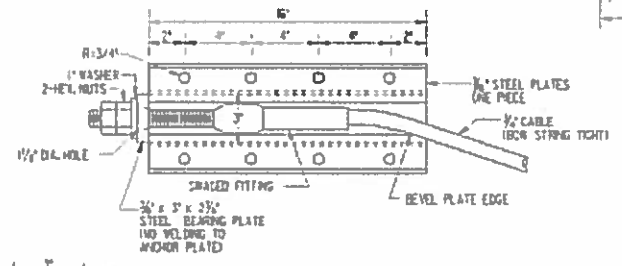

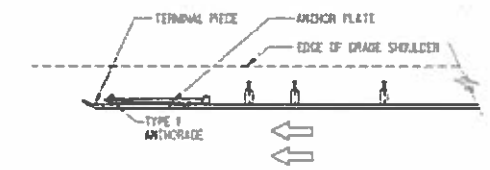

AT TRAILING END OF ONE-WAY TRAFFIC

NOTE:
SEE STD. 4380 OR OTHER APPLICABLE DETAILS FOR REQUIREMENT FOR TYPE II ANCHORAGE ON THE TRAILING END.

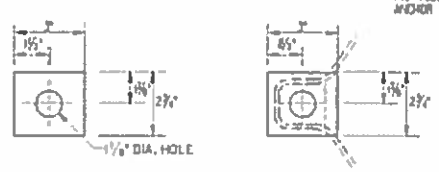

ANCHOR PLATE BEARING PLATE DETAIL

NOTE: ANCHOR PLATES SHOWN HERE WITH GUARDRAIL (TYPE "B") ATTACHMENT TO GUARDRAIL (TYPE "C") WILL BE THE SAME EXCEPT THAT THE ANCHOR PLATE WILL BE LOCATED BETWEEN THE BOTTOM AND MIDDLE CORRUGATIONS.

STANDARD ANCHOR PLATE DETAILS

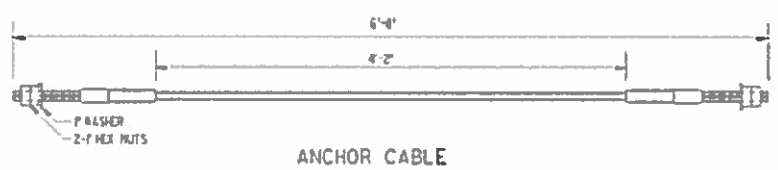

ANCHOR CABLE

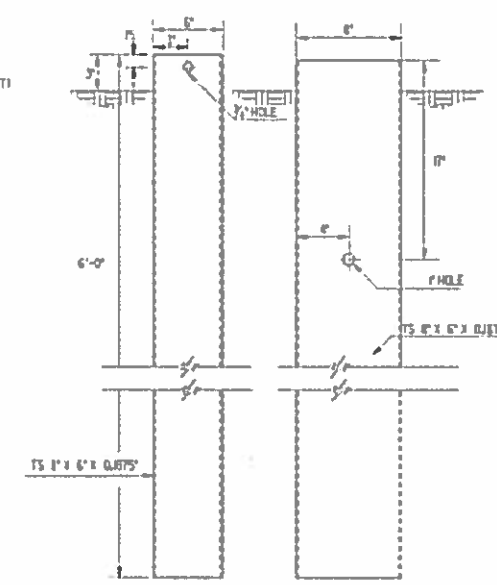

FRONT VIEW SIDE VIEW

FOUNDATION TUBE

NOTE: SEE STANDARD 4382 FOR GUARDRAIL CONNECTION TO CONCRETE FACE.

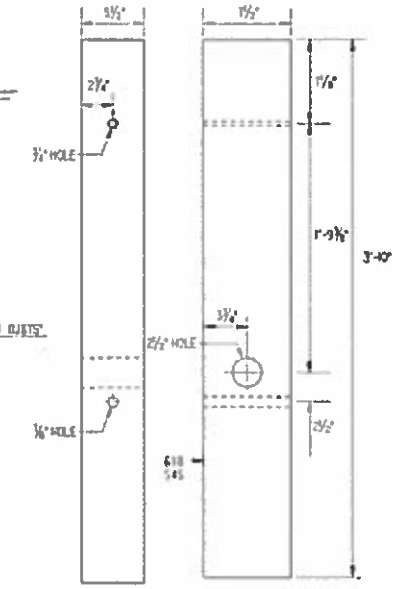

FRONT VIEW SIDE VIEW

SHORT TIMBER BREAKAWAY POST

GENERAL NOTES:
1. SPECIFICATIONS: GEORGIA STANDARD, CURRENT EDITION & SUPPLEMENTS THERE TO.
2. FOR DETAILS OF GUARDRAIL HARDWARE, POSTS, OTHER TYPE ANCHORAGE, LOCATION, ETC. SEE SEPARATE STANDARDS AS APPLICABLE.
3. GUARDRAIL INSTALLATIONS, INCLUDING ANCHORAGES AND CONNECTIONS, ARE TO BE COMPLETED BEFORE BEING SUBJECT TO TRAFFIC UNLESS OTHERWISE APPROVED.
4. PAYMENT FOR ANCHORAGE INCLUDES ANCHOR PLATE; 3/4" CABLE; BREAKAWAY POSTS; FOUNDATION TUBES; STRUT AND ALL ACCOMPANYING HARDWARE.

DATE	REVISION	BY

DEPARTMENT OF TRANSPORTATION
STATE OF GEORGIA

STANDARD

GUARDRAIL ANCHORAGE TYPE I
31INCH GUARDRAIL HEIGHT

NO SCALE — AUGUST 2011

DES. G.L.O. SUBMITTED — STATE DESIGN POLICY ENGINEER
DFT. G.L.O.
CHK. B.R.F. APPROVED — CHIEF ENGINEER
REVIEW B.A.S.

NUMBER 4383

AECOM

REVISION DATES		

DEKALB COUNTY
DEPARTMENT OF TRANSPORTATION

GEORGIA STANDARDS

CONSTITUTION ROAD AND KEY ROAD
BRIDGES OVER INTRENCHMENT CREEK

DRAWING NO. 41-008

11/20/2015
USER:abroyl

8:18:40 AM

gplotborder-V81-PO.tbl

P:\Projects_Legacy\ATL-P_Drive\152816042T160 Dekalb County\900-CAD-GIS\910 CAD_BIM\912 - WADZ KC\DGN\ADF\07-900T11TB-copy.dgn

COUNTY	PROJECT NUMBER	SHEET NO.	TOTAL SHEETS
DEKALB	0012613		73

STATE	PROJECT NUMBER	SHEET NO.	TOTAL SHEETS
GA.			

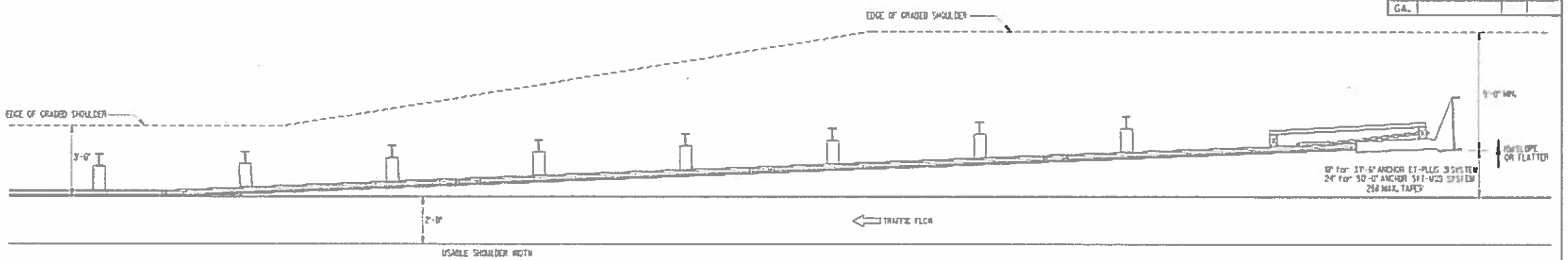

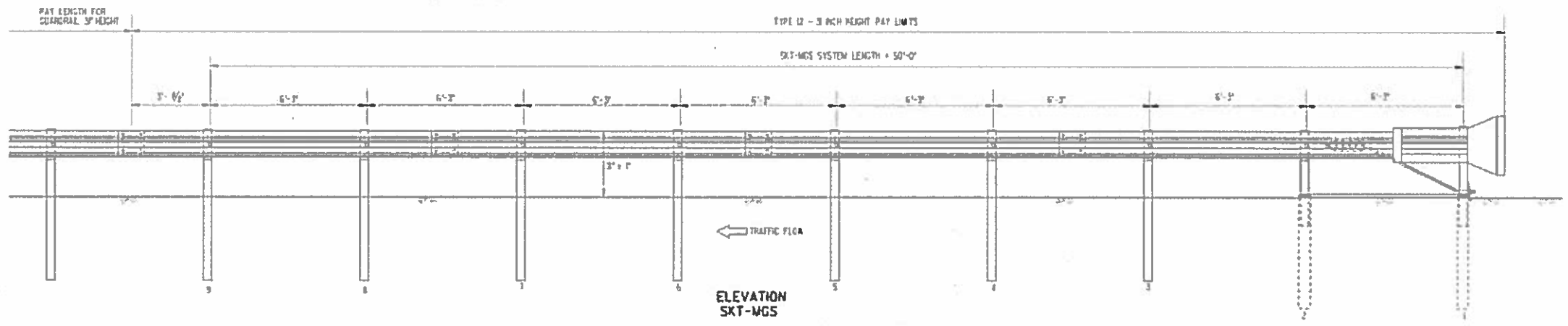

ELEVATION
SKT-MGS

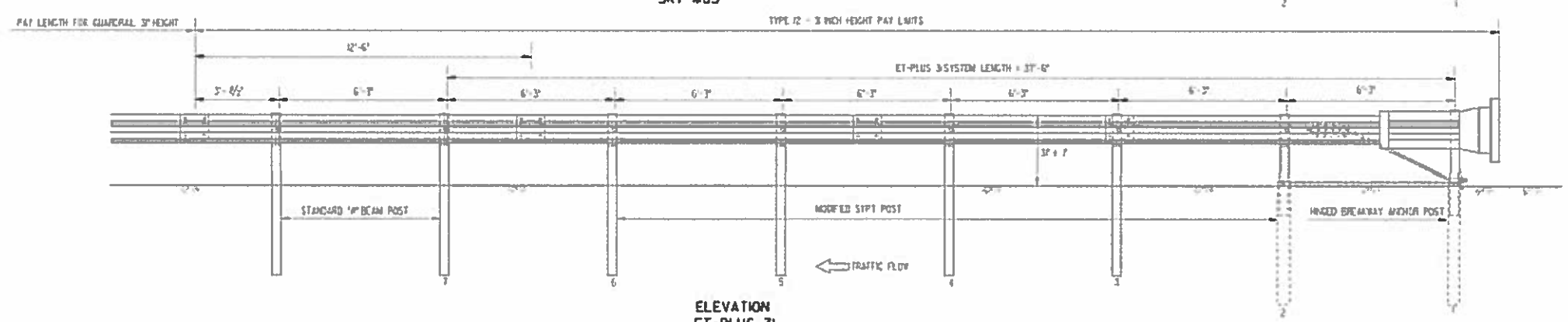

ELEVATION
ET-PLUS 31

GENERAL NOTES:

1. SPECIFICATIONS: GEORGIA STANDARD CURRENT EDITION, AND SUPPLEMENTS THERETO.
2. GUARDRAIL ANCHORAGE TYPE 12, 31 INCH HEIGHT SHALL BE AN ET-PLUS 31 AS MANUFACTURED BY TRINITY INDUSTRIES, INC. OR AN SKT-MGS AS MANUFACTURED BY ROAD SYSTEMS, INC. AND SHALL BE INSTALLED ACCORDING TO MANUFACTURER'S RECOMMENDATIONS.
3. A MINIMUM FLARE OF 15:1 OVER THE SYSTEM LENGTH OF THE TERMINAL IS REQUIRED FOR EITHER THE ET-PLUS 31 OR THE SKT-MGS.

DATE | REVISION | BY

DEPARTMENT OF TRANSPORTATION
STATE OF GEORGIA

STANDARD

TYPE 12
31 INCH GUARDRAIL HEIGHT

NO SCALE — AUGUST 2011

DES. S.L.D.
DRN. S.L.D.
CK. B.B.E.
REVIEW R.A.S.

SUBMITTED: STATE DESIGN POLICY ENGINEER
APPROVED: CHIEF ENGINEER

NUMBER 4384

AECOM

REVISION DATES		

DEKALB COUNTY
DEPARTMENT OF TRANSPORTATION

GEORGIA STANDARDS

CONSTITUTION ROAD AND KEY ROAD
BRIDGES OVER INTRENCHMENT CREEK

DRAWING NO. 41-009

COUNTY	PROJECT NUMBER	SHEET NO.	TOTAL SHEETS
DEKALB	0012613		73

STATE	PROJECT NUMBER	SHEET NO.	TOTAL SHEETS
GA.			

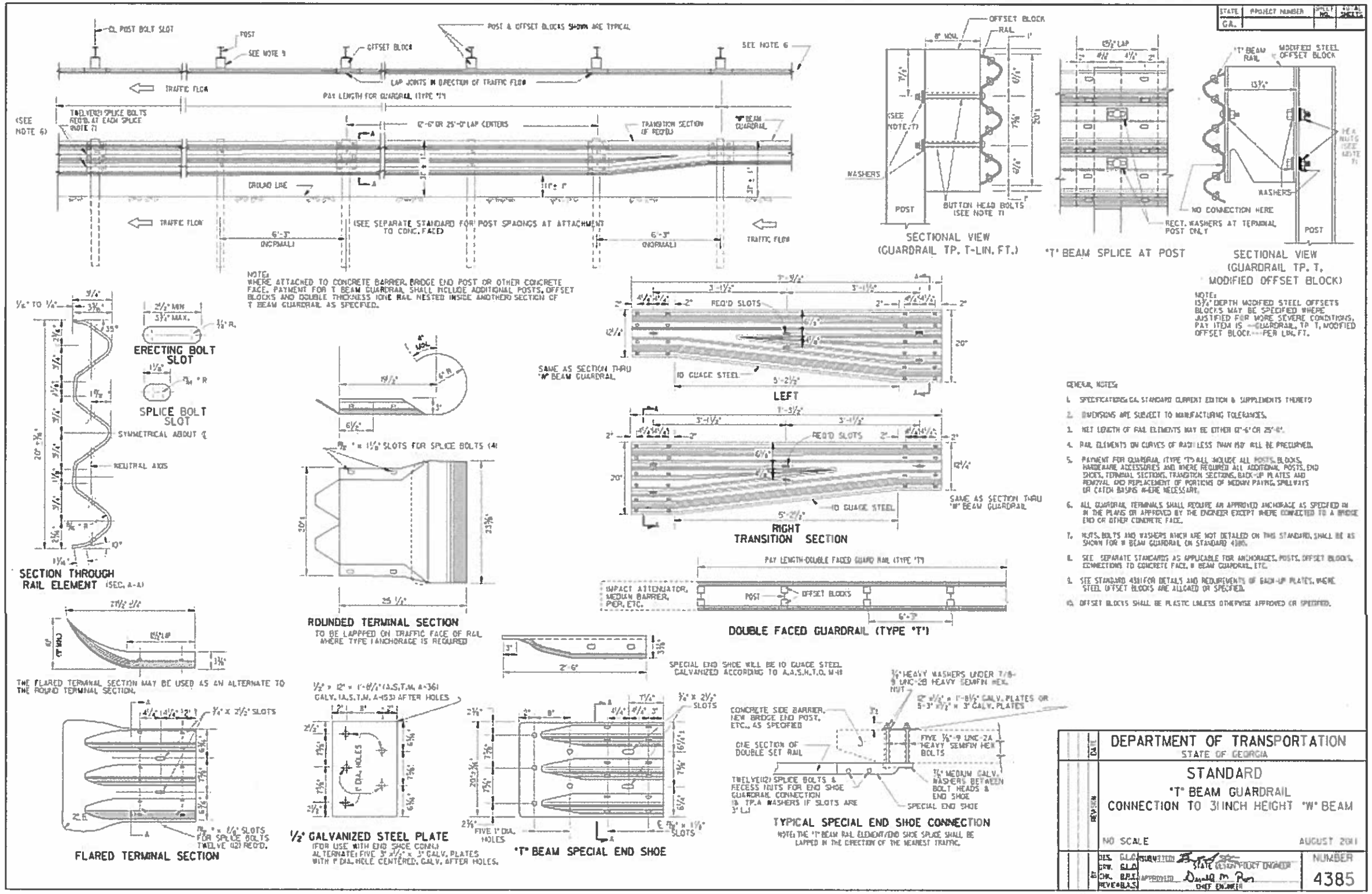

GENERAL NOTES:

1. SPECIFICATIONS: GA. STANDARD (CURRENT EDITION & SUPPLEMENTS THERETO)
2. DIMENSIONS ARE SUBJECT TO MANUFACTURING TOLERANCES.
3. NET LENGTH OF RAIL ELEMENTS MAY BE EITHER 12'-6" OR 25'-0".
4. RAIL ELEMENTS ON CURVES OF RADII LESS THAN 150' WILL BE PRECURVED.
5. PAYMENT FOR GUARDRAIL (TYPE "T") WILL INCLUDE ALL POSTS, BLOCKS, HARDWARE ACCESSORIES AND WHERE REQUIRED ALL ADDITIONAL POSTS, END SHOES, TERMINAL SECTIONS, TRANSITION SECTIONS, BACK-UP PLATES AND REMOVAL AND REPLACEMENT OF PORTIONS OF MEDIAN PAVING, SPILLWAYS OR CATCH BASINS WHERE NECESSARY.
6. ALL GUARDRAIL TERMINALS SHALL REQUIRE AN APPROVED ANCHORAGE AS SPECIFIED IN IN THE PLANS OR APPROVED BY THE ENGINEER EXCEPT WHERE CONNECTED TO A BRIDGE END OR OTHER CONCRETE FACE.
7. NUTS, BOLTS AND WASHERS WHICH ARE NOT DETAILED ON THIS STANDARD, SHALL BE AS SHOWN FOR W BEAM GUARDRAIL ON STANDARD 4386.
8. SEE SEPARATE STANDARDS AS APPLICABLE FOR ANCHORAGES, POSTS, OFFSET BLOCKS, CONNECTIONS TO CONCRETE FACE, W BEAM GUARDRAIL, ETC.
9. SEE STANDARD 4381 FOR DETAILS AND REQUIREMENTS OF BACK-UP PLATES, WHERE STEEL OFFSET BLOCKS ARE ALLOWED OR SPECIFIED.
10. OFFSET BLOCKS SHALL BE PLASTIC UNLESS OTHERWISE APPROVED OR SPECIFIED.

DEPARTMENT OF TRANSPORTATION
STATE OF GEORGIA

STANDARD
"T" BEAM GUARDRAIL
CONNECTION TO 31 INCH HEIGHT "W" BEAM

NO SCALE — AUGUST 2011

DES. G.L.A. — SURVEYED — STATE ROADWAY PROJECT ENGINEER
DRW. G.L.A.
CHK. B.P.E. — APPROVED — CHIEF ENGINEER
REVIEW B.A.S.

NUMBER 4385

AECOM

REVISION DATES		

DEKALB COUNTY
DEPARTMENT OF TRANSPORTATION

GEORGIA STANDARDS

CONSTITUTION ROAD AND KEY ROAD
BRIDGES OVER INTRENCHMENT CREEK

DRAWING NO. 41-010

11/20/2015 8:19:11 AM
USER:broyl
gplotborder-V81-PO.tbl
P:\Projects_Legacy\ATL-P_Drive\1528\60427168 Dekalb County\900-CAD-GIS\910 CAD_BIM\912 - WADZ KC\DGN\RDY\07-90071TTB-copy.dgn

COUNTY	PROJECT NUMBER	SHEET NO.	TOTAL SHEETS
DEKALB	0012613		73

STATE	PROJECT NUMBER	SHEET NO.	TOTAL SHEETS
GA.			

NOTE:
FOR MINIMAL REDUCTION (TO 2') OF SHOULDER ACROSS BRIDGE, ALIGNMENT SHALL BE STRAIGHT FOR SHORT INSTALLATIONS (LESS THAN 200' TOTAL) AS SHOWN HEREON. FOR LONGER INSTALLATIONS, OR GREATER REDUCTION OF SHOULDER WIDTH, GUARDRAIL INSTALLATION SHALL BE AS PER DETAIL AT BOTTOM MIDDLE.

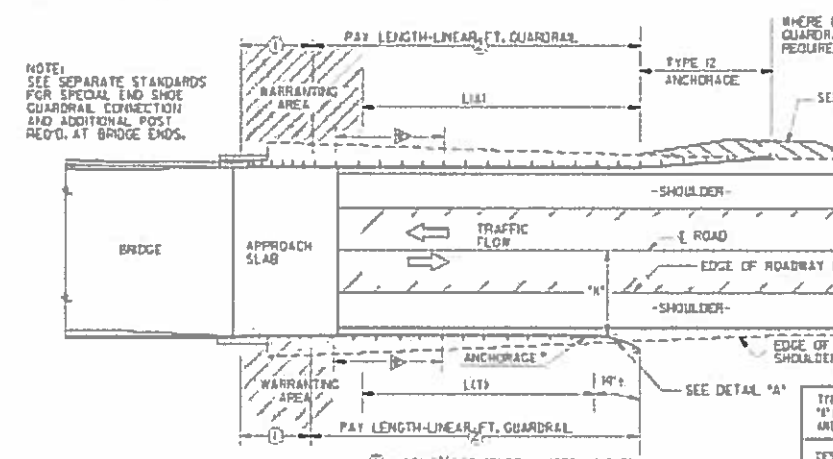

① = 20'-7¼" OF "T" BEAM (STD. 4042-C)
② = VARIABLE LENGTH OF "W" BEAM 16'-3" POST SPACI

TRAFFIC VOLUME	MIN. L(1)	MIN. L(2)
DHV OVER 400	100'-0"	137'-6"
DHV 200-400	87'-6"	125'-0"
DHV 100-200	75'-0"	112'-6"
ADT 400 & OVER	62'-6"	100'-0"
ADT UNDER 400	50'-0"	87'-6"

NOTE: THESE MINIMUM LENGTHS ARE FOR STRAIGHT ALIGNMENTS IN ADVANCE OF WARRANTING AREA.

GUARDRAIL LOCATION AT BRIDGE ENDS

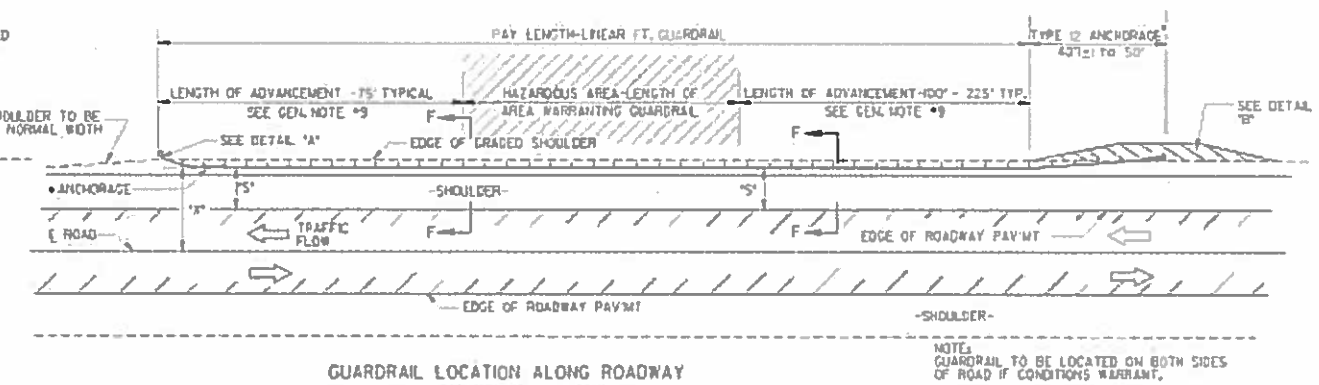

NOTE:
GUARDRAIL TO BE LOCATED ON BOTH SIDES OF ROAD IF CONDITIONS WARRANT.

GUARDRAIL LOCATION ALONG ROADWAY

TYPE 1 ANCHORAGES ♦ WILL BE UTILIZED AT THE TRAILING END, UNLESS THE DISTANCE "X" IS LESS THAN THE PARAMETER GIVEN IN THIS TABLE IN WHICH CASE TYPE 12 ANCHORAGES SHALL BE REQUIRED.

DESIGN TRAFFIC VOLUME	DESIGN SPEEDS (AS SHOWN ON COVER SHEET)				
	40 MPH	50 MPH	55 MPH	60 MPH	70 MPH
OVER 6000 A.D.T.	14'	18'	22'	30'	30'
1500 - 6000 A.D.T.	12'	16'	20'	26'	28'
750 - 1500 A.D.T.	10'	12'	16'	20'	24'
UNDER 750 A.D.T.	7'	10'	12'	16'	20'

"S" IS THE OFFSET TO THE FACE OF THE GUARDRAIL; THIS WILL BE TWO(2) FEET GREATER THAN THE USABLE SHOULDER WIDTH (PER AASHTO MINIMUM SHOULDER REQUIREMENTS) EXCEPT WHERE THE CURRENT A.D.T. IS UNDER 400, IN WHICH CASE "S" MAY BE EQUAL TO THE USABLE OR GRADED SHOULDER WIDTH (NOT LESS THAN 4).

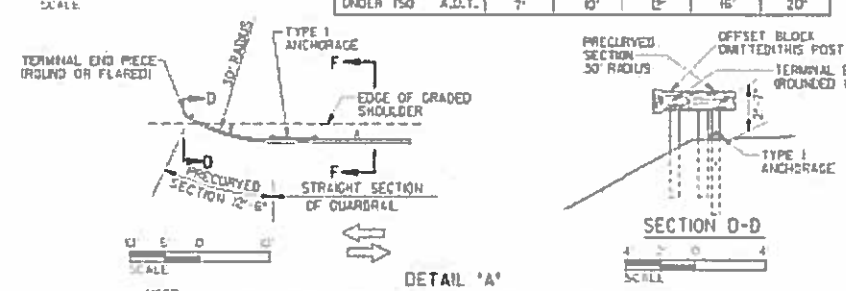

DETAIL "A"

NOTE:
DETAIL "A" IS FOR USE ONLY WHERE TYPE 1 ANCHORAGES ARE PERMITTED AS SHOWN ABOVE OTHERWISE, SEE DETAIL "B" FOR PROPER INSTALLATION OF TYPE 12 ANCHORAGE.

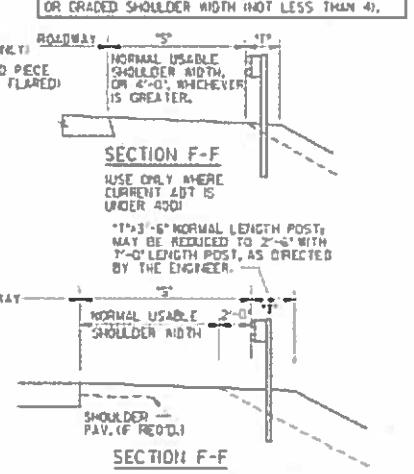

GENERAL NOTES:

1. GUARDRAIL, ITS FITTINGS, PARTS, ETC. ARE TO BE IN ACCORDANCE WITH GEORGIA STANDARD SPECIFICATIONS AND/OR SPECIAL PROVISIONS.
2. FOR DETAILS OF BEAM TYPE GUARDRAIL, ACCESSORIES, GUARDRAIL POST, OFFSET BLOCKS, GUARDRAIL ANCHORAGES TYPE 1 AND TYPE 12, & BRIDGE END CONNECTION DETAILS, SEE APPLICABLE GEORGIA STANDARD PLANS AND/OR CONSTRUCTION DETAILS.
3. ALL OFFSET AND LENGTHS HERE SHOWN ARE APPLIED TO FACE OF GUARDRAIL.
4. POST SPACING SHALL BE 6'-3" C. TO C., UNLESS OTHERWISE NOTED.
5. TYPE 12 ANCHORAGES SHOULD BE TERMINATED ON SLOPES 10:1 OR FLATTER. WHERE NORMAL SLOPE IS STEEPER, A 10:1 OR FLATTER SLOPE SHOULD BE CONSTRUCTED AT LOCATIONS WHERE TYPE 12 ANCHOR FLARES BACK OF SHOULDER.
6. GUARDRAIL SHALL NOT BE ERECTED ON SLOPES WHICH ARE STEEPER THAN 10:1, EXCEPT FOR THE PORTION OF PRECURVED (SHOP CURVED) SECTION THAT EXTENDS BACK OF THE SHOULDER AS SHOWN IN DETAIL "A" WHICH IS ERECTED ON NORMAL SLOPES OR EXCEPT WHERE SHOWN OTHERWISE IN PLANS.
7. PAY LENGTH SHALL BE MEASURED ALONG FACE OF GUARDRAIL.
8. W-BEAM GUARDRAIL WILL HAVE A CONSTANT TOP OF RAIL HT. OF 2'-7" THRU OUT INSTALLATION EXCEPT WHERE A PORTION OF THE PRECURVED SECTION SHOWN IN DETAIL "A" EXTENDS BACK OF THE GRADED SHOULDER.
9. GUARDRAIL WILL EXTEND PAST HAZARD ON BOTH THE APPROACH & TRAILING ENDS TO PREVENT VEHICLE PENETRATION BEHIND THE RAIL INTO THE HAZARDOUS AREA. THE TYPICAL LENGTHS OF ADVANCEMENT SHOWN MAY BE INCREASED OR DECREASED WHEN SHOWN IN THE PLANS, OR WHERE DIRECTED BY THE ENGINEER BECAUSE OF SPEED DESIGN, ROADSIDE GEOMETRY, SIZE OF HAZARD, OR OTHER CONDITIONS. IF FURTHER INFORMATION IS DESIRED, SEE THE AASHTO "ROADSIDE DESIGN GUIDE".

SPECIAL NOTE:
LOCATION AND QUANTITIES GIVEN IN THE PLANS FOR GUARDRAIL AND ANCHORAGES ARE ESTIMATES MADE FROM OFFICE COMPUTATIONS. A FINAL DETERMINATION AS TO LOCATIONS AND QUANTITIES OF GUARDRAIL AND ANCHORAGES WILL BE MADE BY THE ENGINEER OR A REPRESENTATIVE FROM THE OFFICE OF TRAFFIC OPERATIONS AFTER CONSTRUCTION OF ROADWAY.

♦ OR APPROVED ALTERNATE, MEETING MANUAL FOR ASSESSING SAFETY HARDWARE(MASH) REQUIREMENTS

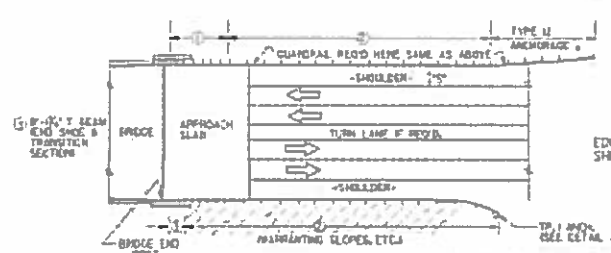

NOTE: GUARDRAIL IS NOT REQUIRED ON THIS SIDE UNLESS WARRANTED BY ROAD SIDE CONDITIONS.

GUARDRAIL AT BRIDGE END OF MULTI-LANE UNDIVIDED HIGHWAY

NO SCALE

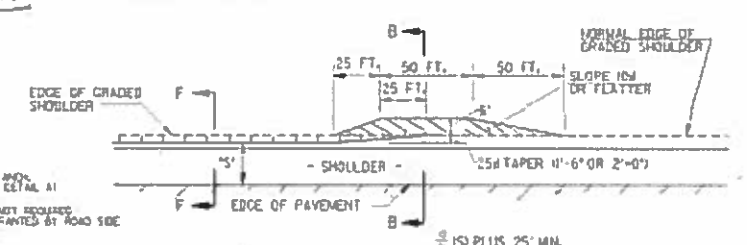

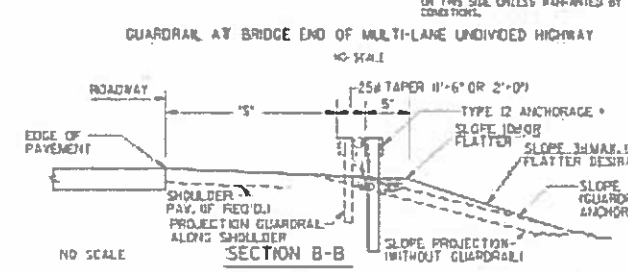

NO SCALE

SECTION B-B

DETAIL "B"

WHERE SHOWN ON THE PLANS OR APPROVED BY THE ENGINEER, THE EMBANKMENT FLARE SHOWN ABOVE FOR TYPE 1 ANCHORAGE MAY BE MODIFIED, PROVIDED 10:1 OR FLATTER SLOPES ARE PROVIDED IN FRONT OF THE RAIL & A CONSTANT 31INCH RAIL HEIGHT IS MAINTAINED.

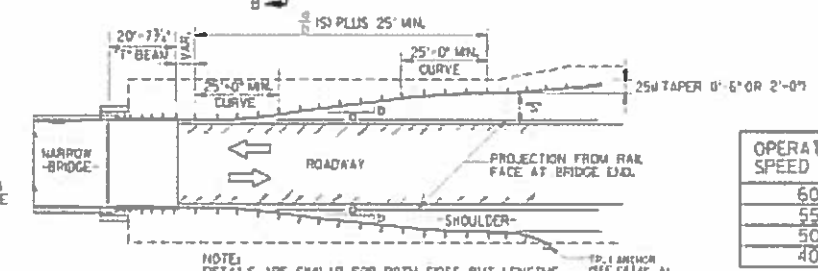

NOTE:
DETAILS ARE SIMILAR FOR BOTH SIDES, BUT LENGTHS AND ANCHORAGE TYPES MAY DIFFER.

GUARDRAIL LOCATION AT END OF NARROW BRIDGE

(NOTE: DETAILS NOT SHOWN HERE ARE SIMILAR TO THOSE AT TOP LEFT.)

OPERATING SPEED (MPH)	FLARE RATE o/b
60	13:1 MIN.
55	12:1 MIN.
50	11:1 MIN.
40	9:1 MIN.

		DATE	DEPARTMENT OF TRANSPORTATION STATE OF GEORGIA
		REVISION	STANDARD GUARDRAIL LOCATION DETAILS FOR UNDIVIDED HIGHWAYS AND ROADS (WITH SHOULDERS ADJACENT TO THE ROADWAY) 31INCH GUARDRAIL HEIGHT
			SCALE AS SHOWN — AUGUST 2011
		DES. GLD DRN. GLD CHK. BAS REVIEW BAS	CURRENT STATE DESIGN POLICY ENGINEER APPROVED CHIEF ENGINEER
			NUMBER 4388

AECOM

REVISION DATES		

DEKALB COUNTY
DEPARTMENT OF TRANSPORTATION

GEORGIA STANDARDS

CONSTITUTION ROAD AND KEY ROAD BRIDGES OVER INTRENCHMENT CREEK

DRAWING NO. 41-011

STATE	PROJECT NUMBER	SHEET NO.	TOTAL SHEETS
GA.			

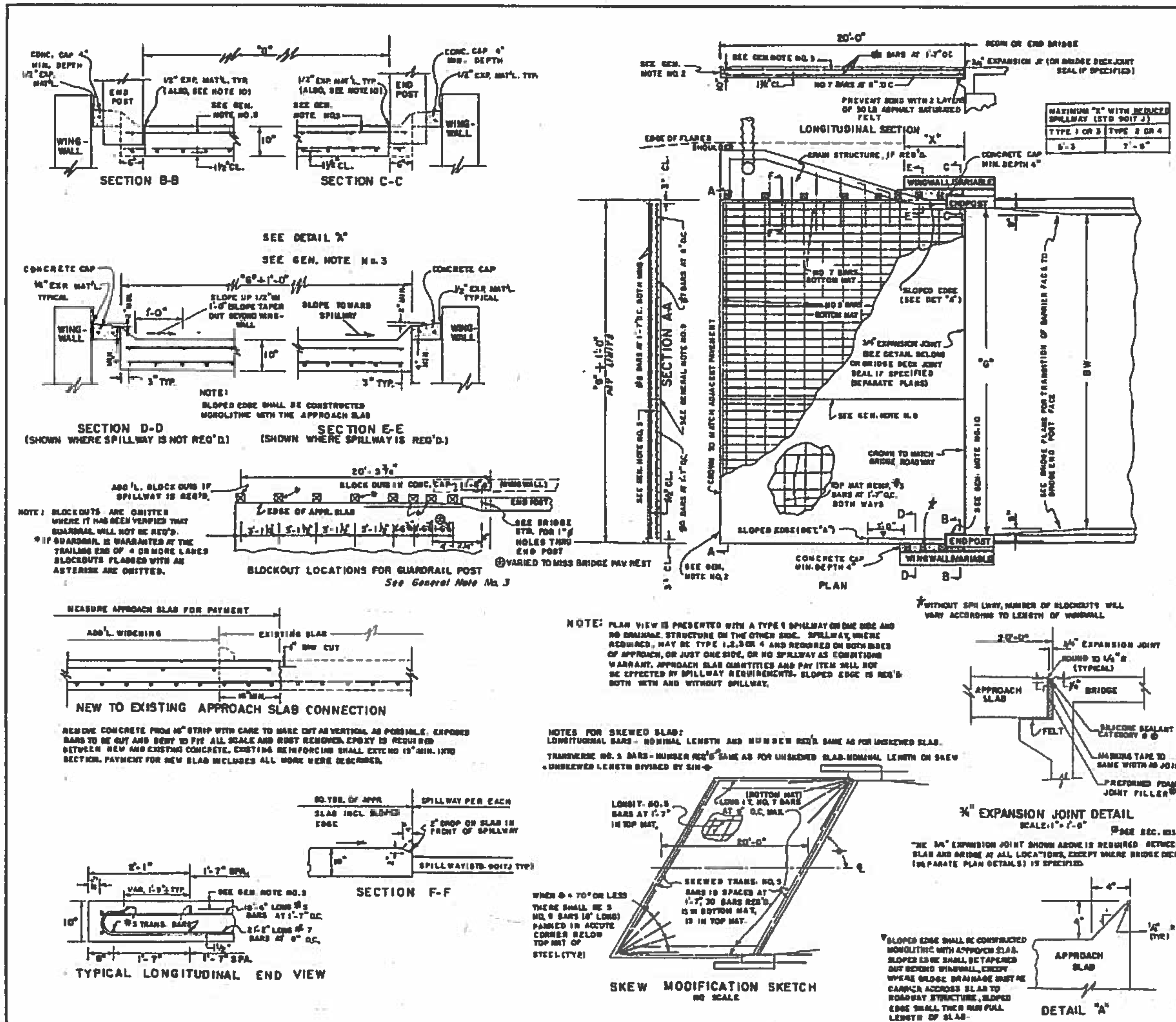

BW	"G" (= BW + 1'-6")	SQ. YDS. OF APPR. SLAB (G + 1') x 20 / 9	BOTTOM MAT REINF. 21-2" LONG #7 LONGIT. BARS NUMBER	BOTTOM MAT REINF. 15 TRANS. #5 BARS LENGTH (= G + 6")	TOP MAT REINF. 19'-6" LONG #5 LONGIT. BARS NUMBER	TOP MAT REINF. 15 TRANS. #5 BARS LENGTH (= G + 6")
26'-0"	29'-6"	67.78	46	30'-0"	20	30'-0"
30'-0"	31'-6"	72.22	49	32'-0"	22	32'-0"
32'-0"	33'-6"	76.67	52	34'-0"	23	34'-0"
34'-0"	35'-6"	81.11	56	36'-0"	24	36'-0"
36'-0"	37'-6"	85.55	58	38'-0"	25	38'-0"
38'-0"	39'-6"	90.00	61	40'-0"	27	40'-0"
40'-0"	41'-6"	94.44	64	42'-0"	28	42'-0"
42'-0"	43'-6"	98.89	67	44'-0"	29	44'-0"
44'-0"	45'-6"	103.33	70	46'-0"	30	46'-0"

QUANTITIES & REINFORCING FOR TYPICAL SLAB SIZES

* DATA IN ABOVE TABLE ARE BASED UPON COMMON SLAB/BRIDGE WIDTHS, WHERE OTHER WIDTHS ARE ENCOUNTERED, THE FORMULAS AT COLUMN TOPS MAY BE USED IN DETERMINING ADDITIONAL DATA NEEDED.

GENERAL NOTES:

1. SPECIFICATIONS: GEORGIA STANDARD, CURRENT EDITION AND SUPPLEMENTS THERETO.
2. WHERE PORTLAND CEMENT CONCRETE PAVEMENT IS TO BE USED FOR ROADWAY PAVING, DOWEL BARS WILL BE INSTALLED IN THE APPROACH SLAB PER STANDARD 3046-N. PAYMENT FOR THE APPROACH SLAB WILL INCLUDE THESE DOWELS, WHEN THE APPROACH SLAB IS CONSTRUCTED BEFORE THE PCC PAVEMENT CONSTRUCTION.
3. THE CONCRETE CAPS ADJACENT TO THE APPROACH SLAB WILL HAVE HOLES APPROXIMATELY 8"Ø BLOCKED OUT FOR GUARDRAIL POST INSTALLATIONS (SEE DETAILS). PAYMENT FOR APPROACH SLAB WILL INCLUDE THE 1/2" EXPANSION MATERIAL AND THE CAPS WITH BLOCKED OUT HOLES.
4. WIDTH OF APPROACH SLAB IS NORMALLY DETERMINED BY DISTANCE BETWEEN FACES OF BRIDGE END POSTS. DETAILS SHOWN ARE BASED UPON THE BRIDGE BARRIER FACE BEING TRANSITIONED 9" TO FACE OF END POST ON EACH SIDE. SEE BRIDGE PLANS. IF BARRIER IS CONTINUED ACROSS APPROACH SLAB INSTEAD, SEE STANDARD 9017-R.
5. COVER OVER TOP MAT OF REINFORCING WILL MATCH THAT OF THE BRIDGE DECK.
6. WHERE APPROACH SLAB IS INTERCEPTED BY THE BRIDGE END POST, EXTERIOR BARS WILL BE SHORTENED AS NEEDED TO GIVE A 3" CLEARANCE TO STRUCTURE.
7. PAY AREA FOR APPROACH SLAB SHALL BE COMPUTED AS A PRODUCT OF THE OVERALL SLAB WIDTH (G + 1') TIMES THE LENGTH (20') WITH NO DEDUCTIONS MADE FOR AREAS OCCUPIED BY THE END POST & EXPANSION JOINTS OR BY DRAINAGE STRUCTURES, AND NO ADDITIONS MADE FOR SIDEWALKS OR OTHER ITEMS WHEN REQUIRED WITH THE APPROACH SLAB.
8. SEE SEPARATE PLAN DETAILS FOR SUBBASE OR OTHER MATERIALS UNDER APPROACH SLAB. IF "CS" CONC. OR P.C. CONC. SUBBASE IS USED, CLEAR POLYETHYLENE SHEETING 6 MILS MIN. THICKNESS, WITH A 6" OVERLAP, UNIFORMALLY LAYED SHALL BE REQUIRED UNDER THE APPROACH SLAB TO PREVENT BONDING. POLYETHYLENE SHEETING SHALL BE NEW, UNUSED AND FREE OF HOLES, RIPS AND TEARS.
9. ALL APPROACH SLABS EXCEEDING 42' IN WIDTH WILL CONTAIN A LONGITUDINAL CONSTRUCTION JOINT. SLABS EXCEEDING 60' AND 90' IN WIDTH SHALL CONTAIN 2 AND 3 LONGITUDINAL CONSTRUCTION JOINTS RESPECTIVELY. SECTIONS BETWEEN JOINTS OR BETWEEN A JOINT AND SLAB EDGE SHALL NOT BE LESS THAN 12' OR MORE THAN 30' WIDE. REINFORCEMENT STEEL REMAINS UNCHANGED AND SHALL EXTEND THRU JOINTS. JOINTS SHALL BE LOCATED AT LANE LINES TO PROVIDE OFFSET FROM WHEELPATHS.
10. IF BRIDGE DECK JOINT SEAL IS USED BETWEEN APPROACH SLAB AND BRIDGE, THE END OF SLAB ADJACENT TO END POST WILL BE SEALED WITH LOW MODULUS SILICONE SEALANT.

NOTE: THIS STANDARD REPLACES STANDARD 9017G.

DEPARTMENT OF TRANSPORTATION
STATE OF GEORGIA

STANDARD
REINFORCED CONCRETE APPROACH SLAB
20 FT LENGTH

TYPICAL USE: WHERE SHOULDER IS ADJACENT TO ROADWAY AND ON ACROSS BRIDGE

SCALE AS SHOWN — JUNE, 1983

SUBMITTED: STATE ROAD & AIRPORT DESIGN ENGR.
APPROVED: STATE HIGHWAY ENGINEER

NUMBER 9017Q

REVISION DATES

DEKALB COUNTY
DEPARTMENT OF TRANSPORTATION
GEORGIA STANDARDS

CONSTITUTION ROAD AND KEY ROAD
BRIDGES OVER INTRENCHMENT CREEK

DRAWING No. 41-012

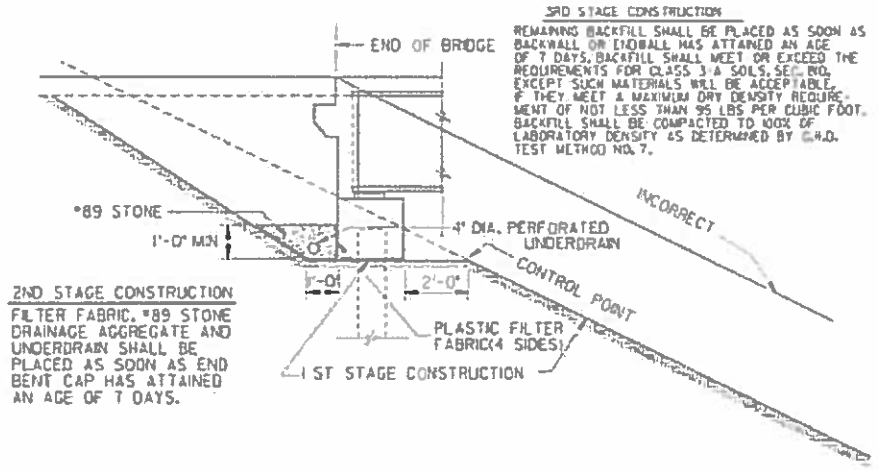

SKETCH SHOWING CONSTRUCTION OF FILLS AT ENDS OF BRIDGES

NO SCALE

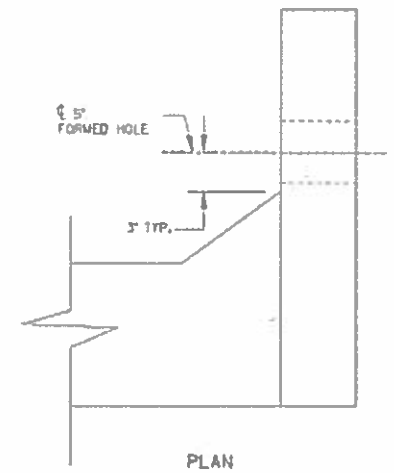

PLAN

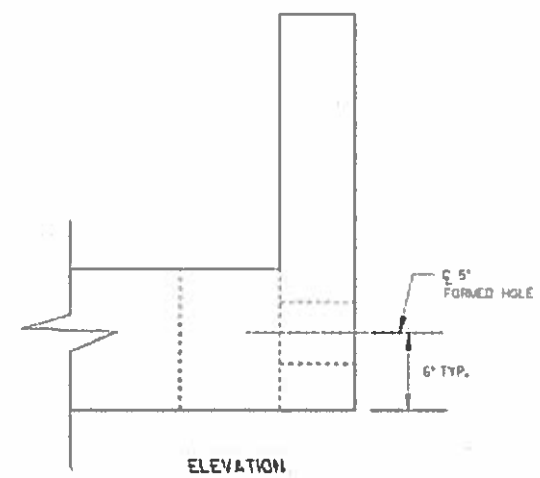

ELEVATION

WINGWALL DETAIL

NOTES:

1. PERFORATED UNDERDRAIN SHALL EXTEND TO THE INSIDE FACE OF WING AT THE HIGH END OF THE CAP.
2. AT THE LOW END OF THE CAP, CONNECT PERFORATED UNDERDRAIN TO A COMPATABLE SOLID PIPE FROM THE INSIDE FACE OF WING UNTIL IT EXITS THE SLOPE. SOLID PIPE SHALL HAVE A MINIMUM SLOPE OF 2%.
3. SOLID PIPE MAY BE PLACED AT EITHER END OF CAPS WITH LEVEL BOTTOM.
4. PERFORATED UNDERDRAIN SHALL BE INSTALLED PARALLEL TO BOTTOM OF CAP. LOW POINTS OR SAGS THAT MAY TRAP WATER WILL NOT BE ALLOWED.
5. FILTER FABRIC SHALL NOT BE ATTACHED TO THE END BENT CAP.
6. COST FOR PROVIDING AND INSTALLING FILTER FABRIC, UNDERDRAIN, AND STONE SHALL BE INCLUDED IN THE PRICE BID FOR CONTRACT ITEMS.

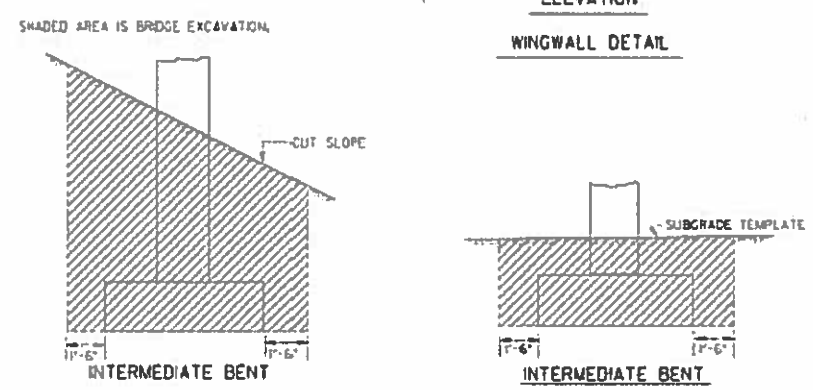

TYPICAL EXCAVATION DETAILS AT BRIDGE BENTS IN CUT SECTIONS

NO SCALE

STATE	PROJECT NUMBER	SHEET NO.	TOTAL SHEETS
GA.			

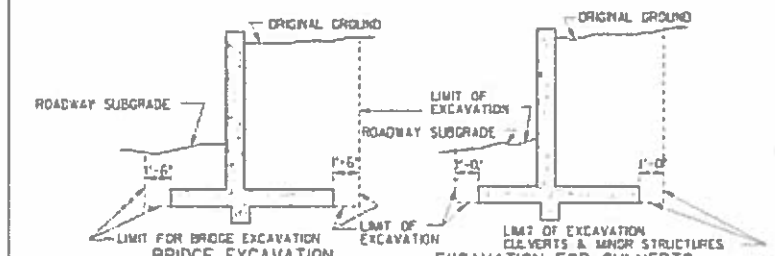

TYPICAL DETAILS OF EXCAVATION AT STRUCTURES

NOTE: WHERE FILL IS PLACED BEFORE CONSTRUCTION OF STRUCTURES THE COST OF EXCAVATION AND BACKFILL ALL BE INCLUDED IN THE COST OF OTHER ITEMS. THERE WILL BE NO PAYMENT FOR EXCAVATION UNDER THIS CONDITION.

DEPARTMENT OF TRANSPORTATION
STATE OF GEORGIA

STANDARD
TYPICAL FILL DETAIL AT END OF BRIDGE

NO SCALE — REDRAWN SEPT., 1999

DES. / DFTL. / TRA. / CHK. — SUBMITTED: STATE BRIDGE & ARCH. DESIGN ENGR. — APPROVED: CHIEF ENGINEER

NUMBER 9037

REVISION DATES

AECOM

DEKALB COUNTY
DEPARTMENT OF TRANSPORTATION

GEORGIA STANDARDS

CONSTITUTION ROAD AND KEY ROAD BRIDGES OVER INTRENCHMENT CREEK

DRAWING No. 41-013

COUNTY	PROJECT NUMBER	SHEET NO.	TOTAL SHEETS
DEKALB	0012613		73

STATE	PROJECT NUMBER	SHEET NO.	TOTAL SHEETS
GA.			

TEMPORARY RAISED PAVEMENT MARKER DETAIL

INSTALLATION PATTERN FOR LATERAL MARKING SHIFTS AND CROSSOVER OPERATIONS. ALSO APPLICABLE FOR DETOURS (AND BY-PASSES).

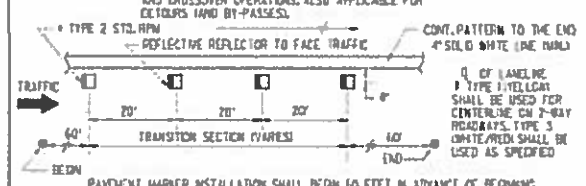

PAVEMENT MARKER INSTALLATION SHALL BEGIN 60 FEET IN ADVANCE OF BEGINNING OF THE SHIFT OR TRANSITION ALIGNMENT, CONTINUE THRU THE TRANSITION AREA, & EXTEND 60 FEET BEYOND THE INTERSECTION WITH THE TEMPORARY ALIGNMENT. TEMPORARY RAISED PAVEMENT MARKERS SHALL BE INSTALLED IN ACCORDANCE WITH THE MANUFACTURERS RECOMMENDATIONS AND THE GA. STD. SPECIFICATIONS.

STANDARD LEGEND

- STRIPED DRUM
- TYPE III BARRICADES
- SPECIAL BARRICADE WITH BI-DIRECTIONAL TYPE "C" STEADY BURNING LIGHT OR HIGHWAY SIGN AS SPECIFIED (SEE DETAIL)
- SEQUENTIAL OR FLASHING ARROW
- PORTABLE CHANGEABLE MESSAGE SIGN
- PERMANENT TYPE POST MOUNTED SIGN
- TEMPORARY POST MOUNTED SIGN
- PORTABLE MOUNTED SIGN - FLAGS NOT REQUIRED
- WORK AREA
- TRAFFIC CONE - 28" MIN. - DAYTIME USE ONLY!
- FLAGGER WITH STOP/SLOW PADDLE
- TRAFFIC IMPACT ATTENUATOR (CRASH CUSHION)
- TYPE I CLEAR (WHITE) DELINEATOR - SINGLE FACE
- TYPE I YELLOW DELINEATOR - SINGLE FACE
- TYPE I CLEAR (WHITE) DELINEATOR DOUBLE FACE
- TYPE I YELLOW DELINEATOR DOUBLE FACE

GENERAL NOTES :

1. ALL TRAFFIC CONTROL DEVICES SHALL BE MADE AND ERECTED IN ACCORDANCE WITH THE DETAILS SHOWN ON THE PLANS, THE MUTCD, THE GEORGIA STANDARD SPECIFICATIONS, AND/OR SPECIAL PROVISIONS (SEE SECTION 150).

2. ALL TRAFFIC CONTROL DEVICES SHALL BE AS SHOWN OR AS DIRECTED BY THE ENGINEER. ADDITIONAL DEVICES MAY BE REQUIRED AS DIRECTED BY THE ENGINEER.

3. ALL PORTABLE SIGNS SHALL BE MOUNTED A MINIMUM OF 1 FOOT ABOVE THE LEVEL OF PAVEMENT EDGE FOR DIRECTIONAL TRAFFIC OF TWO (2) LANES OR LESS AND A MINIMUM OF 7 FEET FOR DIRECTIONAL OF THREE (3) OR MORE LANES. ALL PORTABLE SIGNS AND SIGN MOUNTING DEVICES UTILIZED IN THE WORK SHALL BE NCHRP 350 COMPLIANT. PORTABLE SIGNS MAY BE USED WHEN THE DURATION OF THE WORK IS LESS THAN 3 DAYS.

4. WHEN THE CONSTRUCTION AREA HAS ENTRANCE/EXIT RAMPS OR INTERSECTIONS, WORK WILL BE PERFORMED IN SUCH A MANNER TO PERMIT TRAFFIC TO OPERATE WITH THE LEAST AMOUNT OF INCONVENIENCE AS POSSIBLE. ADDITIONAL CHANNELIZATION AND SIGNING SHALL BE INSTALLED, AS REQUIRED, TO ALLOW TRAFFIC TO REMAIN AS OPERATIONAL AS POSSIBLE. WHEN ENTRANCE RAMPS/INTERSECTIONS ARE INOPERABLE, FLAGGERS ALL BE UTILIZED TO CONTROL AND PROHIBIT MOVEMENT INTO THE PROJECT AT THAT POINT UNTIL CONSTRUCTION HAS CLEARED THE RESTRICTION SUFFICIENT TO RETURN TO OPERATIONAL STATUS.

5. FOR NIGHT TIME OPERATIONS, DRUMS SHALL HAVE, FOR THE LENGTH OF THE TAPER ONLY, A SIX (6) INCH ORANGE REFLECTIVE TOP STRIPE ON EACH DRUM IN THE TAPER AS REQUIRED IN SECTION 150. SPACING OF DEVICES SHALL BE AS SHOWN. DURING DAYLIGHT HOURS, CONES (28" MIN.) MAY BE USED IN ADVANCE OF AND THROUGHOUT WORK AREA.

6. SIGN LOCATIONS ARE APPROXIMATE AND MAY BE ADJUSTED TO MEET FIELD CONDITIONS BUT MUST BE WITHIN THE LIMITATIONS SET FORTH IN THE MUTCD.

7. A PORTABLE SELF-SUSTAINED SEQUENTIAL OR FLASHING ARROW SIGN SHALL BE USED AT THE BEGINNING OF EACH LANE CLOSURE ON MULTI-LANE HIGHWAYS. ARROW PANELS SHALL NOT BE USED ON TWO-LANE TWO-WAY HIGHWAYS EXCEPT IN CAUTION MODE.

8. WHEN NOT IN USE, PORTABLE SIGNS SHALL BE REMOVED FROM THE TRAVELWAY SO THAT THE MESSAGE IS NOT VISIBLE TO THE MOTORIST. INTERIM SIGNS THAT ARE PERMANENTLY MOUNTED SHALL BE COVERED WHEN NOT APPLICABLE. SEE SECTION 150.

9. PROJECT SIGNS W20-1, G20-1 & G20-2 FOR THIS PROJECT SHALL BE COORDINATED WITH ADJACENT CONSTRUCTION PROJECTS. ONLY ONE SET OF SIGNS IS REQUIRED IN EACH DIRECTION FOR THE TOTAL LENGTH OF ALL PROJECTS- AT THE BEGINNING OF THE FIRST PROJECT AND AT THE ENDING OF THE LAST PROJECT. ADVANCE CONSTRUCTION SIGNS ARE NOT REQUIRED ON INTERMEDIATE PROJECTS, UNLESS CONSTRUCTION ON THE ADJACENT PROJECTS IS COMPLETED BEFOREHAND. THEN PROJECT CONSTRUCTION SIGNS WILL BE ADDED AS NECESSARY.

10. ALL THE COST OF THE MATERIALS, LABOR AND EQUIPMENT NECESSARY TO COMPLETE THE WORK SHALL BE INCLUDED IN THE PRICE BID FOR TRAFFIC CONTROL, SECTION 150, LUMP SUM, WHEN SHOWN AS A PAYMENT ITEM IN THE PROPOSAL. OTHERWISE, ALL THE COST WILL BE INCLUDED IN THE OVER-ALL BID SUBMITTED. EXCEPT ON CERTAIN PROJECTS SOME ITEMS MAY BE PAID FOR SEPARATELY BY THE UNIT WHEN SPECIFIED ON THE PLANS AND IN THE PROPOSAL.

11. FOR FREEWAY CONSTRUCTION THE CONTRACTOR SHALL ARRANGE HIS WORK SO THAT THERE IS AN EXIT GORE SIGN AND AN EXIT DIRECTION SIGN IN PLACE FOR ALL EXIT RAMPS AT ALL TIMES.

12. ALL CROSSROADS, SIDEROADS, RAMPS OR OTHER ENTRANCES TO MAINLINE CONSTRUCTION SHALL REQUIRE W20-1 SIGNS LOCATED AS SHOWN IN THE PLANS, OR AS DIRECTED BY THE ENGINEER.

13. MARKINGS AND/OR SIGNS IN CONFLICT WITH INTERIM TRAFFIC CONTROL SHALL BE REMOVED, RELOCATED OR COVERED. APPLICABLE EXISTING AND INTERIM MARKINGS AND/OR SIGNING SHALL BE MAINTAINED PER SECTION 150.

14. ANY CHANNELIZING DEVICES (DRUMS OR BARRICADES) IN CONFLICT WITH CONCRETE BARRIERS SHALL BE OMITTED.

15. CONTRACTOR SHALL PROVIDE THE NECESSARY TRAFFIC CONTROL DURING THE TIE-IN OPERATION.

16. THE TRAFFIC CONTROL DEVICES SHOWN FOR ANY STAGE CONSTRUCTION SHALL REMAIN IN PLACE AND BE UTILIZED SO LONG AS NECESSARY FOR THE FOLLOWING STAGES AND SHALL BE REMOVED IMMEDIATELY WHEN NO LONGER REQUIRED. THE DEVICES MAY OR MAY NOT BE SHOWN ON THE PLANS FOR THESE FOLLOWING STAGES. REFER TO THE PLAN SHEET FOR THE INITIAL STAGE FOR THESE TRAFFIC CONTROLS.

17. EXISTING GUIDE SIGNS SHALL REMAIN IN PLACE SO LONG AS THEY DO NOT CONFLICT WITH THE CONSTRUCTION OF THIS PROJECT. WHEN IN CONFLICT, THEY SHALL BE RELOCATED ON TEMPORARY POSTS AT THE LOCATION AS DIRECTED BY THE ENGINEER. ANY DISTANCE SHOWN ON THE SIGN SHALL BE ADJUSTED ACCORDINGLY. IF THE SIGNS CANNOT BE RELOCATED, THEN THE SIGN SHALL BE REMOVED AND STORED AT A PLACE DESIGNATED BY THE ENGINEER. IF NEITHER OF THE ABOVE CAN BE DONE, THEN THE CONTRACTOR SHALL PROVIDE INTERIM GUIDE SIGNS AS COVERED IN SECTION 150.

18. (a) ON PROJECTS WITH LOW OR SOFT SHOULDERS, THE CONTRACTOR SHALL ERECT IMMEDIATELY AHEAD OF CONSTRUCTION OPERATIONS "LOW/SOFT SHOULDER" WARNING SIGNS AT THE PROJECT TERMINII, AT INTERVALS NOT TO EXCEED 1 MILE AND IMMEDIATELY PAST EACH CROSSROAD.

    (b) WHERE THE CONTRACTOR IS NOT RESPONSIBLE FOR SHOULDER CONSTRUCTION, THE DEPARTMENT WILL FURNISH THESE SIGNS FOR THE CONTRACTOR TO PICK UP, TRANSPORT, AND ERECT. THE DEPARTMENT WILL LATER REMOVE AND RETAIN THE SIGNS.

DATE	REVISION	BY
4-21-06	REVISED GENERAL NOTES AND LEGEND, DELETED TWO DETAILS, SHT. BAR, SH. SPEC.	

DEPARTMENT OF TRANSPORTATION
STATE OF GEORGIA

STANDARD
TRAFFIC CONTROL
GENERAL NOTES, STANDARD LEGEND, MISCELLANEOUS DETAILS

NO SCALE — AUG., 1999

CES. — DRN. — TRA. — CHK. —
SUBMITTED — STATE ROAD & AIRPORT DESIGN ENGINEER
APPROVED — CHIEF ENGINEER

NUMBER 9100

AECOM

REVISION DATES		

DEKALB COUNTY
DEPARTMENT OF TRANSPORTATION

GEORGIA STANDARDS

CONSTITUTION ROAD AND KEY ROAD
BRIDGES OVER INTRENCHMENT CREEK

DRAWING NO. 41-014

12/16/2015 7:12:44 AM brayl	gptatborder-V81-PO.tbl	07-9001177B-copy.dgn	COUNTY	PROJECT NUMBER	SHEET NO.	TOTAL SHEETS
			DEKALB	0012613		73

STATE	PROJECT NUMBER	SHEET NO.	TOTAL SHEETS
GA.			

GENERAL NOTES:

1. ALL TRAFFIC CONTROL DEVICES SHALL BE MADE AND ERECTED IN ACCORDANCE WITH THE DETAILS SHOWN ON THE PLANS, THE MUTCD, THE GEORGIA STANDARD SPECIFICATIONS, AND/OR SPECIAL PROVISIONS. (SEE SECTION 150)
2. ALL TRAFFIC CONTROL DEVICES SHALL BE AS SHOWN, OR AS DIRECTED BY THE ENGINEER. ADDITIONAL DEVICES MAY BE REQUIRED AS DIRECTED BY THE ENGINEER.
3. ALL PORTABLE SIGNS SHALL BE MOUNTED A MINIMUM OF 1FOOT ABOVE THE LEVEL OF PAVEMENT EDGE FOR DIRECTIONAL TRAFFIC OF TWO (2) LANES OR LESS AND A MINIMUM OF 7 FEET FOR DIRECTIONAL OF THREE (3) OR MORE LANES. ALL PORTABLE SIGNS AND SIGN MOUNTING DEVICES UTILIZED IN THE WORK SHALL BE NCHRP 350 COMPLIANT. PORTABLE SIGNS MAY BE USED WHEN THE DURATION OF THE WORK IS LESS THAN 3 DAYS.
4. WHEN THE CONSTRUCTION AREA HAS ENTRANCE/EXIT RAMPS OR INTERSECTIONS, WORK ALL BE PERFORMED IN SUCH A MANNER TO PERMIT TRAFFIC TO OPERATE WITH THE LEAST AMOUNT OF INCONVENIENCE AS POSSIBLE. ADDITIONAL CHANNELIZATION AND SIGNAGE SHALL BE INSTALLED, AS REQUIRED, TO ALLOW TRAFFIC TO REMAIN AS OPERATIONAL AS POSSIBLE. WHEN ENTRANCE RAMPS/INTERSECTIONS ARE INOPERABLE, FLAGGERS WILL BE UTILIZED TO CONTROL AND PROHIBIT MOVEMENT INTO THE PROJECT AT THAT POINT UNTIL CONSTRUCTION HAS CLEARED THE RESTRICTION SUFFICIENT TO RETURN TO OPERATIONAL STATUS.
5. FOR NIGHT TIME OPERATIONS, DRUMS SHALL HAVE, FOR THE LENGTH OF THE TAPER ONLY, A SIX (6) INCH ORANGE REFLECTIZED TOP STRIPE ON EACH DRUM IN THE TAPER AS REQUIRED IN SECTION 150. SPACING OF DEVICES SHALL BE AS SHOWN. DURING DAYLIGHT HOURS, CONES (28" MIN) MAY BE USED IN ADVANCE OF AND THROUGHOUT WORK AREA.
6. SIGNS SHOWN HERE ARE IN ADDITION TO ALL ADVANCE WARNING SIGNS REQUIRED IN SECTION 150.
7. FLAGGERS SHALL BE PROVIDED AS NECESSARY TO PROHIBIT WRONG DIRECTION OF TRAFFIC THRU WORK AREAS.
8. WHEN NOT IN USE, PORTABLE SIGNS SHALL BE REMOVED FROM THE TRAVELWAY SO THAT THE MESSAGE IS NOT VISIBLE TO THE MOTORIST. INTERIM SIGNS THAT ARE PERMANENT MOUNTED SHALL BE COVERED WHEN NOT APPLICABLE. SEE SECTION 150.
9. PAYMENT FOR TRAFFIC CONTROL SHALL BE PER SECTION 150.
10. PAVEMENT MARKINGS FOR TEMPORARY TRAFFIC CONTROL, IF REQUIRED, SHALL BE IN ACCORDANCE WITH SECTION 150 AND AS DIRECTED BY THE ENGINEER OR SHOWN IN THE PLANS.
11. (a) ON PROJECTS WITH LOW OR SOFT SHOULDERS, THE CONTRACTOR SHALL ERECT IMMEDIATELY AHEAD OF CONSTRUCTION OPERATIONS "LOW/SOFT SHOULDER" WARNING SIGNS AT THE PROJECT TERMINI, AT INTERVALS NOT TO EXCEED ONE MILE AND IMMEDIATELY PAST EACH CROSSROAD.

    (b) WHERE THE CONTRACTOR IS NOT RESPONSIBLE FOR SHOULDER CONSTRUCTION THE DEPARTMENT WILL FURNISH THESE SIGNS FOR THE CONTRACTOR TO PICK-UP, TRANSPORT AND ERECT. THE DEPARTMENT WILL LATER REMOVE AND RETAIN THE SIGNS.
12. HIGHWAY WORK ZONE SIGNS (HWZ-2 AND HWZ-3) SHALL BE INSTALLED ON THE TRAVEL WAY AND THE INTERSECTING ROADWAY AS REQUIRED IN SECTION 150.

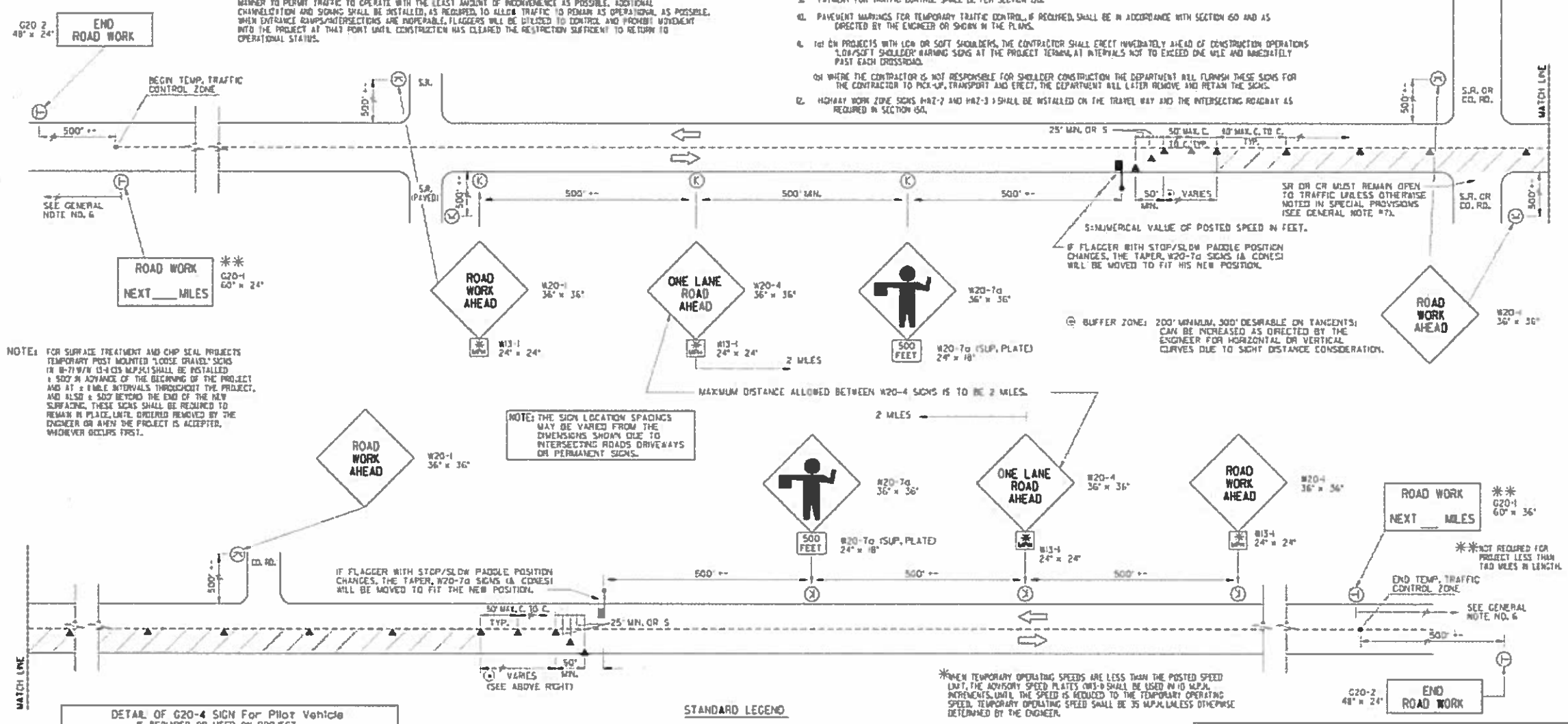

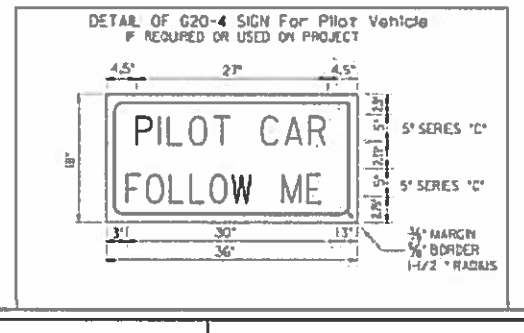

STANDARD LEGEND

- STRIPED DRUM
- PERMANENT TYPE POST MOUNTED SIGN (7' MOUNT HEIGHT)
- TEMPORARY POST MOUNTED SIGN - (7' MOUNT HEIGHT)
- PORTABLE MOUNTED SIGN - MINIMUM HEIGHT OF 1FT. ABOVE THE EDGE OF PAVEMENT; INSTALLED AS PER NCHRP 350 TESTING REQUIREMENTS.
- WORK AREA
- TRAFFIC CONE - 28" MIN. - DAYTIME USE ONLY
- FLAGGER WITH STOP/SLOW PADDLE

NO.	DATE	REVISION	BY
1	1-30-06	REMOVED FLAGS AND REV. GENERAL NOTES, REV. SIGN 290-23 TO CR-2.	

DEPARTMENT OF TRANSPORTATION
STATE OF GEORGIA

STANDARD TRAFFIC CONTROL DETAIL FOR LANE CLOSURE ON TWO-LANE HIGHWAY

NO SCALE — REV. & REDR. JULY, 1999

DES. ___ DRA. ___ TRA. ___ CHK. ___

SUBMITTED: STATE ROAD & AIRPORT DESIGN ENGINEER

APPROVED: STATE ENGINEER

NUMBER 9102

AECOM

REVISION DATES		

DEKALB COUNTY
DEPARTMENT OF TRANSPORTATION

GEORGIA STANDARDS

CONSTITUTION ROAD AND KEY ROAD BRIDGES OVER INTRENCHMENT CREEK

DRAWING NO. 41-015

1/21/2016 8:03:31 AM
USER:Emily.Duvan
gplotborder-V81-PO-utilities-black.tbl
P:\Projects_Legacy\ATL-P_Drive\1528\60427168 Dekalb County\900-CAD-GIS\910 CAD_BIM\912 - WA02 KC\DGN\RDY\07-900717-44-01.dgn

COUNTY	PROJECT NUMBER	SHEET NO.	TOTAL SHEETS
DEKALB	0012613	14	73

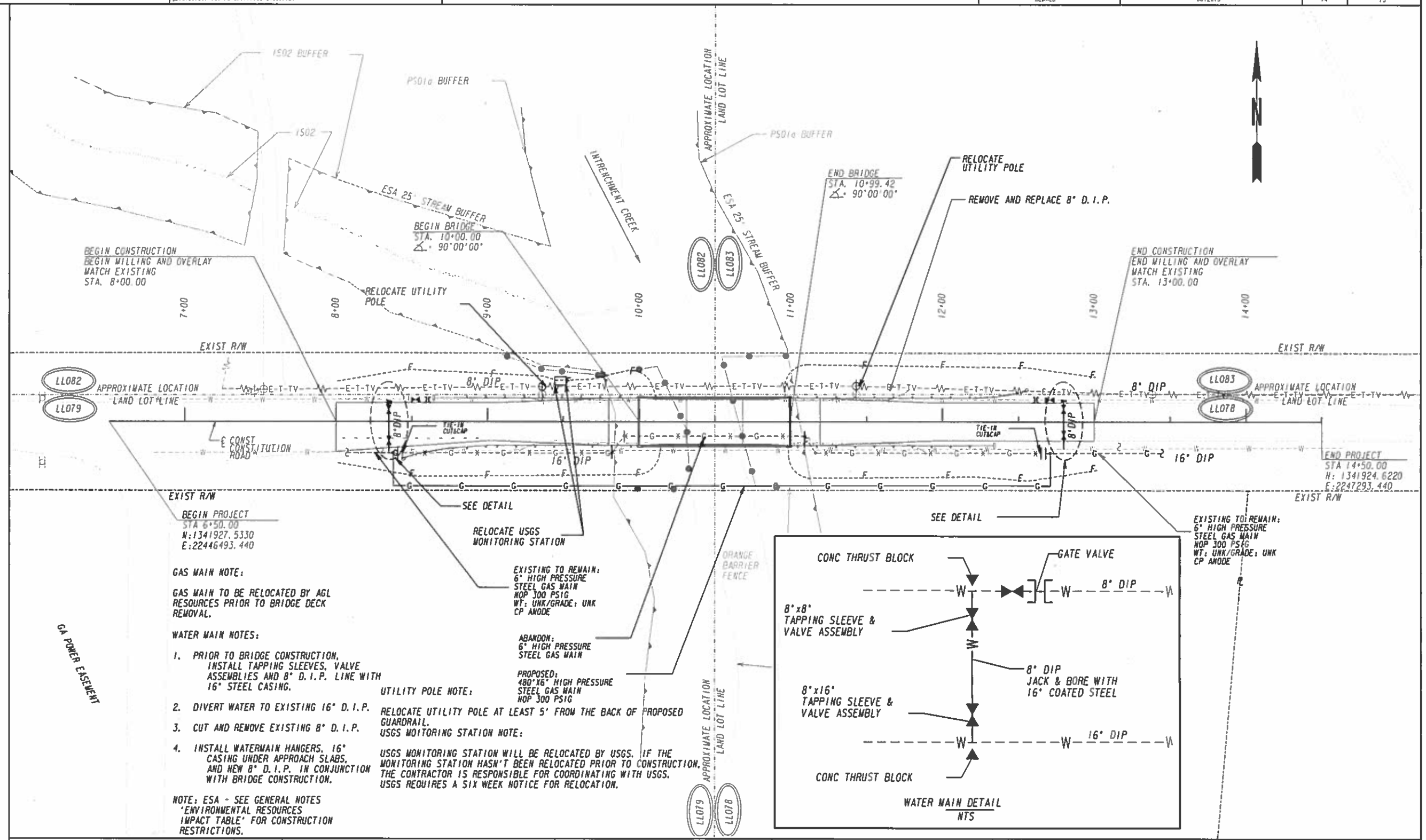

GAS MAIN NOTE:

GAS MAIN TO BE RELOCATED BY AGL RESOURCES PRIOR TO BRIDGE DECK REMOVAL.

WATER MAIN NOTES:

1. PRIOR TO BRIDGE CONSTRUCTION, INSTALL TAPPING SLEEVES, VALVE ASSEMBLIES AND 8" D.I.P. LINE WITH 16" STEEL CASING.
2. DIVERT WATER TO EXISTING 16" D.I.P.
3. CUT AND REMOVE EXISTING 8" D.I.P.
4. INSTALL WATERMAIN HANGERS, 16" CASING UNDER APPROACH SLABS, AND NEW 8" D.I.P. IN CONJUNCTION WITH BRIDGE CONSTRUCTION.

NOTE: ESA - SEE GENERAL NOTES 'ENVIRONMENTAL RESOURCES IMPACT TABLE' FOR CONSTRUCTION RESTRICTIONS.

UTILITY POLE NOTE:

RELOCATE UTILITY POLE AT LEAST 5' FROM THE BACK OF PROPOSED GUARDRAIL.

USGS MOITORING STATION NOTE:

USGS MONITORING STATION WILL BE RELOCATED BY USGS. IF THE MONITORING STATION HASN'T BEEN RELOCATED PRIOR TO CONSTRUCTION, THE CONTRACTOR IS RESPONSIBLE FOR COORDINATING WITH USGS. USGS REQUIRES A SIX WEEK NOTICE FOR RELOCATION.

PROPERTY AND EXISTING R/W LINE	BEGIN LIMIT OF ACCESS.....BLA
REQUIRED R/W LINE	END LIMIT OF ACCESS.....ELA
CONSTRUCTION LIMITS	LIMIT OF ACCESS
EASEMENT FOR CONSTR & MAINTENANCE OF SLOPES	R/W AND LIMIT OF ACCESS
EASEMENT FOR CONSTR OF SLOPES	EXISTING R/W LINE
EASEMENT FOR CONSTR OF DRIVES	ORANGE BARRIER FENCE

AECOM

SCALE IN FEET
0 30 60 120

REVISION DATES

DEKALB COUNTY
DEPARTMENT OF TRANSPORTATION

UTILITY RELOCATION PLAN

CONSTITUTION ROAD
BRIDGE OVER INTRENCHMENT CREEK

DRAWING No. 44-001

ESPCP GENERAL NOTES:

The escape of sediment from the site shall be prevented by the installation of erosion and sediment control measures and practices prior to, or concurrent with, land disturbing activities.

Erosion control measures will be maintained at all times. If full implementation of the approved plan does not provide for effective erosion control, additional erosion and sediment control measures shall be implemented to control or treat the sediment source.

TEMPORARY MULCHING

"Any disturbed area left exposed for a period greater than 14 days shall be stabilized with mulch or temporary seeding." - However, the Department typically requires disturbed areas to be stabilized every 7 days. The construction documents, special provisions, or Specification may require mulching more often than 7 days.

VEGETATION AND PLANTING SCHEDULE

All temporary and permanent vegetative practices including plant species, planting dates, seeding fertilizing, liming and mulching for this project can be found in section 700 of the current edition of the Dept's Std Specifications (or special provisions) and other applicable contract documents or landscaping plans.

POST-CONSTRUCTION BMP'S FOR STORMWATER MANAGEMENT

All permanent, post-construction BMP's are shown in the construction plans and in the ESPCP plan. The post-construction BMP's for this project may consist of permanent vegetation, permanent slope drains and/or flumes, rip-rap at pipe outlets for velocity dissipation and outlet stabilization, vegetated swales/ditches where practical, channels/ditch stabilization with Turf Reinforcing Mats, rip-rap, and concrete ditch lining where necessary. The post-construction BMP's will provide permanent stabilization of the site and prevent accelerated transportation of sediment and pollutants into receiving waters.

SILT FENCE INSTALLATIONS WITH J-HOOKS AND SPURS

Silt fence should never be run continuously. The silt fence should turn back into the fill or slope to create small pockets that trap silt and force stormwater to flow through the silt fence. This technique is called using J-Hooks (or spurs). The J-Hooks shall be utilized on all silt fences that are located around the perimeter of the project and along the toe of embankments or slopes. The J-Hooks shall be spaced in accordance with GDOT Construction Detail D-24C. The maximum J-Hook spacing is reached when the top of the J-Hook is at the same elevation as the bottom of the immediately upgradient J-Hook. J-Hooks shall be paid for as silt fence items per linear foot. All costs and other incidental items are included in cost of installing and maintaining the silt fence.

SITE STABILIZATION AND BMP MAINTENANCE MEASURES

See the Dept's Std Specifications (or special provisions) 161, 163, 165, 700, 710, and other contract documents for stabilization and maintenance measures.

WASTE DISPOSAL

Where attainable, locate waste collection areas, dumpsters, trash cans and portable toilets at least 50 feet from streets, gutters watercourses and storm drains. Secondary containment shall be provided around liquid waste collection areas to minimize the likelihood of contaminated discharges. The Contractor shall comply with the applicable state and local waste storage and disposal regulations and obtain the necessary permits. Solid materials, including building materials, shall not be discharged to Waters of the State, unless authorized by Section 404 Permit.

READY MIX CHUTE WASH DOWN

The washing of ready-mix concrete drums and dump truck bodies used in the delivery of portland cement concrete is prohibited on this site. In accordance with Standard Specification 107: Legal Regulations and Responsibility to the Public, only the discharge chute utilized in the delivery of Portland cement concrete may be rinsed free of fresh concrete remains. The Contractor shall excavate a pit outside of State water buffers, at least 25 feet from any storm drain and outside of the travelled way, including shoulders, for a wash-down pit area. The pit shall be large enough to store all wash-down water without overtopping. Immediately after the wash-down operations are completed and after the wash-down water has soaked into the ground, the pit shall be filled in, and the ground above shall be graded to match the elevation of the surrounding areas. Alternate wash-down plans must be approved by the Project Engineer.

Wash-down plans describe procedures that prevent wash-down water from entering streams and rivers. Never dispose of wash-down water down a storm drain. Establish a wash-down water pit location that includes the following: (1) a location away from any storm drain, stream or river, (2) access to the vehicle being used for wash-down, (3) sufficient volume for wash-down water, and (4) permission to use the area for wash-down.

On sites where permission or access to excavate a wash-down pit is unavailable, the Contractor may have to wash-down into a sealable 55-gallon drum or other suitable container and then transport the container to a proper disposal site. For additional information, refer to the Georgia Small Business Environmental Assistance Program's "A Guide For Ready Mix Chute/Hopper Wash-down".

CONSTRUCTION EXITS

This project budget includes sufficient funds for the payment of construction exit(s). The contractor is responsible for establising at least two (2) construction exit(s) per each site per the specification of the construction exit detail included in this ESPCP. To facilitate the project logistics, the contractor is also responsible for selection the location(s) of the construction exit(s).

AECOM

REVISION DATES		

DEKALB COUNTY
DEPARTMENT OF TRANSPORTATION

BMP GENERAL NOTES

CONSTITUTION ROAD AND KEY ROAD
BRIDGES OVER INTRENCHMENT CREEK

DRAWING No. 51-001

GPLH

STATE	PROJECT NUMBER	SHEET NO.	TOTAL SHEETS
GA.			

	CODE	PRACTICE STD :SPC's :SECTION	DETAIL	DESCRIPTION
	Bf	BUFFER ZONE SYMBOL Bf	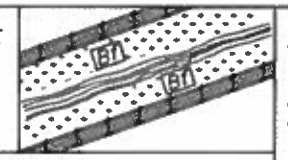	A STRIP OF UNDISTURBED ORIGINAL VEGETATION. ENHANCED OR RESTORED EXISTING VEGETATION. OR THE RE-ESTABLISHMENT OF VEGETATION SURROUNDING AN AREA OF DISTURBANCE OR BORDERING STREAMS. PONDS. WETLANDS. LAKES. AND COASTAL WATERS. THE BOUNDARIES OF THESE AREAS ARE BE DELINEATED BY ORANGE BARRIER FENCE.
	ESA	ENVIRONMENTALLY SENSITIVE AREA LINE CODE ESA-25'(OR 50')STREAM BUFFER, ETC.	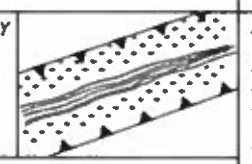	ENVIRONMENTALLY SENSITIVE AREA (ESA) CONTAINS RESOURCES THAT ARE ENVIRONMENTALLY. CULTURALLY. OR HISTORICALLY SENSITIVE. ESA AREAS INCLUDE. BUT ARE NOT LIMITED TO: STATE WATER BUFFERS. ARCHAEOLOGICAL SITES. HISTORIC SITES. AND PROTECTED ANIMAL AND PLANT SPECIES HABITATS. IF WORK IS AUTHORIZED IN THIS AREA. THE WORK MUST BE PERFORMED IN ACCORDANCE WITH SECTION 107 AND ANY OTHER APPLICABLE SPECIAL PROVISIONS AND APPLICABLE PLAN NOTES.
		ORANGE BARRIER FENCE LINE CODE ORANGE BARRIER FENCE	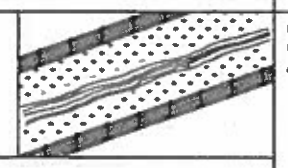	ORANGE BARRIER FENCE DELINEATES ESA AREAS WHERE THE CONTRACTOR SHALL NOT CLEAR. GRUB. PLACE CONSTRUCTION MATERIALS OR EQUIPMENT WITHIN THIS AREA.
	Cd-F	FABRIC CHECK DAM CONSTRUCTION DETAIL SECTION 171 LINE CODE Cd-F	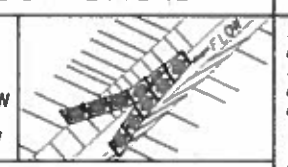	A CHECK DAM COMPOSED OF SYNTHETIC FIBER FABRIC. WIRE REINFORCED. POST. AND BRACING PLACED IN DITCHES IN A SPECIAL CONFIGURATION WHICH CONTROLS ENERGY DISSIPATION AND FILTRATION OF STORM WATER. SEE CONSTRUCTION DETAIL D-24b FOR SPACING REQUIREMENT. THIS ITEM IS SUITABLE FOR USE IN ROADSIDE DITCHES THAT ARE PART OF INFRASTRUCTURE CONSTRUCTION PROJECTS. IF THIS ITEM IS USED IN AN AREA WITHOUT A SEDIMENT BASIN CONSIDERATION SHOULD BE GIVEN TO USING TWO OR MORE ROCK FILTER DAMS NEAR THE DISCHARGE POINT.
	Cd-S	STONE OR SANDBAG CHECK DAM SECTION 163. 603 LINE CODE Cd-S	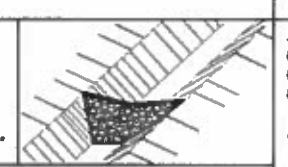	STONE CHECK DAMS ARE USED IN ROADWAY DITCHES. GEOTEXITLE UNDERLINER SHALL BE USED WHEN PLACING STONE CHECK DAMS. CONTRACTOR MAY USE SANDBAG CHECK DAMS IN LIEU OF STONE CHECK DAMS. SANDBAG CHECK DAMS MUST BE USED IN CONCRETE LINED CHANNELS.

NOTE:
1. DO NOT USE EROSION CONTROL ITEMS IN A FLOWING STREAM OR IN A TIDAL AREA BELOW HIGH TIDE.
2. FOR ADDITIONAL INFORMATION ON THE DESIGN AND APPLICATION OF EROSION CONTROL MEASURES SEE THE GEORGIA SOIL AND WATER CONSERVATION COMMISSION. "MANUAL FOR EROSION AND SEDIMENT CONTROL IN GEORGIA".

	CODE	PRACTICE STD :SPC's :SECTION	DETAIL	DESCRIPTION
	Ch-C	CHANNEL CONCRETE SECTION 161. 441 Ch-C	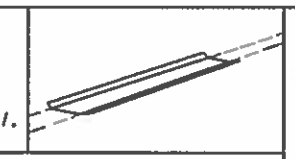	THIS ITEM CONSISTS OF CONSTRUCTING A 4" THICK CONCRETE CHANNEL. THE CONCRETE SHALL PROTECT THE DITCH FLOWING TO A DEPTH "Dp" RECOMMENDED BY THE GDOT DITCH PROTECTION PROGRAM "Dp" SHALL BE IDENTIFIED IN A TABLE LOCATED ON THE SUMMARY OF QUANTITIES SHEETS
	Ch-Rp1	CHANNEL RIP RAP TYPE 1 SECTION 161. 603 LINE CODE Ch-Rp1	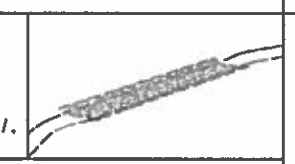	THIS ITEM CONSISTS OF LINING A CHANNEL WITH TYPE 1 RIP RAP 24" THICK (UNLESS SPECIFIED OTHERWISE) PLACED ON TOP OF A GEOTEXTILE UNDERLINER. THE RIP RAP SHALL PROTECT THE DITCH FLOWING TO A DEPTH "Dp" RECOMMENDED BY THE GDOT DITCH PROTECTION PROGRAM. ADDITIONAL EROSION CONTROL MEASURES MAY BE REQUIRED ALONG THIS CHANNEL SUCH AS Sdi-C. Rdc OR Sg. "Dp" SHALL BE IDENTIFIED IN A TABLE LOCATED ON THE SUMMARY OF QUANTITIES SHEETS
	Ch-Rp3	CHANNEL RIP RAP TYPE 3 SECTION 161. 603 LINE CODE Ch-Rp3	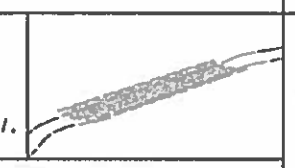	THIS ITEM CONSISTS OF LINING A CHANNEL WITH TYPE 3 RIP RAP 24" THICK (UNLESS SPECIFIED OTHERWISE) PLACED ON TOP OF A GEOTEXTILE UNDERLINER. THE RIP RAP SHALL PROTECT THE DITCH FLOWING TO A DEPTH "Dp" RECOMMENDED BY THE GDOT DITCH PROTECTION PROGRAM. ADDITIONAL EROSION CONTROL MEASURES MAY BE REQUIRED ALONG THIS CHANNEL SUCH AS Sdi-C. Rdc OR Sg. "Dp" SHALL BE IDENTIFIED IN A TABLE LOCATED ON THE SUMMARY OF QUANTITIES SHEETS
	Ch-V	CHANNEL GRASS SECTION 161. 700 LINE CODE Ch-V	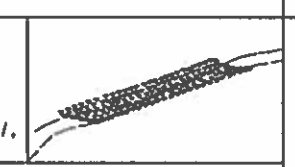	USED TO IMPROVE OR STABILIZE A NEW OR EXISTING CHANNEL. IT IS CONSTRUCTED IN STORMWATER DRAINAGE DITCHES. THIS MEASURE SHALL BE DESIGNED IN ACCORDANCE WITH THE GDOT DITCH PROTECTION PROGRAM ADDITIONAL EROSION CONTROL MEASURES MAY BE REQUIRED. TYPICALLY NOT SHOWN IN PLANS.

BY	REVISION	DATE
TC	UPDATED DRAWING NO.	1-24-13
TC	REVISED Cd-S DESCRIPTION.	10-2-12
	REMOVED Bm & Ch-Bc, AND RELOCATED Ch-Rp4, Ch-Rp3 AND Ch-V CODES FROM	
	ECLAUC SHEET 2 OF 6.	
GLO	REV. Bm, ADDED Bf, ESA, OBF AND Ch-F	8-13-07
GLO	REVISED TITLE BLOCK	1-19-07

DEPARTMENT OF TRANSPORTATION
STATE OF GEORGIA

EROSION CONTROL LEGEND
AND UNIFORM CODE SHEET
SHEET 1 OF 6

NO SCALE

JANUARY 2007

NUMBER
EC-LI

DRAWING No.
52-001

STATE	PROJECT NUMBER	SHEET NO.	TOTAL SHEETS
GA.			

CODE	PRACTICE STD :SPC's :SECTION	DETAIL	DESCRIPTION
Co	CONSTRUCTION EXIT CONSTRUCTION DETAIL	LINE CODE Co	A STONE STABILIZED PAD LOCATED AT ANY POINT WHERE TRAFFIC WILL BE EXITING A CONSTRUCTION SITE TO A PUBLIC ROAD. BEST USED AT ACCESS POINTS. I.e. NEW LOCATION PROJECTS. BORROW PITS. WASTE PITS. ACCESS ROADS. ETC. SHOULD BE MIN. 20' WIDE AND 50' LONG. AND 6" THICK. REQUIRES A GEOTEXTILE UNDERLINER. INCLUDED IN THE PRICE FOR THE CONSTRUCTION EXIT.
Dc-A	DIVERSION CHANNEL GEOTEXTILE, POLYETHYLENE FILM SECTION 163	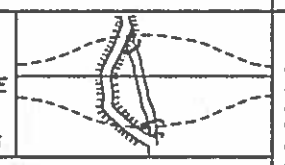 LINE CODE —D——D——D—Dc-A—D——D——D—	A DIVERSION CHANNEL IS A TEMPORARY CHANNEL CONSTRUCTED TO CONVEY FLOW AROUND A CONSTRUCTION SITE WHILE A PERMANENT DRAINAGE STRUCTURE IS BEING CONSTRUCTED IN A NATURAL STREAM. THIS IS A MEASURE USED TO PROTECT STREAM BEDS FROM EROSION. LINE THE CHANNEL WITH GEOTEXTILE OR POLYETHYLENE FILM. INSTALL TWO ROWS OF Sdi-C PARALLEL TO THE CHANNEL TO PREVENT SEDIMENT LADEN RUNOFF FROM ENTERING THE STREAM. THE SIZE OF THE CHANNEL WILL DEPEND ON THE DISCHARGE. CHANNEL GEOMETRY. CHANNEL SLOPE AND ROUGHNESS. IT IS DESIGNED FOR A TWO YEAR STORM FREQUENCY WITH A FLOW RATE BETWEEN 0-2.5 fps. CONSTRUCTION OF THE DIVERSION CHANNEL IS INCLUDED IN THE COST OF THE STRUCTURE.
Dc-B	DIVERSION CHANNEL GEOTEXTILE ONLY SECTION163	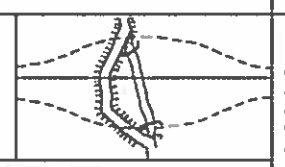 LINE CODE —D——D——D—Dc-B—D——D——D—	A DIVERSION CHANNEL IS A TEMPORARY CHANNEL CONSTRUCTED TO CONVEY FLOW AROUND A CONSTRUCTION SITE WHILE A PERMANENT DRAINAGE STRUCTURE IS BEING CONSTRUCTED IN A NATURAL STREAM. THIS IS A MEASURE USED TO PROTECT STREAM BEDS FROM EROSION. LINE THE CHANNEL WITH GEOTEXTILE ONLY. INSTALL TWO ROWS OF Sdi-C PARALLEL TO THE CHANNEL TO PREVENT SEDIMENT LADEN RUNOFF FROM ENTERING THE STREAM. THE SIZE OF THE CHANNEL WILL DEPEND ON THE DISCHARGE. CHANNEL GEOMETRY. CHANNEL SLOPE AND ROUGHNESS. IT IS DESIGNED FOR A TWO YEAR STORM FREQUENCY WITH A FLOW RATE BETWEEN 2.5-9.0 fps. CONSTRUCTION OF THE DIVERSION CHANNEL IS INCLUDED IN THE COST OF THE STRUCTURE.
Dc-C	DIVERSION CHANNEL RIPRAP AND GEOTEXTILE SECTION 163	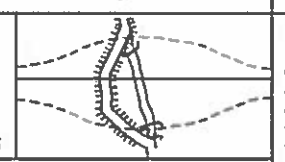 LINE CODE —D——D——D—Dc-C—D——D——D—	A DIVERSION CHANNEL IS A TEMPORARY CHANNEL CONSTRUCTED TO CONVEY FLOW AROUND A CONSTRUCTION SITE WHILE A PERMANENT DRAINAGE STRUCTURE IS BEING CONSTRUCTED IN A NATURAL STREAM. THIS IS A MEASURE USED TO PROTECT STREAM BEDS FROM EROSION. LINE THE CHANNEL WITH RIPRAP AND GEOTEXTILE. INSTALL TWO ROWS OF Sdi-C PARALLEL TO THE CHANNEL TO PREVENT SEDIMENT LADEN RUNOFF FROM ENTERING THE STREAM. THE SIZE OF THE CHANNEL WILL DEPEND ON THE DISCHARGE. CHANNEL GEOMETRY. CHANNEL SLOPE AND ROUGHNESS. IT IS DESIGNED FOR A TWO YEAR STORM FREQUENCY WITH A FLOW RATE BETWEEN 9.0-13.0 fps. CONSTRUCTION OF THE DIVERSION CHANNEL IS INCLUDED IN THE COST OF THE STRUCTURE.
Di	DIVERSION BERM CONSTRUCTION DETAIL SECTION 161, 205	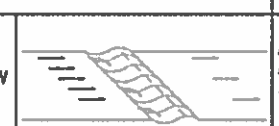 LINE CODE Di	THIS IS A TEMPORARY EARTHEN BERM WITH A COMPACTED SUPPORTING RIDGE ON THE LOWER SIDE TO BE USED AT AT THE EDGE OF EMBANKMENT DURING THE GRADING OPERATION. THE BERMS ARE ALSO CONSTRUCTED ABOVE. ACROSS OR BELOW A SLOPE TO REDUCE THE LENGTH OF A SLOPE. THEY ARE USED TO INTERCEPT RUNOFF. PREVENTING SLOPE EROSION AND TO DIRECT THE RUNOFF TO A STABLE OUTLET. DOWN DRAINS "Dnl"OR CATCHMENT AREAS AND ON ALL GRADING PROJECTS. SEE CHAPTER 6 OF THE MANUAL FOR EROSION AND SEDIMENT CONTROL IN GEORGIA FOR DESIGN CRITERIA AND DETAILS.

CODE	PRACTICE STD :SPC's :SECTION	DETAIL	DESCRIPTION
Dnl	DOWN DRAIN STRUCTURE FLEXIBLE CONSTRUCTION DETAIL SECTION 163	LINE CODE —T——T——T—Dnl—T——T——T—	A TEMPORARY PIPE SLOPE DRAIN IS A PLASTIC FLEXIBLE PIPE TO CARRY WATER FROM THE WORK AREA TO A LOWER ELEVATION. TEMPORARY SLOPE DRAINS SHOULD BE PLACED A INTERVALS OF 500 FEET ON A 0 TO 2 PERCENT GRADE. 200 FEET ON STEEPER GRADES AND MORE FREQUENTLY AS DICTATED BY FIELD CONDITIONS. THE USUAL PIPE SIZE IS 10 INCH CORRUGATED. THE OUTLET AREA SHOULD BE STABILIZED WITH SILT FENCE. SUMP HOLE. HAYBALES. ANGLING OUTLET IN UPHILL DIRECTION OR OTHER APPROPRIATE MEANS FOR VELOCITY DISSIPATION AND EROSION CONTROL. THE PIPE WILL BE ANCHORED WITH STAKES AT INTERVALS NOT TO EXCEED 10'.
Dn2-A	PERMANENT DOWN DRAIN STRUCTURE CONCRETE CONSTRUCTION DETAIL SECTION 441	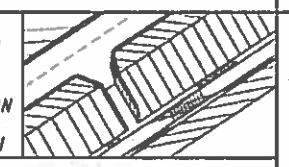 LINE CODE Dn2-A	A CONCRETE FLUME TYPE "A" IS USED TO DIRECT SURFACE RUNOFF DOWN A ROADWAY SLOPE INTO ANOTHER FORM OF CONTROL. IT IS USED IN ALL DEPRESSED AREAS WHERE WATER WILL FLOW DOWN THE SLOPE. IT IS DESIGNED FOR A 25 YEAR STORM AND MUST HAVE SOME FORM OF OUTLET PROTECTION. ADDITIONAL LABELING IS NOT REQUIRED IF SHOWN AS A PERMANENT DRAINAGE STRUCTURE ON THE CONSTRUCTION PLANS. INLETS SHALL BE SPACED ACCORDING TO GDOT GUIDELINES (REGARDING GUTTER SPREAD AND OR OTHER CRITERIA).
Dn2-B	PERMANENT DOWN DRAIN STRUCTURE CONCRETE CONSTRUCTION DETAIL SECTION 441	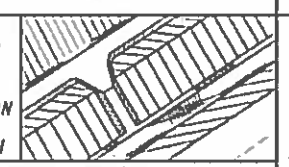 LINE CODE Dn2-B	A CONCRETE FLUME TYPE "B" IS USED TO DIRECT SURFACE DITCH RUNOFF DOWN A BACK SLOPE INTO ANOTHER FORM OF CONTROL. IT IS USED IN DEPRESSED AREAS WHERE CONCENTRATED OFFSITE WATER REACHES THE CUT SLOPE. IT IS DESIGNED TO SAFETLY CONVEY WATER DOWN THE CUT SLOPE. IT IS DESIGNED FOR A 25 YEAR STORM AND MUST HAVE SOME FORM OF OUTLET PROTECTION. ADDITIONAL LABELING IS NOT REQUIRED IF SHOWN AS A PERMANENT DRAINAGE STRUCTURE ON THE CONSTRUCTION PLANS. INLETS SHALL BE SPACED ACCORDING TO GDOT GUIDELINES (REGARDING GUTTER SPREAD AND OR OTHER CRITERIA).
Dn2-1	PERMANENT DOWNDRAIN STRUCTURE GA. STD. 9017J TPI, D-26 TPI SECTION 576, 577.	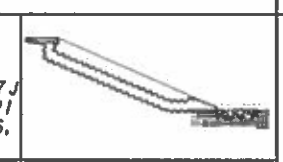 LINE CODE Dn2-1	CONCRETE DRAIN INLET WITH METAL PIPE IS USED TO DRAIN CURBS. ON A GRADE. DOWN TO A LOWER ELEVATION. THIS IS A PERMANENT STRUCTURE. REQUIRING OUTLET PROTECTION. TEMPORARY AND PERMANENT. INLETS SHALL BE SPACED ACCORDING TO GDOT GUIDELINES (REGARDING GUTTER SPREAD AND OR OTHER CRITERIA).

NOTE:
1. DO NOT USE EROSION CONTROL ITEMS IN A FLOWING STREAM OR IN A TIDAL AREA BELOW HIGH TIDE.
2. FOR ADDITIONAL INFORMATION ON THE DESIGN AND APPLICATION OF EROSION CONTROL MEASURES SEE THE GEORGIA SOIL AND WATER CONSERVATION COMMISSION. "MANUAL FOR EROSION AND SEDIMENT CONTROL IN GEORGIA".

BY	REVISION	DATE
TC	UPDATED DRAWING NO.	1-24-13
TC	REV. DN LABELS DESCRIPTIONS. RELOCATED Dn2-A, Dn2-B, AND Dn2-1 CODES FROM ECLAUC SHEET 3 OF 6.	10-1-12
GLO	REVISED ORDER	11-13-07
GLO	REVISED TITLE BLOCK	1-19-07

DEPARTMENT OF TRANSPORTATION
STATE OF GEORGIA

EROSION CONTROL LEGEND AND UNIFORM CODE SHEET
SHEET 2 OF 6

NO SCALE — JANUARY 2007

NUMBER EC-L2

DRAWING No. 52-002

STATE	PROJECT NUMBER	SHEET NO.	TOTAL SHEETS
GA.			

	CODE	PRACTICE STD :SPC's :SECTION	DETAIL	DESCRIPTION
	Dn2-2	PERMANENT DOWN DRAIN STRUCTURE GA. STD. 9017J TP2. D-26 TP2 SECTION 576, 577.	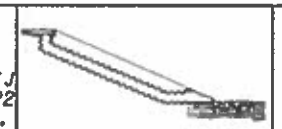 LINE CODE	CONCRETE DRAIN INLET AND METAL PIPE IS USED TO DRAIN CURB. IN A SAG. DOWN TO A LOWER ELEVATION. THIS IS A PERMANENT STRUCTURE. REQUIRING OUTLET PROTECTION. TEMPORARY AND PERMANENT. INLETS SHALL BE SPACED ACCORDING TO GDOT GUIDELINES (REGARDING GUTTER SPREAD AND OR OTHER CRITERIA).
	Ds1	MULCH SECTION 163	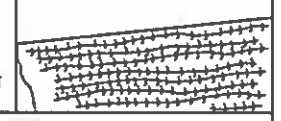 LINE CODE	THIS IS AN APPLICATION OF STRAW MULCH USED TO REDUCE SOIL EROSION AND STABILIZE THE SOIL. IT IS USED TO CONTROL EROSION IN AREAS WHERE PERMANENT VEGETATION IS OUT OF SEASON OR TO TEMPORARILY STABILIZE AREAS PRIOR TO FINAL GRADING.
	Ds2	TEMPORARY GRASSING SECTION 163	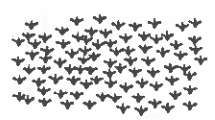 LINE CODE	THE SOWING OF A QUICK GROWING SPECIES OF GRASS SUITABLE TO THE AREA AND SEASON IS TO BE USED ON ALL PROJECTS.
	Ds3	PERMANENT GRASSING SECTION 700	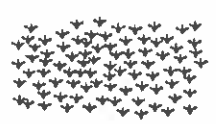 LINE CODE	THE SOWING OF PERMANENT VEGETATION. SUCH AS GRASS. SUITABLE TO THE AREA AND SEASON IS TO BE USED ON ALL PROJECTS. PERMANENT VEGETATIVE REQUIREMENTS ARE ADDRESSED BY STANDARD SPECIFICATIONS AND ARE NOT TYPICALLY SHOWN ON THE PLANS; HOWEVER. THEY MAY BE SHOWN ON THE PLANS FOR HIGHLY SENSITIVE AREAS WHERE THESE VEGETATIVE PRACTICES ARE CRITICAL.
	Ds4	SODDING SECTION 700	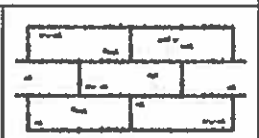 PATTERN	THE INSTALLATION OF A SPECIES OF GRASS SODDING SUITABLE TO THE AREA AND SEASON TO PROVIDE IMMEDIATE PERMANENT VEGETATION. SODDING MAY BE SHOWN FOR HIGHLY SENSITIVE AREAS. TO IMPROVE AESTHETICS. OR FOR SPECIAL PLANTING REQUIREMENTS ON THE BASIS OF ENVIRONMENTAL COMMITMENTS OR LANDSCAPING REQUIREMENTS.

	CODE	PRACTICE STD :SPC's :SECTION	DETAIL	DESCRIPTION
	Fr	FILTER RING CONSTRUCTION DETAIL	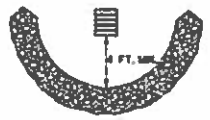 LINE CODE	A TEMPORARY STONE BARRIER CONSTRUCTED AT DRAINAGE STRUCTURE INLETS. THIS REDUCES THE VELOCITY OF THE RUNOFF AND FILTERS SEDIMENT FROM THE RUNOFF. SEE CHAPTER 6 OF THE MANUAL FOR EROSION AND SEDIMENT CONTROL IN GEORGIA FOR DESIGN CRITERIA AND DETAILS.
	Mb	EROSION CONTROL MATS CONSTRUCTION DETAIL SECTION 716	PATTERN	ALL CUT OR FILL SLOPES OF 2.5:1 OR STEEPER AND WITHIN 50' OF ALL CROSS DRAINS AND CULVERTS.
	Ps	PERMANENT SOIL REINFORCING MAT CONSTRUCTION DETAIL SECTION 710	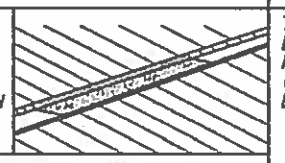 LINE CODE	THIS THREE DIMENSIONAL EROSION CONTROL MAT IS USED IN DITCHES TO STABILIZE THE SOIL BY REINFORCING THE GRASS ROOTS TO PROVIDE LONG-TERM PROTECTION FOR SHEAR STRESSES. (THIS IS ALSO CALLED "Mb" IN THE MANUAL FOR EROSION & SEDIMENT CONTROL IN GEORGIA.)
	Rd	ROCK FILTER DAM CONSTRUCTION DETAIL SECTION 163, 603.	LINE CODE	ROCK FILTER DAMS ARE CONSTRUCTED OF TYPE 3 STONE RIP RAP AND ARE USED TO PROTECT SMALL STREAMS OR DRAINAGEWAYS. TO BE USED IN SMALL DRAINAGE CHANNELS OF 50 ACRES OR LESS. THE RIP RAP SHOULD BE PLACED ON A GEOTEXITLE UNDERLINER.

NOTE:
1. DO NOT USE EROSION CONTROL ITEMS IN A FLOWING STREAM OR IN A TIDAL AREA BELOW HIGH TIDE.
2. FOR ADDITIONAL INFORMATION ON THE DESIGN AND APPLICATION OF EROSION CONTROL MEASURES. SEEE THE GEORGIA SOIL AND WATER CONSERVATION COMMISSION. "MANUAL FOR EROSION AND SEDIMENT CONTROL IN GEORGIA".

BY	REVISION	DATE
TC	UPDATED DRAWING NO. ADDED Ds3 & Ds4 CODES, RELOC. Rp & Rt-P CODES TO DRAWING NO. 52-004.	1-24-13
TC	RELOCATED Rd, Rp, & Rt-B CODES FROM ECLBUC SHEET 4 OF 6.	10-2-12
CLO	DELETED Fe. REVISED ORDER	8-13-07
CLO	REVISED TITLE BLOCK.	1-19-07

DEPARTMENT OF TRANSPORTATION
STATE OF GEORGIA

EROSION CONTROL LEGEND
AND UNIFORM CODE SHEET
SHEET 3 OF 6

NO SCALE — JANUARY 2007

NUMBER EC-L3

DRAWING No. 52-003

STATE	PROJECT NUMBER	SHEET NO.	TOTAL SHEETS
GA.			

	CODE	PRACTICE STD :SPC's :SECTION	DETAIL	DESCRIPTION
	Rp	RIPRAP SECTION 603 PATTERN	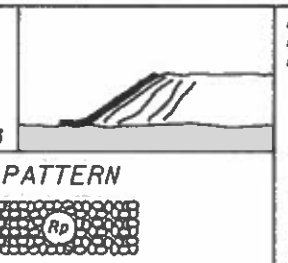	RIP RAP IS A FLEXIBLE PERMANENT BLANKET FOR PROTECTION OF FILL SLOPES AND END ROLLS. RIP RAP, TYPE I SHOULD BE PLACED ON TOP OF A GEOTEXITLE UNDERLINER AT A MINIMUM 24" THICKNESS OR AS INDICATED ON THE PLANS.
	Rt-P	RETROFITTING CONSTRUCTION DETAIL SECTION 163 LINE CODE	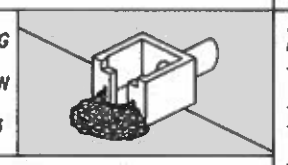	A PERFORATED HALF-ROUND PIPE WITH STONE FILTER PLACED IN FRONT OF A PERMANENT STORMWATER DETENTION POND OUTLET STRUCTURE TO SERVE AS A TEMPORARY SEDIMENT FILTER. SHOULD BE USED ONLY IN DETENTION PONDS WITH LESS THAN 30 ACRES TOTAL DRAINAGE AREA. SHALL ONLY BE USED IN DETENTION BASINS LARGE ENOUGH TO STORE 67 CUBIC YARDS OF SEDIMENT PER ACRE OF DISTURBED AREA. THIS ITEM SHOULD BE DESIGNED ACCORDING TO CHAPTER 6 IN THE "MANUAL FOR EROSION AND SEDIMENT CONTROL IN GEORGIA"
	Rt-B	RETROFITTING CONSTRUCTION DETAIL SECTION 163 LINE CODE	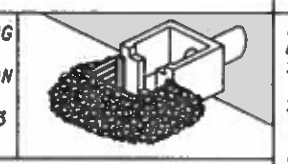	A SLOTTED BOARD DAM WITH STONE PLACED IN FRONT OF A PERMANENT STORMWATER DETENTION POND OUTLET STRUCTURE TO SERVE AS A TEMPORARY SEDIMENT FILTER. SHOULD BE USED ONLY IN DETENTION PONDS WITH LESS THAN 100 ACRES TOTAL DRAINAGE AREA. SHALL ONLY BE USED IN DETENTION BASINS LARGE ENOUGH TO STORE 67 CUBIC YARDS OF SEDIMENT PER ACRE OF DISTURBED AREA. THIS ITEM SHOULD BE DESIGNED ACCORDING TO CHAPTER 6 IN THE "MANUAL FOR EROSION AND SEDIMENT CONTROL IN GEORGIA"
	Rt-BSg1 Rt-BSg2 Rt-BSg3	SILT CONTROL GATES CONSTRUCTION DETAIL D-20 SECTION 163 LINE CODE	 FRONT VIEW	A SILT CONTROL GATE IS A STRUCTURE PLACED ON A PIPE. SMALL BOX CULVERT, OR DROP INLET TO FORM A BASIN TO CATCH SILT AND PREVENT IT FROM LEAVING THE CONSTRUCTION SITE. IT IS EFFECTIVE ON SMALL DRAINAGE AREAS ONLY. DO NOT USE IN STATE WATERS. Rt-BSg1-TYPE 1: USED ON BOX CULVERTS Rt-BSg2-TYPE 2: USED ON STRAIGHT HEADWALLS Rt-BSg3-TYPE 3: USED ON FLARED END SECTIONS AND TAPERED HEADWALLS
	Sb-F	SILT RETENTION BARRIER FLOATING SECTION 170 LINE CODE	 FLOATING	A FLOATING BARRIER IS USED TO PREVENT SEDIMENT FROM MOVING IN WATER BY FORCING IT TO DROP OUT OF SUSPENSION BEFORE IT MOVES OUT OF THE CONSTRUCTION AREA. IT IS USUALLY USED WHERE CONSTRUCTION IS REQUIRED IN A LARGE BODY OF WATER SUCH AS LAKES AND RIVERS. IT SHOULD BE USED AS DIRECTED BY THE ENGINEER. THIS ITEM IS ONLY TO BE USED WHEN PERMITTED FILL IS BEING PLACED INTO A STATE WATER, OR AS A SUPPLEMENT TO ADEQUATELY PLACED BMP'S.

	CODE	PRACTICE STD :SPC's :SECTION	DETAIL	DESCRIPTION
	Sb-S	SILT RETENTION BARRIER STAKED SECTION 170 LINE CODE	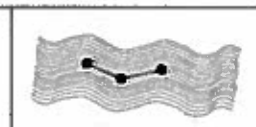 STAKED	A STAKED BARRIER IS USED TO PREVENT SEDIMENT FROM MOVING IN WATER BY FORCING IT TO DROP OUT OF SUSPENSION BEFORE IT MOVES OUT OF THE CONSTRUCTION AREA. IT IS USUALLY USED WHERE CONSTRUCTION IS REQUIRED IN SHALLOW INUNDATED AREAS. IT SHOULD BE USED AS DIRECTED BY THE ENGINEER. A STAKED BARRIER MAY BE USED TO PROTECT A SMALL STREAM WHILE IT IS BEING REALIGNED OR WIDENED IN "Chl". IN THIS CASE THE BARRIER SHOULD EXTEND TO THE BOTTOM OF THE STREAM. IT SHOULD BE LIMITED TO 5' IN HEIGHT UNLESS OTHERWISE DIRECTED. STAKED BARRIERS IN SMALL STREAMS SHOULD EXTEND 1' ABOVE NORMAL WATER. THIS ITEM IS ONLY TO BE USED WHEN PERMITTED FILL IS BEING PLACED INTO A STATE WATER, OR AS A SUPPLEMENT TO ADEQUATELY PLACED BMP'S.
	Sdl-A	SILT FENCE TYPE A CONSTRUCTION DETAIL SECTION 171 LINE CODE	 	USED ALONG THE TOE OF FILLS LESS THAN 10' HIGH, ALONG THE RIGHT OF WAY LINE OR PARALLEL TO STREAMS. THE FENCE SHOULD NEVER RUN CONTINUOUS. IT SHOULD TURN BACK INTO THE FILL TO CREATE SMALL POCKETS TO TRAP SILT.
	Sdl-B	SILT FENCE TYPE B CONSTRUCTION DETAIL SECTION 171 LINE CODE	 	TYPE B MAY BE USED IN LIEU OF BALED STRAW AND AT THE TOE OF FILLS LESS THAN 10 FEET HIGH.
	Sdl-C	SILT FENCE TYPE C CONSTRUCTION DETAIL SECTION 171 LINE CODE	 	A WOVEN SYNTHETIC FIBER FABRIC PLACED IN FRONT OF A WIRE FENCE. IT CAN BE USED ALONG THE TOE OF THE FILL, ALONG THE RIGHT OF WAY LINE OR PARALLEL TO STREAMS. IT IS USED TO CAPTURE SEDIMENT FROM FILLS OVER 10 FEET HIGH AND UNDER ALL BRIDGES.

NOTE:
1. DO NOT USE EROSION CONTROL ITEMS IN A FLOWING STREAM OR IN A TIDAL AREA BELOW HIGH TIDE.
2. FOR ADDITIONAL INFORMATION ON THE DESIGN AND APPLICATION OF EROSION CONTROL MEASURES, SEEE THE GEORGIA SOIL AND WATER CONSERVATION COMMISSION, "MANUAL FOR EROSION AND SEDIMENT CONTROL IN GEORGIA".

BY	REVISION	DATE
TC	UPDATED DRAWING NO. & RELOCATED Sdl-B&Sdl-Hb CODES TO DRAWING NO. 52-005.	1-24-13
TC	RELABELED AND RELOCATED Sg-1,Sg-2,Sg-3 TO Rt-BSg1, Rt-BSg2,& Rt-BSg3 CODES AND Sdl-Hb,Sdl-Hb CODES FROM EC&BUC SHT.5 OF 6.	10-2-12
GLO	REV. Sdl-A	11-13-07
GLO	REV. Sb-F, Sb-S, Sdl-A, Sdl-B AND Sdl-C.	11-13-07
GLO	REVISED TITLE BLOCK	1-19-07

DEPARTMENT OF TRANSPORTATION
STATE OF GEORGIA

EROSION CONTROL LEGEND AND UNIFORM CODE SHEET
SHEET 4 OF 6

NO SCALE — JANUARY 2007

NUMBER EC-L4 — DRAWING No. 52-004

STATE	PROJECT NUMBER	SHEET NO.	TOTAL SHEETS
GA.			

	CODE	PRACTICE STD :SPC's :SECTION	DETAIL	DESCRIPTION
	Sd1-Bb	BRUSH BARRIER CONSTRUCTION DETAIL LINE CODE * * * Sd1-Bb * * *	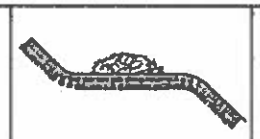	THIS ITEM CONSISTS OF INTERMINGLED BRUSH. LOGS. ETC. SO AS NOT TO FORM A SOLID DAM. CONSTRUCTED AT THE TOE OF FILL SLOPES DURING THE CLEARING AND GRUBBING OPERATION. THE BARRIER SHOULD BE USED AT THE TOE OF FILL SLOPES ON GRADING PROJECTS IN RURAL AREAS WHERE SUFFICIENT RIGHT OF WAY OR EASEMENT IS AVAILABLE (10 FEET OR MORE). THE BARRIER SHOULD RUN ROUGHLY PERPENDICULAR TO THE FLOW OF WATER WHERE THIS DOES NOT CONFLICT WITH RIGHT OF WAY OR EASEMENT LIMITS. THEY WILL NOT BE PLACED IN WETLANDS. PAYMENT FOR THIS ITEM IS INCLUDED IN THE CLEARING AND GRUBBING COST. NO SEPERATE PAYMENT SHALL BE MADE.
	Sd1-Hb	SEDIMENT BARRIER CONSTRUCTION DETAIL SECTION 163 LINE CODE —S——S——S—Sd1-Hb—S——S——S—		A BARRIER OF BALED STRAW IS USED TO PREVENT SEDIMENT FROM LEAVING THE CONSTRUCTION SITE. IT IS USED IN DITCHES AS DITCH CHECKS OR ALONG THE TOE OF SLOPE OR RIGHT OF WAY IN FILLS LESS THAN 10 FEET HIGH. THE BALES SHOULD RUN PARALLEL TO THE SILT YIELDING AREA UNTIL THE TOP OF THE BALE IS 6 INCHES LOWER THAN THE GROUND ELEVATION OF THE BEGINNING BALE. THEY SHOULD THEN TURN INTO THE FILL WITH A LOW POINT FOR THE WATER TO DRAIN OVER THE BALE. IN DITCHES. BALED STRAW SHOULD BE PERPENDICULAR TO THE FLOW. USED FOR SLOPES LESS THAN 1%. USE 100' SPACING. BALED STRAW SHALL BE STAKED SECURELY TO THE GROUND.
	Sd2-B	BAFFLE BOX INLET SEDIMENT TRAP CONSTRUCTION DETAIL D42 SPECIFICATIONS SECTION 163 LINE CODE	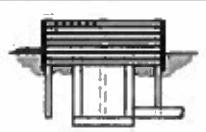	USED FOR INLETS RECEIVING RUNOFF WITH A HIGHER VOLUME OR VELOCITY. A GUIDE FOR USE WILL BE FOR AN INLET RECEIVING A 0-7cfs.
	Sd2-Bg	BLOCK & GRAVEL DROP INLET PROTECTION CONSTRUCTION DETAIL D42 SPECIFICATIONS SECTION 163 LINE CODE	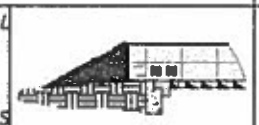	USED FOR INLET PROTECTION WHERE HEAVY FLOWS ARE EXPECTED AND WHERE OVERFLOW CAPACITY IS NECESSARY TO PREVENT EXCESSIVE PONDING AROUND THE STRUCTURE. CAN BE USED AT CULVERT INLETS. A GUIDE FOR USE WILL BE FOR AN INLET RECEIVING A 0-5-7 cfs.
	Sd2-F	INLET SEDIMENT TRAP CONSTRUCTION DETAILS SECTION 163 (a) OR (b) OR (c) LINE CODE	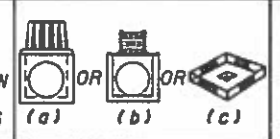	(a) A SEDIMENT BARRIER CONSISTING OF A PREFABRICATED FRAME WITH FILTER FABRIC USED AROUND A DROP INLET OR CATCH BASIN (b) A SEDIMENT BARRIER CONSISTING OF A PERFORATED METAL STAND PIPE WITH FILTER FABRIC USED AROUND A DROP INLET OR CATCH BASIN (c) TYPE C SILT FENCE WITH SUPPORTING FRAME CAN BE USED AS AN ALTERNATE TO INLET SEDIMENT TRAP FOR AREAS WITH SLOPES < 5% THIS ITEM IS USED TO PREVENT SILT FROM ENTERING THE PIPE SYSTEM. SHALL NOT APPLY TO INLETS RECIEVING CONCENTRATED FLOWS. RECOMMENDED FOR INLET RECEIVING FLOWS THAT RANGE FROM 0-0-4 cfs.

	CODE	PRACTICE STD :SPC's :SECTION	DETAIL	DESCRIPTION
	Sd2-G	GRAVEL DROP INLET PROTECTION CONSTRUCTION DETAIL D42 SPECIFICATIONS SECTION 163 LINE CODE		USED FOR INLET PROTECTION WHERE HEAVY CONCENTRATED FLOWS ARE EXPECTED. STONE AND GRAVEL ARE USED TO TRAP SEDIMENT. THE SLOPE TOWARD THE INLET SHALL BE NO MORE THAN 3:1. A GUIDE FOR USE WILL BE FOR AN INLET RECEIVING A 0-3-5 cfs.
	Sd3	SEDIMENT BASIN CONSTRUCTION DETAIL SECTION 163 LINE CODE	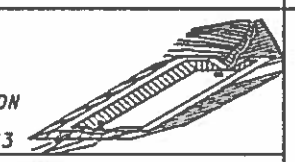	A BASIN EXCAVATED OR AN AREA THAT IS DAMMED. THE BASIN IS DESIGNED TO HOLD A SEDIMENT LOAD OF 67 CUBIC YARDS OF VOLUME PER ACRE OF DRAINAGE AREA. IT IS USED FOR DRAINAGE AREAS OF 3 TO 5 ACRES OR WHERE A ROADWAY CUTS OR FILLS EXCEEDS 1,000 FEET IN LENGTH. IF A SEDIMENT BASIN IS USED ON AN AREA LARGER THAN 5 ACRES SPECIAL CONSIDERATION FOR CLEAN OUT IS REQUIRED. SUFFICIENT RIGHT OF WAY OR PERMANENT EASEMENT NEEDED FOR THE BASIN AND ACCESS FOR CLEAN OUT VIA A ROUTE WITH 3:1 SLOPES OR LESS. SEDIMENT BASINS SHOULD ALSO BE CONSIDERED WHERE HIGH FILLS OVER 30 FEET DRAIN TO ONE LOCATION.
	Sr	STREAM CROSSING SECTION 161 LINE CODE	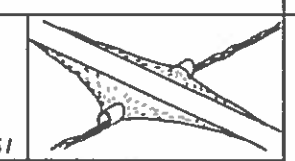	A TEMPORARY BRIDGE OR PIPE STRUCTURE PROTECTING A STREAM OR WATER COURSE FROM DAMAGE BY CONSTRUCTION EQUIPMENT. THIS AREA MUST BE COMPLETELY STABILIZED. THIS ITEM MUST BE DESIGNED ACCORDING TO CHAPTER 6 OF THE MANUAL FOR EROSION CONTROL IN GEORGIA FOR CONTRACTOR'S USE ONLY

NOTE:
1. DO NOT USE EROSION CONTROL ITEMS IN A FLOWING STREAM OR IN A TIDAL AREA BELOW HIGH TIDE.
2. FOR ADDITIONAL INFORMATION ON THE DESIGN AND APPLICATION OF EROSION CONTROL MEASURES. SEEE THE GEORGIA SOIL AND WATER CONSERVATION COMMISSION. "MANUAL FOR EROSION AND SEDIMENT CONTROL IN GEORGIA".

BY	REVISION	DATE
TC	UPDATED DRAWING NO.& RELOCATED Sf & Sf-Hp	1-24-13
	CODES TO DRAWING NO. 52-006.	
TC	DEL. Sg-1, Sg-2, Sg-3 CODES RELOCATED S1 & S1-Hb.	10-2-02
	CODES FROM ECL & UC SHT.6 OF 6.	
GLO	REV. Sg-1, Sg-2 AND Sg-3	9-13-07
GLO	REVISED TITLE BLOCK	1-15-07

DEPARTMENT OF TRANSPORTATION
STATE OF GEORGIA

EROSION CONTROL LEGEND AND UNIFORM CODE SHEET

SHEET 5 OF 6

NO SCALE

JANUARY 2007

NUMBER EC-L5

DRAWING No. 52-005

STATE	PROJECT NUMBER	SHEET NO.	TOTAL SHEETS
GA.			

	CODE	PRACTICE STD :SPC's :SECTION	DETAIL	DESCRIPTION
	St	STORM DRAIN OUTLET PROTECTION GA. STD. 1125 & 2332	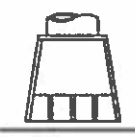 LINE CODE St	A PIPE OR BOX CULVERT OUTLET HEADWALL WITH AN APRON AND DISSIPATOR BLOCKS IS USED TO PREVENT EROSION AND TO SLOW WATER. IT IS USED ON THE OUTLET OF ALL BOX CULVERTS AND ON 48" AND LARGER PIPES. MAY BE USED ON INLET FOR FLOWING STREAMS. USE ON SMALL PIPES WHEN OUTLET VELOCITY IS 12 fps AND GREATER.
	St-Rp	STORM DRAIN OUTLET PROTECTION SECTION 603	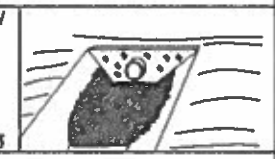 PATTERN St-Rp	THIS ITEM IS ADDED TO "St" WHEN ADDITIONAL PROTECTION IS NEEDED. TYPE I RIP RAP PLACED ON FILTER FABRIC SHOULD BE USED AT A 24" THICKNESS. MAY BE USED ON INLETS FOR FLOWING STREAMS. REFER TO CHARTS IN "MANUAL FOR EROSION AND SEDIMENT CONTROL IN GEORGIA" FOR QUANTITIY DETERMINATION.
	Su	SURFACE ROUGHENING SERRATED SLOPES CONSTRUCTION DETAIL SECTION 205	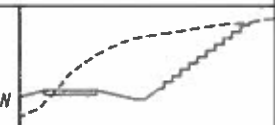 LINE CODE Su (LINE CODE Su IS SHOWN ON THE PLANS FOR SERRATED SLOPES WHERE SPECIFIED IN THE SOIL SURVEY.)	PROVIDING A ROUGH SOIL SURFACE WITH HORIZONTAL DEPRESSIONS, BY OPERATING A CLEATED DOZER ON THE SLOPE IN A VERTICAL DIRECTION. CREATING SERRATED SLOPES IN THE GRADING PROCESS TO CONSTRUCT BENCHES WILL REDUCE RUNOFF VELOCITY AND INCREASE INFILTRATION OF WATER. IN MOST CASES THIS ITEM IS NOT REQUIRTED TO BE SHOWN ON THE PLANS, BUT REQUIRED TO BE COMPLETED BY THE CONTRACTOR UNDER ALL PROJECTS. IF SERRATED SLOPES ARE USED ON THE PROJECT, THEN THIS ITEM SHALL BE SHOWN WHERE SERRATED SLOPES ARE TO BE USED.
	Trm-1	TURF REINFORCEMENT MAT CONSTRUCTION DETAIL SECTION 711	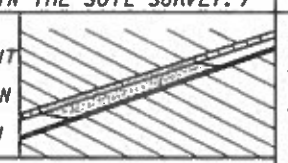 LINE CODE Trm-1	THIS THREE DIMENSIONAL EROSION CONTROL MAT IS USED IN DITCHES TO STABILIZE THE SOIL BY REINFORCING THE GRASS ROOTS TO PROVIDE LONG-TERM PROTECTION FOR SHEAR STRESSES 0-2 psf. (THIS IS ALSO CALLED "Mb" IN THE MANUAL FOR EROSION & SEDIMENT CONTROL IN GEORGIA.)
	Trm-2	TURF REINFORCEMENT MAT CONSTRUCTION DETAIL SECTION 711	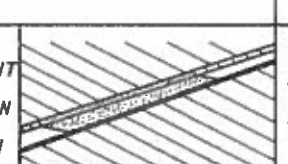 LINE CODE Trm-2	THIS THREE DIMENSIONAL EROSION CONTROL MAT IS USED IN DITCHES TO STABILIZE THE SOIL BY REINFORCING THE GRASS ROOTS TO PROVIDE LONG-TERM PROTECTION FOR SHEAR STRESSES 0-4 psf. (THIS IS ALSO CALLED "Mb" IN THE MANUAL FOR EROSION & SEDIMENT CONTROL IN GEORGIA.)

	CODE	PRACTICE STD :SPC's :SECTION	DETAIL	DESCRIPTION
	Trm-3	TURF REINFORCEMENT MAT CONSTRUCTION DETAIL SECTION 711	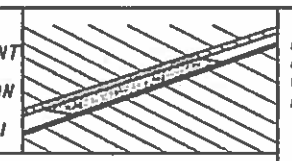 LINE CODE Trm-3	THIS THREE DIMENSIONAL EROSION CONTROL MAT IS USED IN DITCHES TO STABILIZE THE SOIL BY REINFORCING THE GRASS ROOTS TO PROVIDE LONG TERM PROTECTION FOR SHEAR STRESSES 0-6 psf. (THIS IS ALSO CALLED "Mb" IN THE MANUAL FOR EROSION & SEDIMENT CONTROL IN GEORGIA.)
	Trm-4	TURF REINFORCEMENT MAT CONSTRUCTION DETAIL SECTION 711	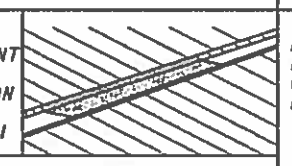 LINE CODE Trm-4	THIS THREE DIMENSIONAL EROSION CONTROL MAT IS USED IN DITCHES TO STABILIZE THE SOIL BY REINFORCING THE GRASS ROOTS TO PROVIDE LONG-TERM PROTECTION FOR SHEAR STRESSES 0-8 psf. (THIS IS ALSO CALLED "Mb" IN THE MANUAL FOR EROSION & SEDIMENT CONTROL IN GEORGIA.)
	Trm-5	TURF REINFORCEMENT MAT CONSTRUCTION DETAIL SECTION 711	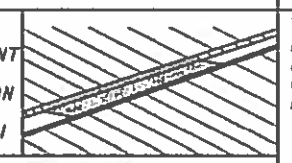 LINE CODE Trm-5	THIS THREE DIMENSIONAL EROSION CONTROL MAT IS USED IN DITCHES TO STABILIZE THE SOIL BY REINFORCING THE GRASS ROOTS TO PROVIDE LONG-TERM PROTECTION FOR SHEAR STRESSES 0-10 psf. (THIS IS ALSO CALLED "Mb" IN THE MANUAL FOR EROSION & SEDIMENT CONTROL IN GEORGIA.)
	Trm-6	TURF REINFORCEMENT MAT CONSTRUCTION DETAIL SECTION 711	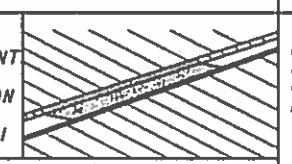 LINE CODE Trm-6	THIS THREE DIMENSIONAL EROSION CONTROL MAT IS USED IN DITCHES TO STABILIZE THE SOIL BY REINFORCING THE GRASS ROOTS TO PROVIDE LONG-TERM PROTECTION FOR SHEAR STRESSES 0-12 psf. (THIS IS ALSO CALLED "Mb" IN THE MANUAL FOR EROSION & SEDIMENT CONTROL IN GEORGIA.)

NOTE:
1. DO NOT USE EROSION CONTROL ITEMS IN A FLOWING STREAM OR IN A TIDAL AREA BELOW HIGH TIDE.
2. FOR ADDITIONAL INFORMATION ON THE DESIGN AND APPLICATION OF EROSION CONTROL MEASURES. SEEE THE GEORGIA SOIL AND WATER CONSERVATION COMMISSION, "MANUAL FOR EROSION AND SEDIMENT CONTROL IN GEORGIA".

BY	REVISION	DATE
TC	UDATED DRAWING NO.	1-24-13
TC	ADDED Trm-1, Trm-2, Trm-3, Trm-4, Trm-5, AND Trm-6. CODES AND DESCRIPTIONS. RELOCATED St, & St-Rp CODES TO ECL & UC SHT. 5 of 6.	10-2-12

DEPARTMENT OF TRANSPORTATION
STATE OF GEORGIA

EROSION CONTROL LEGEND AND UNIFORM CODE SHEET
SHEET 6 OF 6

NO SCALE — NOV., 2007

NUMBER EC-L6 — DRAWING No. 52-006

12/22/2015 9:44:29 AM
USER:Emily_Owen-EST
gplotborder-V8I-PO_STE-eac.tbl
P:\Projects_Legacy\ATL-P_Drive\1528\60427168 Dekalb County\900-CAD-GIS\910 CAD_BIM\912 - WADZ KC\DGN\AOD\07-900fi7er01.dgn

COUNTY	PROJECT NUMBER	SHEET NO.	TOTAL SHEETS
DEKALB	0012613	67	73

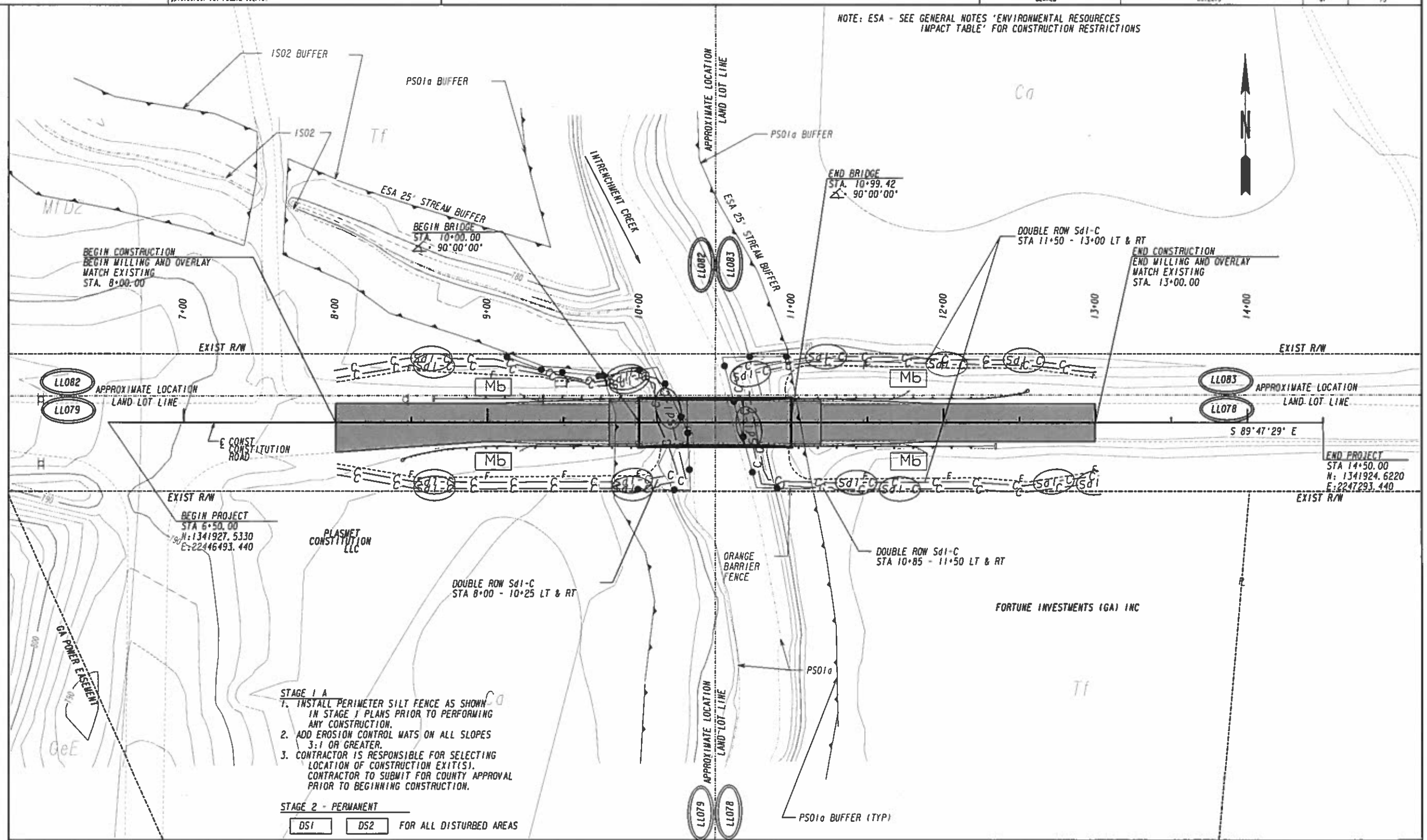

PROPOSED CONSTRUCTION

Ca CONSTRUCTION EXIT

EROSION CONTROL MATS

—C—C—Sd1-C— SILT FENCE - TYPE C

—S—S—S—S— BALED STRAW

Ch-Rp3 RIP RAP DITCH LINING

ORANGE BARRIER FENCE

AECOM

SCALE IN FEET
0 30 60 120

REVISION DATES

DEKALB COUNTY
DEPARTMENT OF TRANSPORTATION

BMP LOCATION DETAILS
STAGE 1

CONSTITUTION ROAD
BRIDGE OVER INTRENCHMENT CREEK

DRAWING No.
54-001

12/22/2015 9:44:29 AM
USER:Emily.Owens-EST
gplotborder-V8I-PO_STE.cfg.tbl
P:\Projects_Legacy\ATL-P_Drive\528\60427\68 Dekalb County\900-CAD-GIS\9\D CAD_BIM\912 - WADZ KC\DGN\RDT\07-900717orDZ.dgn

COUNTY	PROJECT NUMBER	SHEET NO.	TOTAL SHEETS
DEKALB	0012613	68	73

STAGE 1 A
1. INSTALL PERIMETER SILT FENCE AS SHOWN IN STAGE 1 PLANS PRIOR TO PERFORMING ANY CONSTRUCTION.
2. ADD EROSION CONTROL MATS ON ALL SLOPES 3:1 OR GREATER.
3. CONTRACTOR IS RESPONSIBLE FOR SELECTING LOCATION OF CONSTRUCTION EXIT(S). CONTRACTOR TO SUBMIT FOR COUNTY APPROVAL PRIOR TO BEGINNNING CONSTRUCTION.

STAGE 2 - PERMANENT
DS1 DS2 FOR ALL DISTURBED AREAS

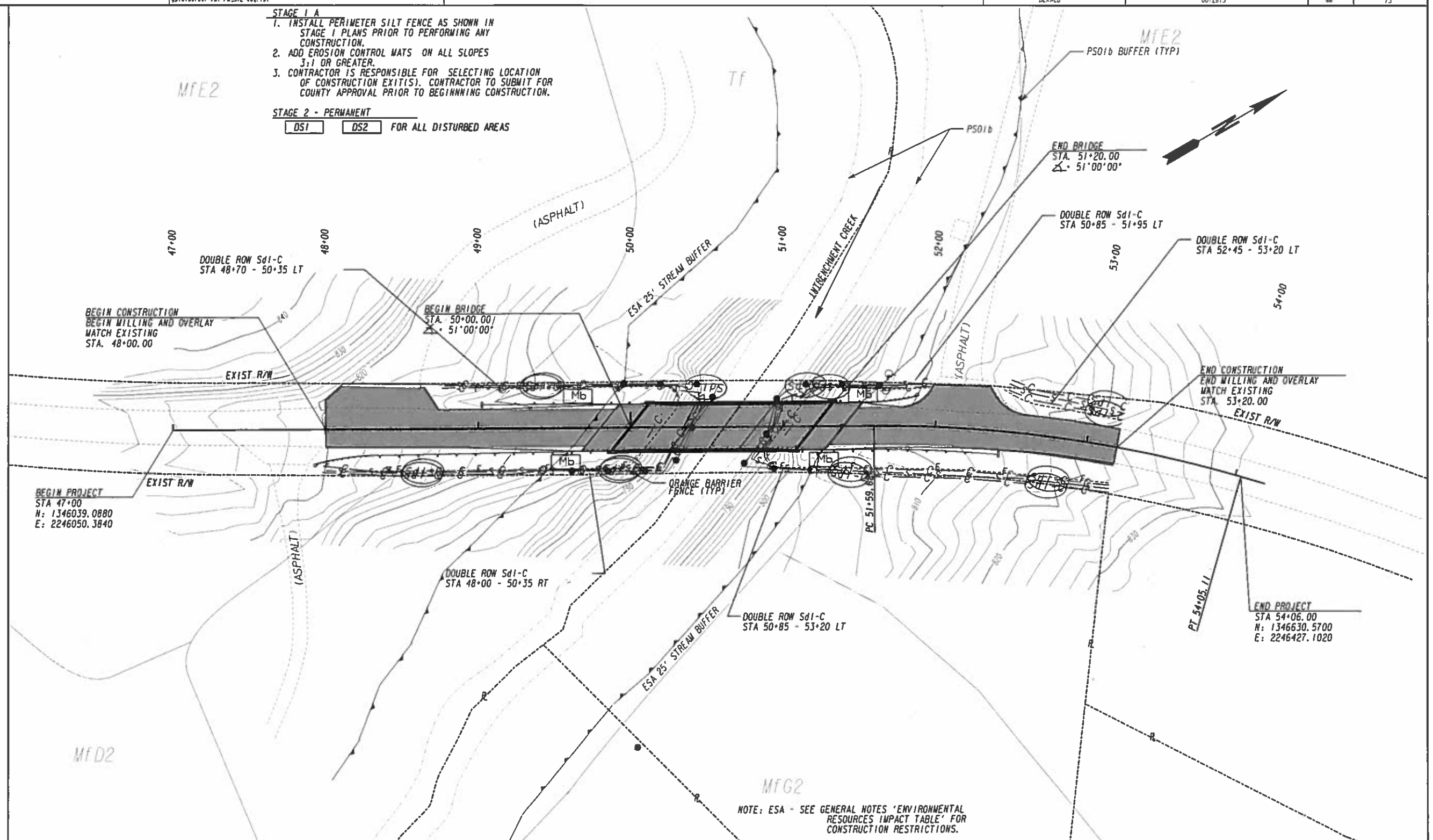

PROPOSED CONSTRUCTION
CONSTRUCTION EXIT
EROSION CONTROL MATS

—C—C—Sd1-C— SILT FENCE - TYPE C
—S—S—S—S— BALED STRAW
Ch-Rp3 RIP RAP DITCH LINING
ORANGE BARRIER FENCE

AECOM

SCALE IN FEET
0 30 60 120

REVISION DATES

DEKALB COUNTY
DEPARTMENT OF TRANSPORTATION

BMP LOCATION DETAILS
STAGE 1

KEY ROAD
BRIDGE OVER INTRENCHMENT CREEK

DRAWING NO.
54-002

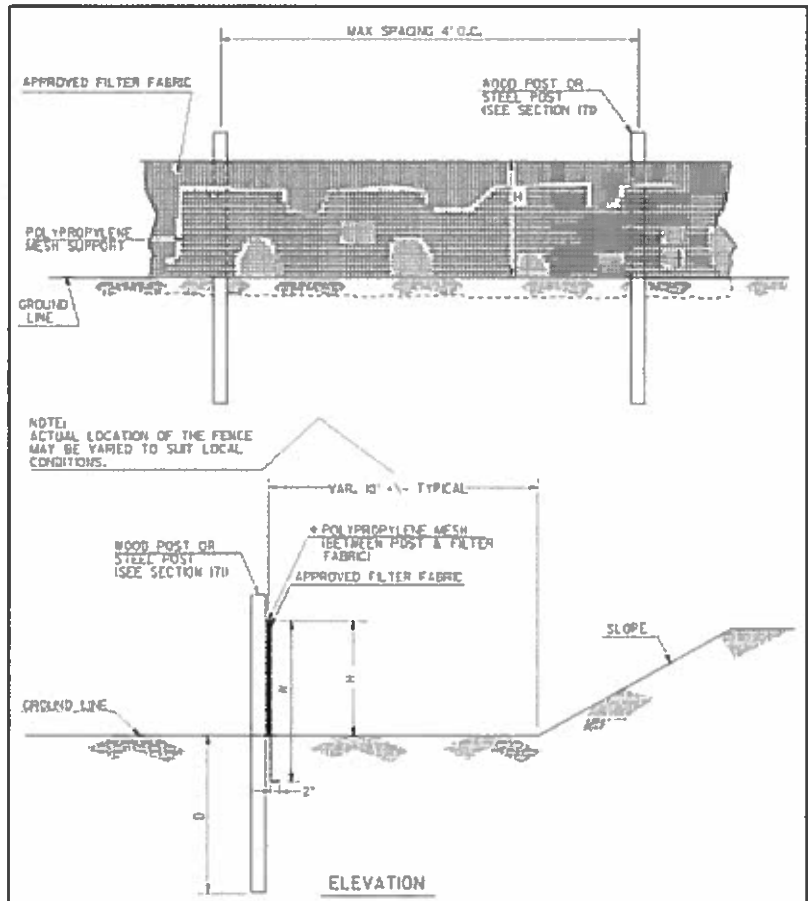

SINGLE ROW TYPE C SILT FENCE WITH POLYPROPYLENE MESH SUPPORT

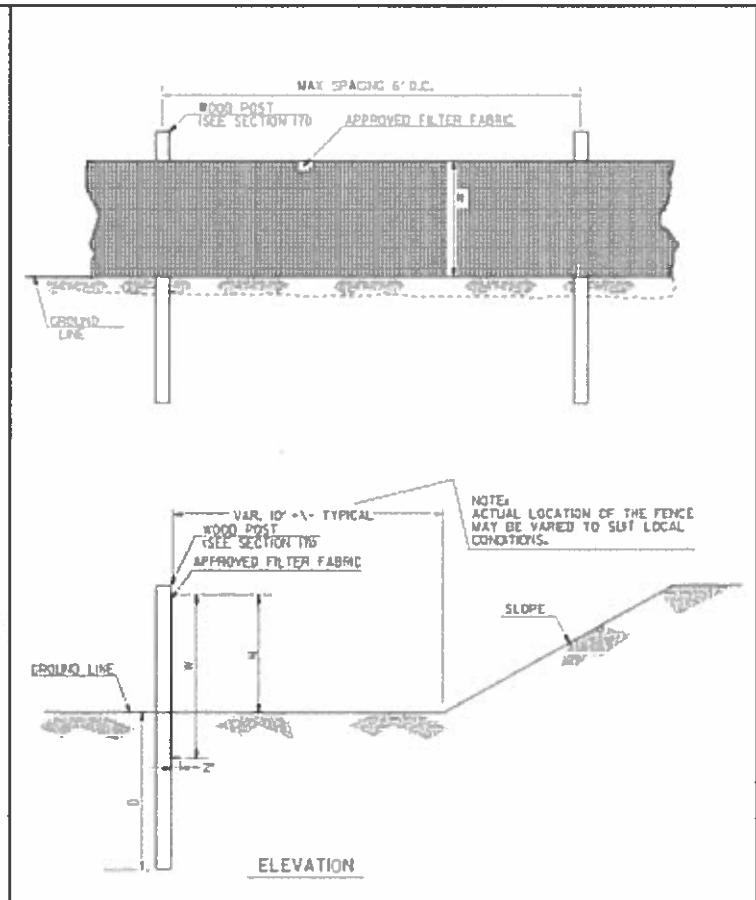

SINGLE ROW TYPE A SILT FENCE

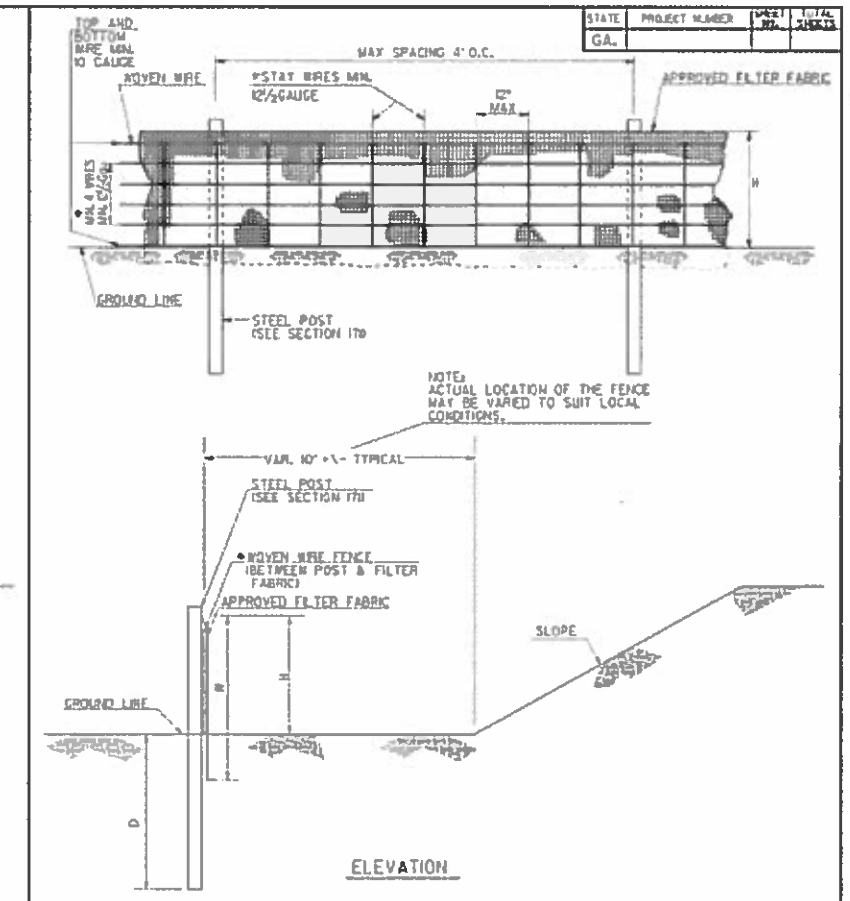

SINGLE ROW TYPE C SILT FENCE WITH WOVEN WIRE SUPPORT

FENCE TYPE	POST LENGTH	H	D	N	TYPICAL USES
TYPE 'A'	4 FT.	2'-4"	1'-6'	3'-0"	
TYPE 'C'	4 FT.	2'-4"	1'-6'	3'-0"	AT BRIDGE END ROLLS, DOUBLE ROW ALONG STREAMS, WETLANDS AND ENVIRONMENTALLY SENSITIVE AREAS FOR USE OF THIS MATERIAL IN FABRIC CHECKDAMS SEE D-240.

NOTES:

1. WIRE STAPLES SHALL BE AT LEAST 17 GAUGE, WITH LEGS AT LEAST ½ INCHES LONG AND A CROWN AT LEAST ¾ INCHES WIDE. NAILS SHALL BE AT LEAST 14 GAUGE, 1 INCH LONG, WITH BUTTON HEADS AT LEAST ¾ INCHES WIDE.
2. NAILS OR STAPLES SHALL BE EVENLY PLACED WITH AT LEAST 5 PER POST FOR TYPE A FENCE AND 4 PER POST FOR TYPE C FENCE.
3. THE VERTICAL WIRES FOR THE WOVEN WIRE SUPPORT FENCE SHALL HAVE A MAXIMUM SPACING OF 12 INCHES. THE TOP AND BOTTOM WIRES SHALL BE AT LEAST 10 GAUGE AND ALL OTHER WIRES SHALL BE AT LEAST 12½ GAUGE.
4. TEMPORARY SILT FENCE INSTALLATION IS DIFFERENT THAN THE SILT RETENTION BARRIER INSTALLATION.
5. SEE SECTION 171 FOR SILT FENCE SPECIFICATIONS.
6. SEE SECTION 894 FOR FENCING SPECIFICATIONS.
7. SEE DPL-36 FOR A LIST APPROVED SILT FENCE FABRIC.
8. TEMPORARY SILT FENCE SHALL NOT BE PLACED WITHIN STATE WATERS UNLESS PERMITTED.

	DATE	DEPARTMENT OF TRANSPORTATION STATE OF GEORGIA
	REVISION	CONSTRUCTION DETAILS TEMPORARY SILT FENCE
	BY	NO SCALE — REV. AND REDRAWN JAN. 2011 — NUMBER D-24A — SHEET 1 OF 4

AECOM

REVISION DATES		

DEKALB COUNTY
DEPARTMENT OF TRANSPORTATION

EROSION CONTROL
CONSTRUCTION DETAILS

CONSTITUTION ROAD AND KEY ROAD
BRIDGES OVER INTRENCHMENT CREEK

DRAWING NO. 56-001

COUNTY	PROJECT NUMBER	SHEET NO.	TOTAL SHEETS
DEKALB	0012613		13

STATE	PROJECT NUMBER	SHEET NO.	TOTAL SHEETS

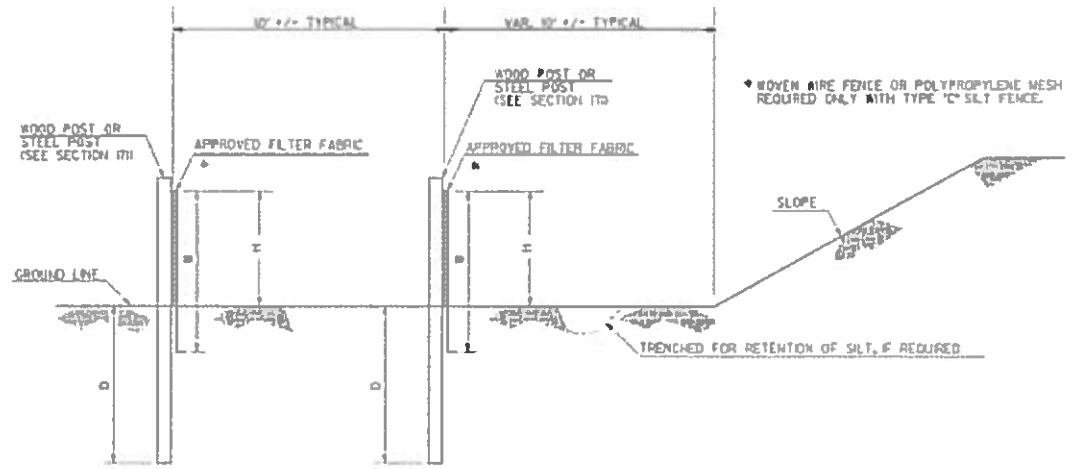

ELEVATION

DOUBLE ROW SILT FENCE

FENCE TYPE	POST LENGTH	H	D	W	TYPICAL USES
TYPE "A"	4 FT.	2'-4"	1'-6"	3'-0"	
TYPE "C"	4 FT.	2'-4"	1'-6"	3'-0"	AT BRIDGE END ROLLS, DOUBLE ROW ALONG STREAMS, WETLANDS AND ENVIRONMENTALLY SENSITIVE AREAS FOR USE OF THIS MATERIAL IN FABRIC CHECKDAMS SEE D-24D.

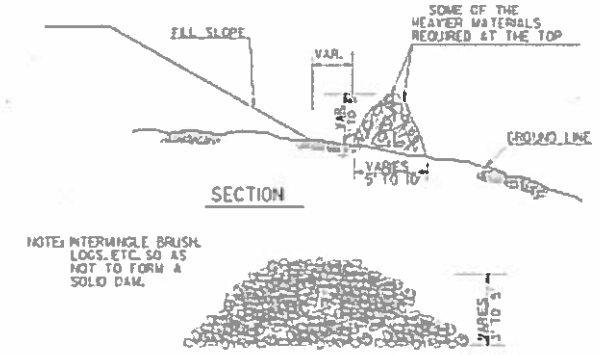

FRONT VIEW

NOTE: BRUSH BARRIER(S) WILL BE INCLUDED IN PAYMENT FOR CLEARING & GRUBBING.

BRUSH BARRIER DETAILS

(FOR USE IN RURAL AREAS)

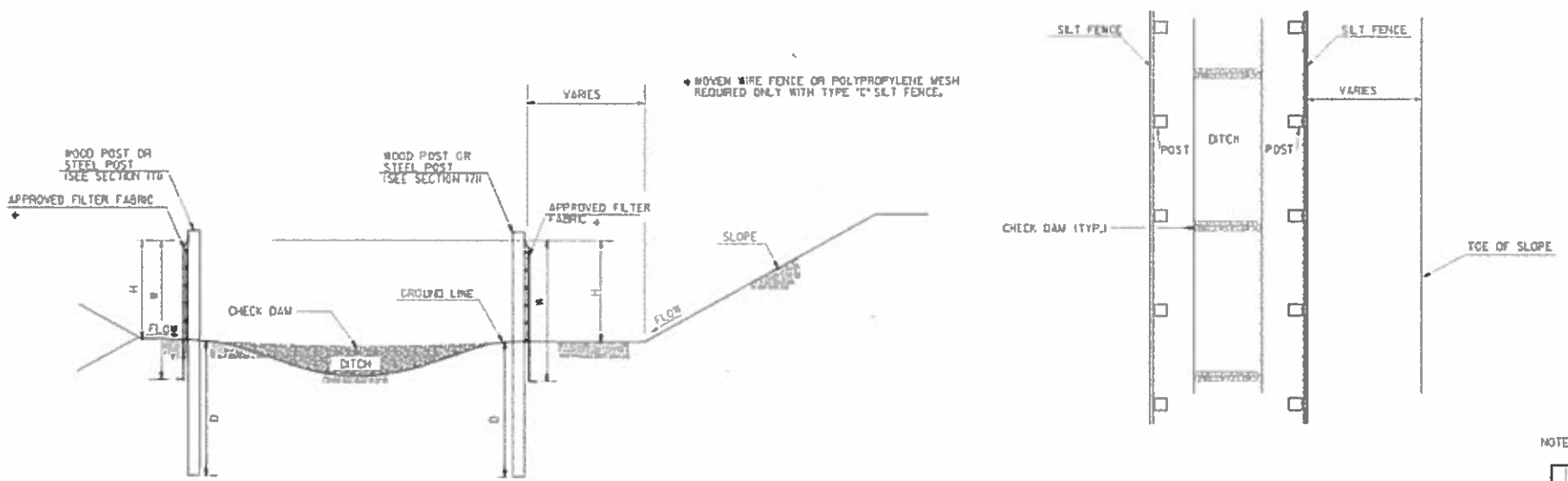

ELEVATION

PLAN

NOTE: TEMPORARY SILT FENCE SHALL NOT BE PLACED WITHIN STATE WATERS.

FENCE TYPE	POST LENGTH	H	D	W	TYPICAL USES
TYPE "A"	4 FT.	2'-4"	1'-6"	3'-0"	
TYPE "C"	4 FT.	2'-4"	1'-6"	3'-0"	AT BRIDGE END ROLLS, DOUBLE ROW ALONG STREAMS, WETLANDS AND ENVIRONMENTALLY SENSITIVE AREAS FOR USE OF THIS MATERIAL IN FABRIC CHECKDAMS SEE D-24D.

SILT FENCE

PERIMETER INSTALLATION ALONG DITCH SECTION

REVISION	DATE	

DEPARTMENT OF TRANSPORTATION
STATE OF GEORGIA

CONSTRUCTION DETAILS

TEMPORARY SILT FENCE

BERM DITCH, INSTALLATION, BRUSH BARRIER

NO SCALE REV. AND REDRAWN JAN. 2011

NUMBER D-24B (SHEET 2 OF 4)

AECOM

REVISION DATES		

DEKALB COUNTY
DEPARTMENT OF TRANSPORTATION

EROSION CONTROL
CONSTRUCTION DETAILS

CONSTITUTION ROAD AND KEY ROAD
BRIDGES OVER INTRENCHMENT CREEK

DRAWING No. 56-002

12/16/2015 9:19:51 AM
brayl
gplotborder-V81-PO.tbl
07-9007177B-copy.dgn

COUNTY	PROJECT NUMBER	SHEET NO.	TOTAL SHEETS
DEKALB	0012613		73

STATE	PROJECT NUMBER	SHEET NO.	TOTAL SHEETS
GA.			

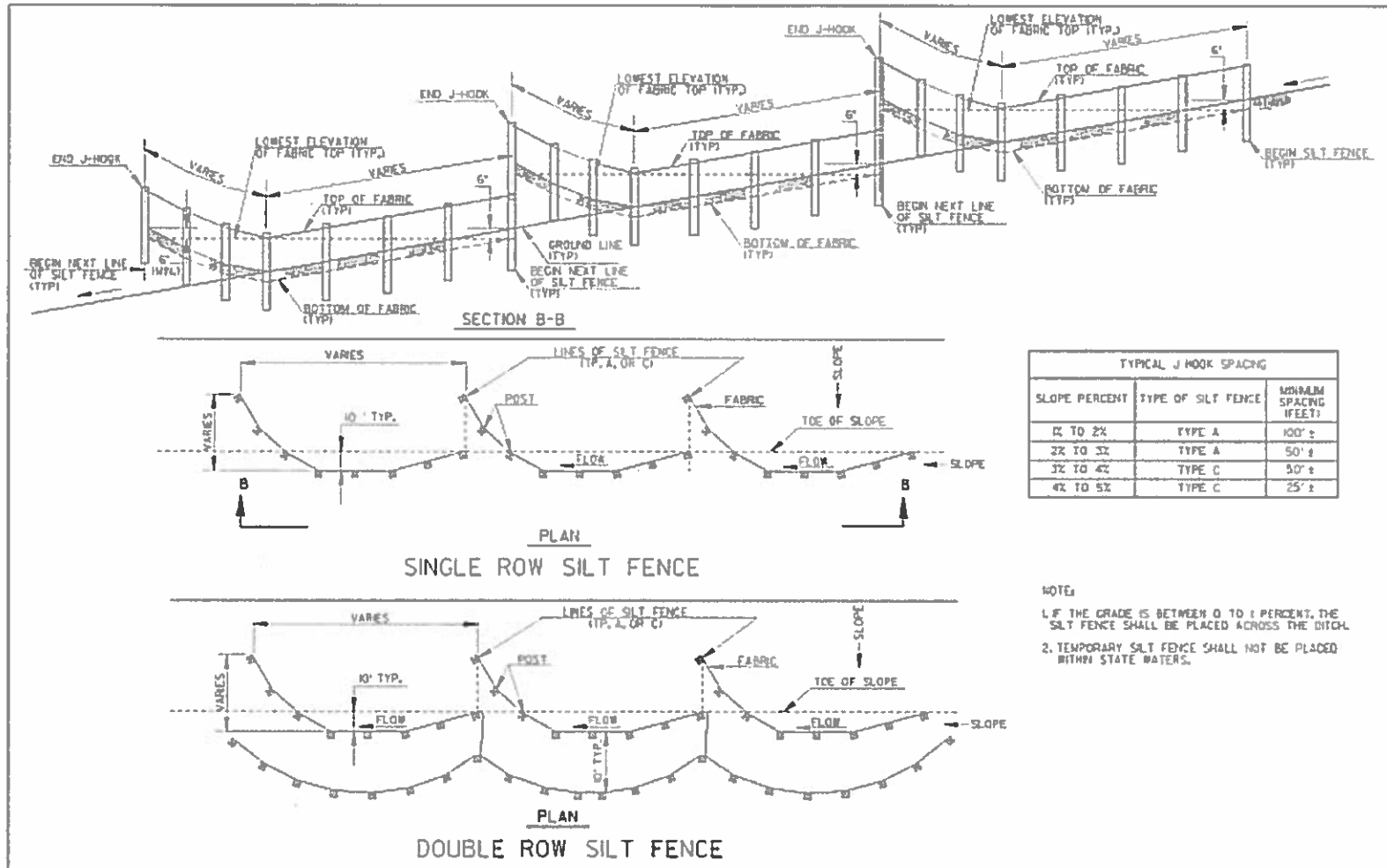

TYPICAL J HOOK SPACING		
SLOPE PERCENT	TYPE OF SILT FENCE	MINIMUM SPACING (FEET)
0% TO 2%	TYPE A	100' ±
2% TO 3%	TYPE A	50' ±
3% TO 4%	TYPE C	50' ±
4% TO 5%	TYPE C	25' ±

NOTE:
1. IF THE GRADE IS BETWEEN 0 TO 1 PERCENT, THE SILT FENCE SHALL BE PLACED ACROSS THE DITCH.
2. TEMPORARY SILT FENCE SHALL NOT BE PLACED WITHIN STATE WATERS.

TYPICAL LOCATION AROUND DROP INLETS

ALT. TO PREFABRICATED INLET SEDIMENT TRAP FOR AREAS WITH SLOPES ≤ 5%

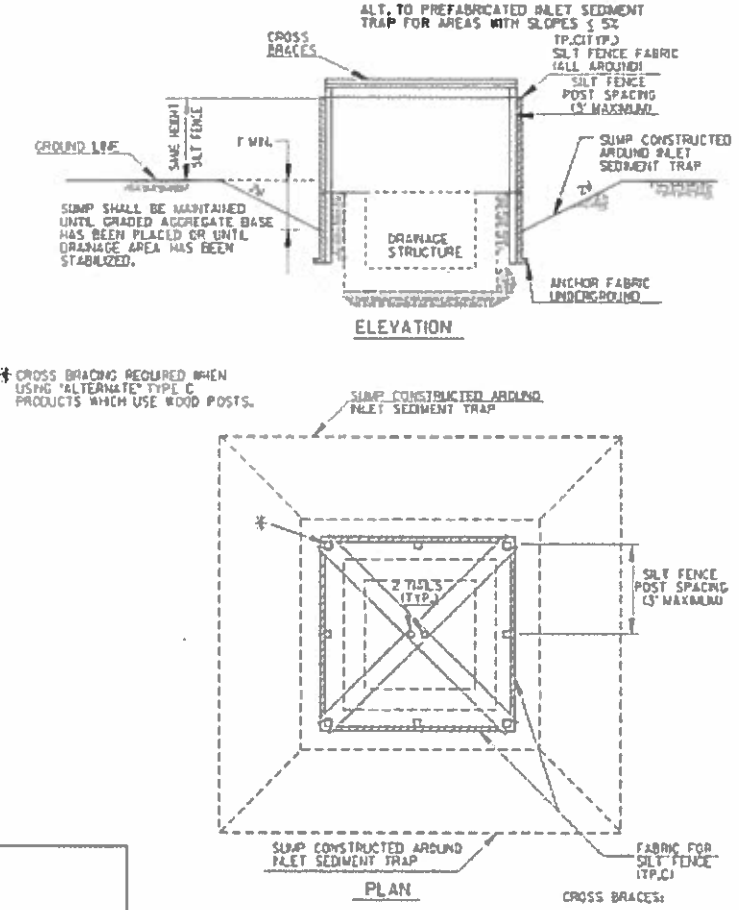

* CROSS BRACING REQUIRED WHEN USING "ALTERNATE" TYPE C PRODUCTS WHICH USE WOOD POSTS.

CROSS BRACES:
TWO - 2 X 4'S WITH ENDS TO FIT POST, PROVIDING STURDY SUPPORT, OR AN APPROVED ALTERNATE

NOTE:
PAYMENT AS INLET SEDIMENT TRAP PER EACH.

NOTE:
SEE SEPARATE SHEET ENTITLED "TEMPORARY SILT FENCE DETAILS" FOR SILT FENCE ERECTION DETAILS.

NOTE:
THE DRAINAGE AREA ENTERING THE INLET SEDIMENT TRAP SHALL BE NO GREATER THAN ONE ACRE.

TYPICAL CONSTRUCTION SEQUENCE FOR INLET SEDIMENT TRAP ALTERNATE

1. EXCAVATE APPROXIMATELY 4" TO 6" BELOW THE TOP OF THE INLET STRUCTURE.
2. PLACE THE FRAME ONTO THE INLET STRUCTURE, ENSURING PROPER SEATING OF FRAME TO STRUCTURE.
3. SLIDE THE FILTER OVER THE FRAME.
4. FILL THE FILTER POCKETS WITH SOIL, #57 GRAVEL OR EQUIVALENT. THE FILTER POCKETS SHOULD BE COMPLETELY FILLED TO ENSURE A GOOD SEAL BETWEEN THE GROUND AND INLET STRUCTURE.
5. BACK FILL AROUND THE FRAME AND FILTER ASSEMBLY IS NOT REQUIRED TO COMPLETE INSTALLATION; HOWEVER, BACK FILLING MAY BE NECESSARY TO COMPLETE EXCAVATION REQUIREMENTS FOR THE SITE.

NOTE:
INLET SEDIMENT TRAP ALTERNATE SHALL BE AS APPROVED BY THE GA. D.O.T. OFFICE OF MATERIALS & RESEARCH. DETAILS & SPECIFICATIONS NOT SHOWN ARE PER THE MANUFACTURER'S REQUIREMENTS.

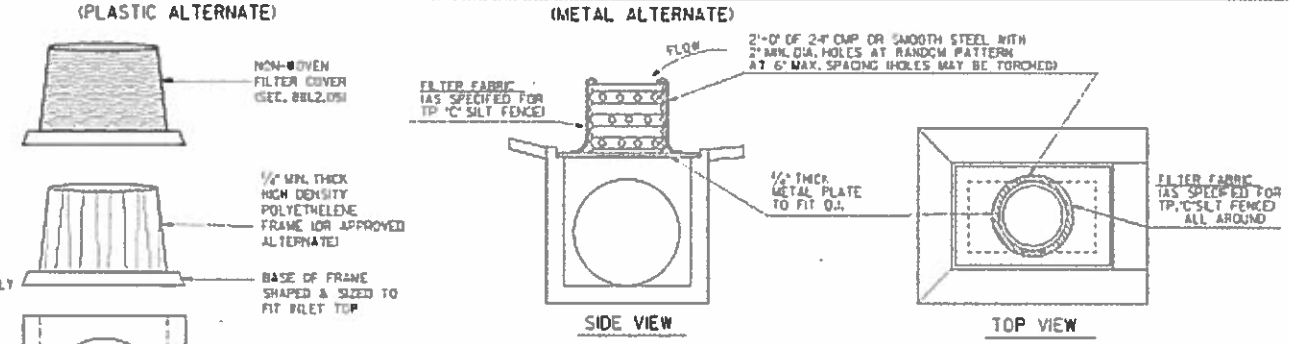

NOTE: WHERE INLET SEDIMENT TRAPS ARE SPECIFIED, EITHER THE PLASTIC ALTERNATE (LEFT) OR THE METAL ALTERNATE (RIGHT) MAY BE USED AS APPROVED BY THE ENGINEER.

NOTE:
INLET SEDIMENT TRAP AND INLET TO BE BUILT CONTINUOUS WITH PIPE

NOTE:
PAYMENT AS INLET SEDIMENT TRAP PER EACH

NOTE: SEE SEPARATE DETAILS FOR SILT FENCE AROUND DROP INLETS.

INLET SEDIMENT TRAP - FOR DROP INLETS

DATE	REVISIONS	BY

DEPARTMENT OF TRANSPORTATION
STATE OF GEORGIA

CONSTRUCTION DETAILS
TEMPORARY SILT FENCE
J-HOOK, INLET SEDIMENT TRAPS

NO SCALE JANUARY 2011

NUMBER D-24C
SHEET 3 OF 4

AECOM

REVISION DATES		

DEKALB COUNTY
DEPARTMENT OF TRANSPORTATION

EROSION CONTROL
CONSTRUCTION DETAILS

CONSTITUTION ROAD AND KEY ROAD
BRIDGES OVER INTRENCHMENT CREEK

DRAWING NO. 56-003

COUNTY	PROJECT NUMBER	SHEET NO.	TOTAL SHEETS
DEKALB	0012613		73

STATE	PROJECT NUMBER	SHEET NO.	TOTAL SHEETS
GA.			

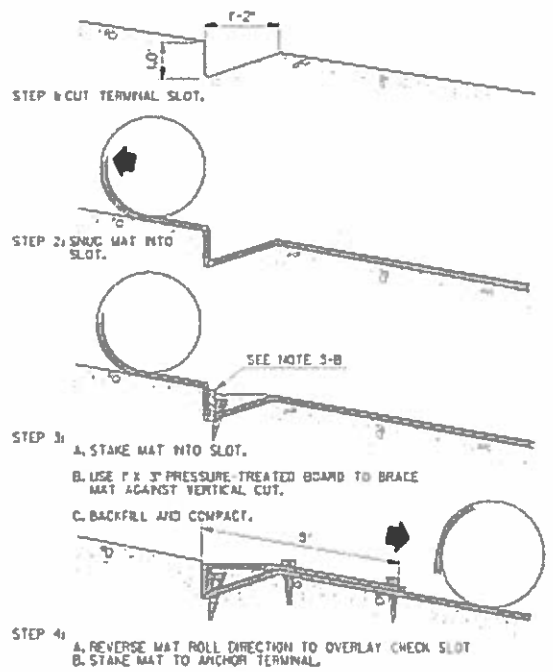

UPSTREAM TERMINAL

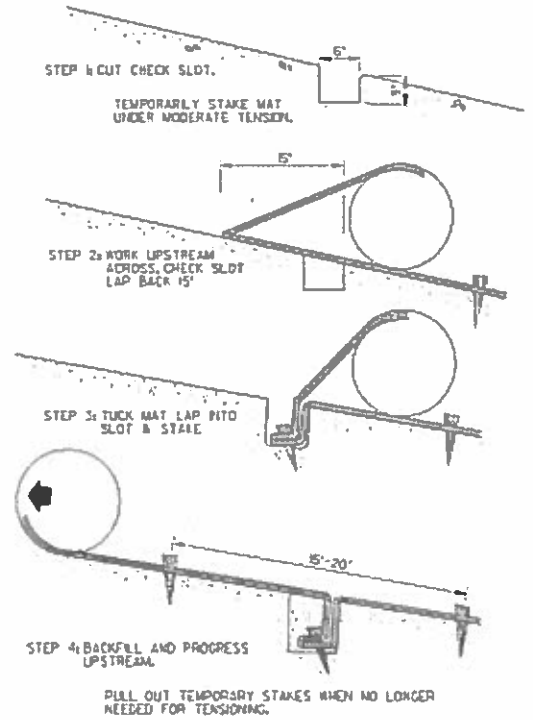

TRANSVERSE CHECK SLOT

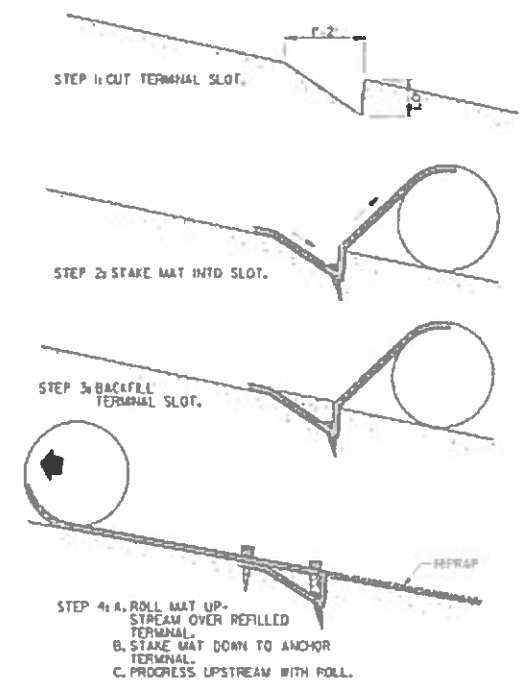

DOWNSTREAM TERMINAL

METAL MATTING - BLANKET STAPLE

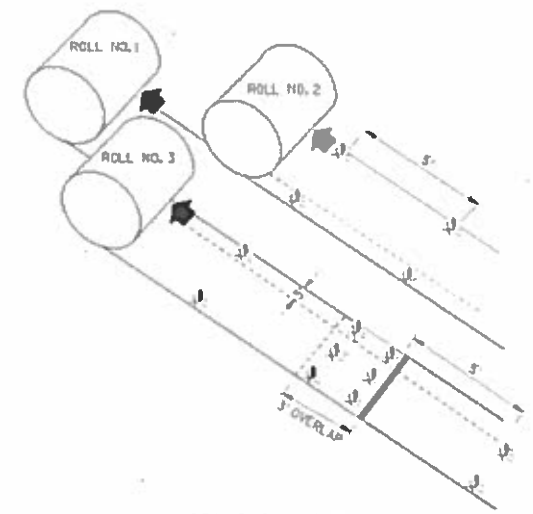

SEQUENTIAL ROLL RUN OUT IN CHANNELS

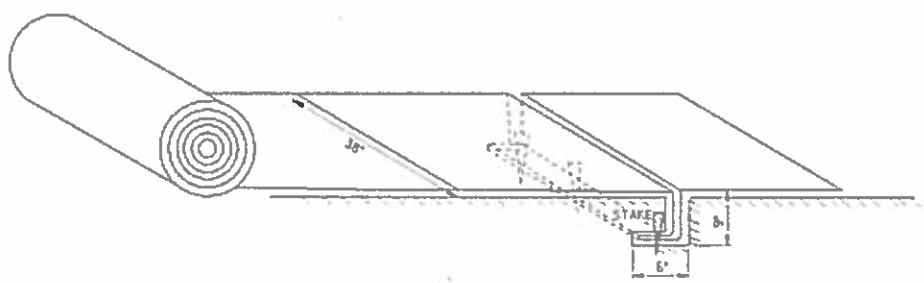

PICTORAL VIEW OF TRANSVERSE SLOT

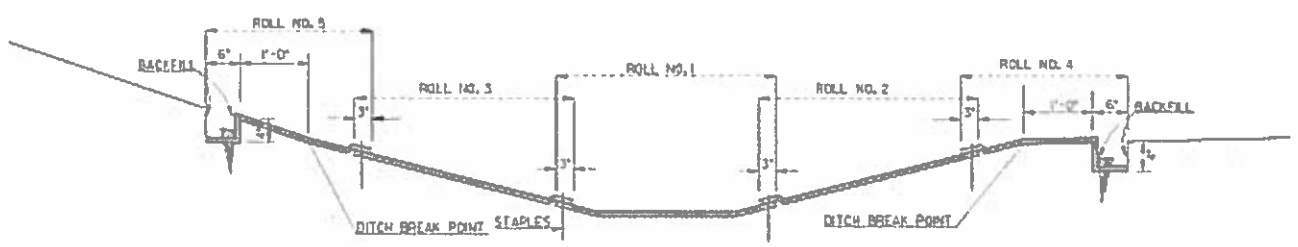

DITCH SECTION

NOTE: MAT TO BE PLACED ONE FEET ABOVE DITCH BREAK POINT OR ONE FOOT ABOVE THE 25 YEAR STORM.

GENERAL NOTES

1. INSTALLATION TO BE DONE AS PER MANUFACTURER'S RECOMMENDATIONS.
2. START AT DOWNSTREAM TERMINAL AND PROGRESS UPSTREAM.
3. FIRST ROLL IS CENTERED LONGITUDINALLY IN MID CHANNEL AND PINNED WITH TEMPORARY STAKES TO MAINTAIN ALIGNMENT.
4. SUBSEQUENT ROLLS FOLLOW IN STAGGERED SEQUENCE BEHIND FIRST ROLL. USE CENTER ROLL FOR ALIGNMENT TO CHANNEL CENTER.
5. WORK OUTWARDS FROM CHANNEL CENTER TO EDGE.
6. USE 3" OVERLAP AND STAKE AT 5' INTERVAL ALONG SEAMS.
7. USE 3' OVERLAPS AND SHINGLE DOWNSTREAM TO CONNECT LINING AT ROLL ENDS.
8. METAL STAPLES MAY BE USED IN LIEU OF WOODEN STAKES.

REVISION	BY	DATE
REVISED SHEET LAYOUT & ADDED DITCH SECTION. ADDED METAL STAPLE.	T.P.C.	7-5-11

DEPARTMENT OF TRANSPORTATION
STATE OF GEORGIA

CONSTRUCTION DETAILS
PERMANENT SOIL REINFORCING MAT
(TURF REINFORCING MATS)
INSTALLATION ON DITCHES

NO SCALE — AUGUST 1988

Designed ____
Drawn ____
Traced ____
Checked ____

NUMBER D-35

AECOM

REVISION DATES		

DEKALB COUNTY
DEPARTMENT OF TRANSPORTATION

EROSION CONTROL
CONSTRUCTION DETAILS

CONSTITUTION ROAD AND KEY ROAD
BRIDGES OVER INTRENCHMENT CREEK

DRAWING NO. 56-004

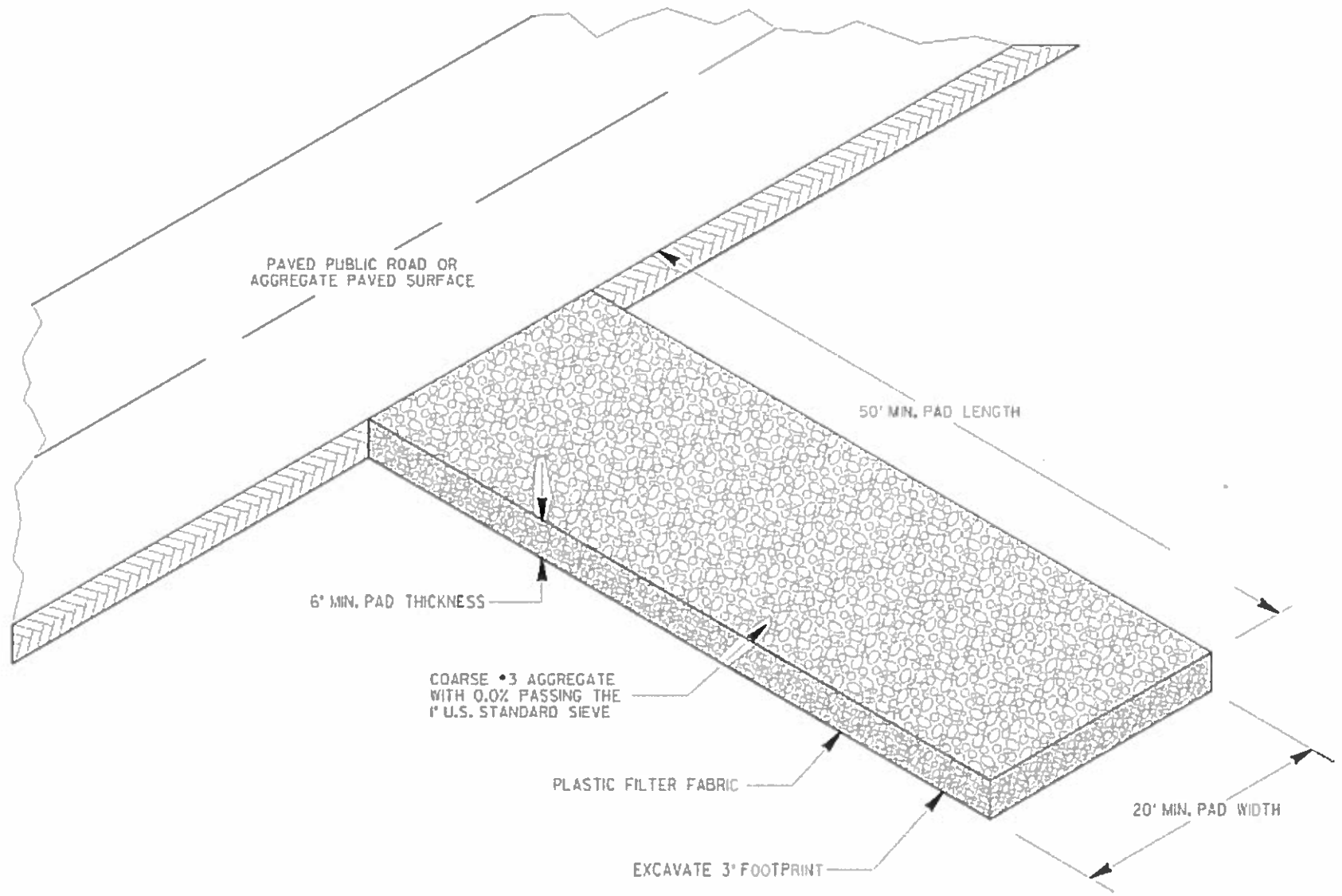

NOTES:
1) STONE AGGREGATE SHALL BE KEPT LOOSE OR SCARIFIED WHEN AGGREGATE BECOMES CONSOLIDATED.
2) CONSTRUCTION EXITS ARE NOT REQUIRED FOR DIRT PUBLIC ROADS.

MAINTENANCE

THE EXIT SHALL BE MAINTAINED IN A CONDITION WHICH WILL PREVENT TRACKING OR FLOW OF MUD ONTO PUBLIC RIGHTS-OF-WAY. THIS MAY REQUIRE PERIODIC TOP DRESSING WITH COARSE #3 AGGREGATE, AS CONDITIONS DEMAND, AND REPAIR AND/OR CLEANOUT OF ANY STRUCTURES TO TRAP SEDIMENT. ALL MUD AND DEBRIS SPILLED, DROPPED, WASHED, OR TRACKED FROM VEHICLES OR SITE ONTO ROADWAYS OR INTO STORM DRAINS MUST BE REMOVED IMMEDIATELY.

PAY ITEM: 163-0300__CONSTRUCTION EXIT___EACH

DATE / REVISIONS / INITIALS	DEPARTMENT OF TRANSPORTATION STATE OF GEORGIA	
	CONSTRUCTION DETAILS CONSTRUCTION EXIT NO SCALE — FEBRUARY 2001	
INIT. / BY		NUMBER D-41

AECOM

REVISION DATES	

DEKALB COUNTY
DEPARTMENT OF TRANSPORTATION

EROSION CONTROL
CONSTRUCTION DETAILS

CONSTITUTION ROAD AND KEY ROAD
BRIDGES OVER INTRENCHMENT CREEK

DRAWING NO. 56-005