NOTES:

1. THERE ARE NO APPARENT HISTORIC RESOURCES OR SIGNIFICANT NATURAL FEATURES ON THIS PROPERTY.

2. A MANDATORY HOME OWNER'S ASSOCIATION AGREEMENTS PROVIDING FOR MAINTENANACE OF A COMMON PRIVATE DRIVEWAY SERVING LOTS 1-13.

3. A 75' TRIBUTARY BUFFER WILL BE MAINTAINED ON ALL STATE WATERS THAT ARE NOT APPROVED FOR A BUFFER ENCROACHMENT VARIANCE BY GA. E.P.D.

4. SKETCH PLAT APPROVAL DOES NOT CONSTITUTE APPROVAL OF THE STORM DRAINAGE OR SANITARY SYSTEMS. NO CONSTRUCTION SHALL BEGIN UNTIL CONSTRUCTION PLANS ARE APPROVED AND A DEVELOPMENT PERMIT IS OBTAINED.

5. WATER OF THE UNITED STATES, INCLUDING THE LAKES AND ADJACENT WETLANDS, SHOWN ON THE PLAT ARE JURISDICTION OF THE ARMY CORPS OF ENGINEERS. LOT OWNERS ARE SUBJECT TO PENALTY BY LAW FOR DISTURBANCE TO THESE WETLAND AREAS WITH PROPER AUTHORIZATION.

6. SANITARY SEWER SERVICES WILL BE PROVIDED BY DEKALB COUNTY. WATER WILL BE PROVIDED BY DEKALB COUNTY.

7. THE ELECTRIC SERVICE FOR THIS SITE WILL BE UNDERGROUND.

8. SURVEY FOR THIS PROPERTY WAS PERFORMED BY GRANT SHEPHERD & ASSOCIATES, INC., AND DATED FEBRUARY 3.

9. TOPOGRAPHIC SURVEY WAS PREPARED FROM A GROUND RUN SURVEY BY GRANT SHEPHERD & ASSOCIATES, INC.

10. INERT LANDFILLS OR THE BURYING OF CONSTRUCTION DEBRIS, TREE STUMPS AND TOPS, OR ANY OTHER REFUSE IS PROHIBITED EXCEPT IN M-2 INDUSTRIAL DISTRICT PER LAND DEVELOPMENT ORDINANCE CHAPTER 14, ARTICLE II, SECTION 14-37 (B)(6)

11. STREET LIGHT WILL BE PROVIDED BY OWNER/DEVELOPER IN ACCORDANCE WITH DEKALB COUNTY STANDARDS.

12. 12% MAX. STREET GRADES FOR LOCAL RESIDENT.

13. ALL SLOPES MUST NOT EXCEED 3H:1V

14. THERE IS NO PRESENCE OF WETLANDS.

15. LOTS THAT WILL REQUIRE FILL DEPTH OF 2' OR GRATER BETWEEN THE RIGHT-OF-WAY AND REAR BUILDING LINE AT THE TIME OF FUTURE LOT GRADING WILL REQUIRE A COMPACTION CERTIFICATE SEALED BY A REGISTERED GEOTECHNICAL ENGINEER TO BE SUBMITTED AT THE TIME OF BUILDING PERMIT APPLICATION.

16. SOIL TYPE: CuC - 1.0 ACRES 26.6% PuE - 2.8 ACRES 73.4%

17. SPEED LIMIT: 35 MPH

SITE DATA:

ORIGINAL PARCEL AREA: 2.56+/- ACRES

ZONED: R-75 SCOTTDALE
OVERLAY TIER II, CENTRAL

MINIMUM LOT SIZE: 5,000 SQ.FT.
MIN. LOT WIDTH 50.0'
MIN. FRONT YARD: 30'
MAX. BLDG. HEIGHT: 28.0'
MIN. SIDE YARD: 7.5' (15' CORNER)
MIN. REAR YARD: 30.0'

PROPOSED NUMBER OF LOTS: 13

PROPOSED DENSITY: 5.07 UNITS PER ACRE

TREE PRESERVATION 120 INCHES PER ACRE
120 * 2.56 = 307 INCHES REQ.

OWNER: JACOB HAYUT - # 404-513-5553

DEVELOPER: JACOB HAYUT - # 404-513-5553

DESIGNER: GRANT SHEPHERD & ASSOCIATES, INC.
735 LONGLEAF BOULEVARD, SUITE A
LAWRENCEVILLE, GEORGIA 30046
770-418-9823
CONTACT - WILLIAM G. SHEPHERD

* ALL DESIGN AND CONSTRUCTION FOR WATER, SEWER, FIRE LINES, LIFT STATIONS AND BACKFLOW PREVENTION SHALL COMPLY WITH DEKALB COUNTY DEPARTMENT OF WATERSHED MANAGEMENT DESIGN STANDARDS 2009 EDITION, VERSION 1.0. ACTUAL FIELD CONDITIONS COULD DICTATE MORE STRINGENT REQUIREMENTS IF DEEMED NECESSARY BY THE CONSTRUCTION INSPECTOR.

* TO PURCHASE A COPY OF THE DESIGN STANDARDS, PLEASE CALL (770) 414-2383 OR (770) 621-7272.

* DEVELOPER SHALL PROVIDE RECORD DRAWINGS "AS-BUILT" PLANS AND "FINAL PLATS" (IF APPLICABLE) IN HARD COPY AND ELECTRONIC (AUTOCAD OR MICROSTATION FORMAT), AS WELL AS RECORD ALL EASEMENTS THAT WILL BE DEDICATED TO DEKALB COUNTY IN THE COURT HOUSE, PRIOR TO APPROVAL OF AS-BUILT PLANS.

* FIRE LINES, F.O.G., BACKFLOW PREVENTION, AND LIFT STATIONS REQUIRE A SEPARATE REVIEW.

* F.O.G. COMPLIANCE (GREASE TRAP) REVIEW & APPROVAL - CALL (404) 687-7150 OR (404) 687-7157.

* PROJECTS INVOLVING CONSTRUCTION OF TOWN HOMES AND/OR CONDOMINIUMS ARE REQUIRED TO HAVE INDIVIDUAL METERS FOR EACH UNIT.

* FIELD CHANGES DURING CONSTRUCTION MUST BE SUBMITTED FOR REVIEW & APPROVAL BY THE COUNTY ENGINEER.

* FOR PROJECTS WITHIN CITIES, DEVELOPER SHALL PROVIDE A MAINTENANCE BOND TO DEKALB COUNTY FOR WATERSHED UTILITIES PRIOR TO APPROVAL OF AS-BUILT PLANS.

* CONTRACTOR MUST JET CLEAN & TV SANITARY SEWER LINES AFTER CONNECTIONS ARE MADE TO THE EXISTING SEWER TIE-IN POINTS. TRACER WIRE TO BE INSTALLED OVER NON FERROUS/PVC PIPES.

* CONTRACTOR MUST NOTIFY WATER & SEWER CONSTRUCTION INSPECTOR AT LEAST 72 HOURS PRIOR TO COMMENCING CONSTRUCTION ACTIVITIES.

* WATER & SEWER CONSTRUCTION INSPECTOR:
M. McGUIRE
(404) 687-4060

* RECORDED OFF-SITE SEWER EASEMENT REQUIRED PRIOR TO ISSUANCE OD DEVELOPMENT PERMIT.

* A 75' TRIBUTARY BUFFER WILL BE MAINTAINED ON ALL STATE WATERS THAT ARE NOT APPROVED FOR A BUFFER ENCROACHMENT VARIANCE BY DEKALB COUNTY OF GA. E.P.D.

* SKETCH PLAT APPROVAL DOES NOT CONSTITUTE APPROVAL OF THE STORM DRAINAGE OR SANITARY SEWER SYSTEMS. NO CONSTRUCTION SHALL BEGIN UNTIL CONSTRUCTION PLANS ARE APPROVED AND DEVELOPMENT PERMIT IS OBTAINED.

* R-75 ZONING DISTRICT 18 PRINCIPLE USES AND STRUCTURE, ACCESSORY USES, BUILDINGS AND STRUCTURES, SPECIAL PERMITS, LOT WIDTH, LOT AREA, SETBACKS, BUILDING SPACING, TRANSITIONAL BUFFER ZONE, BUILDING HEIGHT, FLOOR AREA, LOT COVERAGE, OFF-STREET PARKING REQUIREMENT, LANDSCAPE REQUIREMENT, PARKING LOT LANDSCAPE REQUIREMENT.

* SCOTTDALE, TIER II OVERLAY DISTRICT. DISTRICT BOUNDARIES. APPLICABILITY OF REGULATIONS, USE RESTRICTIONS, HAZARD MARKING/ LIGHTING, PRINCIPLE USE / STRUCTURES, ACCESSORY USE / STRUCTURES, LOT COVERAGE, CLEARING AND GRADING OF LOT, HEIGHT LIMITATION, TREE REMOVAL / REPLACEMENT, PROTECTION OF STEEP SLOPES, DRIVEWAY, CONSERVATION EASEMENT, LIGHTING, DENSITY BONUS

OWNERSHIP:

OHM AVENUE, LLC, 6595 ROSWELL ROAD, SUITE G17340 ATLANTA, GA 30328

24 HOUR EMERGENCY CONTACT
JACOB HAYUT
PHONE:404-513-5553
EMAIL:JACOBHAYU12@GMAIL.COM

1. ALL IMPERVIOUS AREAS SHALL BE TREATED ON-SITE PRIOR TO DISCHARGE INTO RECEIVING STREAMS. A BMP PERFORMANCE REVIEW TOOL SHEET SHALL BE SUBMITTED FOR EACH BASIN WITHIN THE PROJECT. NO POLLUTION BY-PASS IS PERMITTED.

2. IF THERE ARE EXISTING FLOODPLIANS ON SITE AND/OR OPEN DRAINAGE SYSTEMS WITH A TRIBUTARY AREA EQUAL TO OR GREATER THAN 100-ACRES, THEN IN HED-RAS STUDY IS REQUIRED BASED ON THE "BUILT-OUT" CONDITION OF THE BASIN.

3. ALL STORMWATER FEATURES AND BMP'S INCLUDING DETENTION PONDS SHALL BE DESIGNED ACCORDING TO THE GEORGIA STORMWATER MANAGEMENT MANUAL.

4. ALL WATER QUALITY SHALL BE TREATED ON EACH LOT VIA INFILTRATION TRENCHES. ALL ROOF DRAINS SHALL BE PIPED TO TRENCH.

BEST MANAGEMENT PRACTICES (BMP'S)

THE DESIGN CRITERIA FOR THE BMP'S TO TREAT THE RUNOFF FROM THE FIRST 1.2 INCHES OF RAINFALL,FROM THE SITE,WITH A DETENTION TIME OF 48 HOURS. A "DRY EXTENDED DETENTION POND", GRASS SWALES,& INFILTRATION TRENCHES WILL BE UTILIZED TO ACHIEVE THIS RESULT.

THE LAND DISTURBANCE ACTIVITY FOR THIS SITE WILL CONSIST CLEARING & GRADING FOR THE CONSTRUCTION OF ROADS, STORM SEWER AND SANITARY SEWER.

THE TOTAL DISTURBED AREA WILL BE APPROX. 1.35 ACRES. DETENTION PONDS,GRASS SWALES, & INFILTRATION TRENCHES WILL BE UTILIZED TO CONTROL THE POST DEVELOPED STORM WATER RUNOFF. STORM DRAIN OUTLET PROTECTION (SE) & CHECK DAMS WILL BE IMPLEMENTED IN THE GRASS SWALES TO CONTROL SEDIMENT FROM LEAVING THE SITE. SILT FENCES WILL ALSO BE USED ALONG THE BUFFER LINES (DOUBLE ROWS IF NECESSARY). SIDE SLOPES WILL BE GRASSED IMMEDIATELY AFTER GRADING IS COMPLETE.

ROOF DRAINS ON ALL HOMES WILL BE CONNECTED TO AN UNDERGROUND DRAINAGE SYSTEM & TRENCHED WITH PERFORATED PIPE TO INFILTRATION TRENCHES FOR ABSORBTION.

Vicinity Map (NTS)

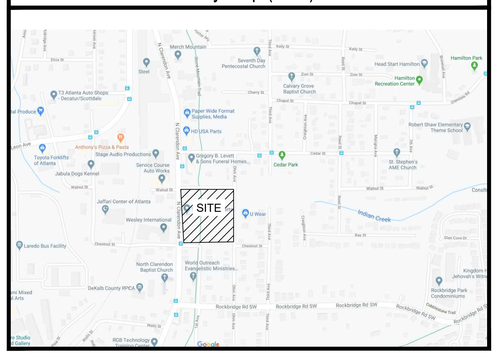

FEMA Notes and Map (NTS)

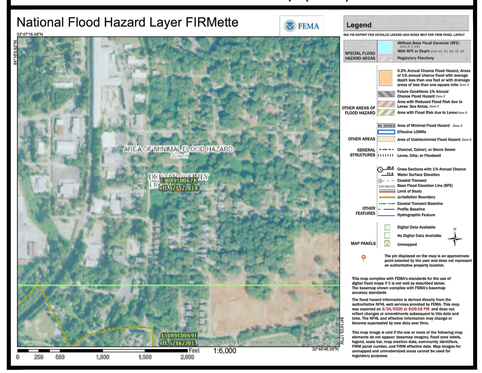

THIS PROPERTY IS / IS NOT LOCATED IN A SPECIAL FLOOD HAZARD AREA BASED ON THE FLOOD INSURANCE RATE MAP FOR THIS AREA. THE MAP NUMBER FOR THIS AREA IS (MAP), CONTAINING A LATEST DATE OF (DATE). THIS DETERMINATION WAS MADE BY GRAPHICALLY DETERMINING THE POSITION OF THE SITE ON SAID FIRM (FEDERAL INSURANCE RATE MAP) MAP UNLESS OTHERWISE NOTED.

RESIDENTIAL LOT AREA TABLE

PARCEL NO.	SQ. FOOTAGE	ACREAGE	PARCEL DESCRIPTION
Lot : 1	6,113 SQ. FT.	0.140 ACRES	SINGLE FAMILY LOT
Lot : 2	5,500 SQ. FT.	0.126 ACRES	SINGLE FAMILY LOT
Lot : 3	5,500 SQ. FT.	0.126 ACRES	SINGLE FAMILY LOT
Lot : 4	5,500 SQ. FT.	0.126 ACRES	SINGLE FAMILY LOT
Lot : 5	5,500 SQ. FT.	0.126 ACRES	SINGLE FAMILY LOT
Lot : 6	5,500 SQ. FT.	0.126 ACRES	SINGLE FAMILY LOT
Lot : 7	6,293 SQ. FT.	0.144 ACRES	SINGLE FAMILY LOT
Lot : 8	6,890 SQ. FT.	0.158 ACRES	SINGLE FAMILY LOT
Lot : 9	6,183 SQ. FT.	0.142 ACRES	SINGLE FAMILY LOT
Lot : 10	6,188 SQ. FT.	0.142 ACRES	SINGLE FAMILY LOT
Lot : 11	6,201 SQ. FT.	0.142 ACRES	SINGLE FAMILY LOT
Lot : 12	6,207 SQ. FT.	0.142 ACRES	SINGLE FAMILY LOT
Lot : 13	6,929 SQ. FT.	0.159 ACRES	SINGLE FAMILY LOT
Open Space : 1	6,780 SQ. FT.	0.156 ACRES	OPEN / RECREATION SPACE
Open Space : 2	7,381 SQ. FT.	0.169 ACRES	OPEN / RECREATION SPACE

SKETCH PLAT:
CHESTNUT TRACE PARK

(PREVIOUSLY APPROVED AS CHESTNUT TRACE PARK AKA OHM AVENUE AP#21723 (PREVIOUS SKETCH PLAT) PID# 18-009-23-001) AP# 1243867

LAND LOT 9, 1ST SECTION 18TH LAND DISTRICT CITY OF AVONDALE ESTATES DEKALB COUNTY, GEORGIA

STATEMENT OF PURPOSE / PROJECT NARRATIVE:

THE PURPOSE OF THIS PLAN IS TO MODIFY A PREVIOUSLY APPROVED SKETCH PLAT AND SUBDIVIDE A VACANT TRACT OF LAND INTO 13 SINGLE FAMILY RESIDENCES. IT IS THE INTENT OF THIS PLAT TO BALANCE DENSITY AND OPEN/RECREATION SPACE AND INCORPORATING COMMUNITY WALKABILITY.

THIS WILL BE ACCOMPLISHED BY SUBDIVIDING THE PARCEL AS SHOWN HEREIN WITH THE CONSTRUCTION OF TWO (2) ROADWAYS, ASSOCIATED INFRASTRUCTURE AND SIDEWALKS. ONE OF THE PROPOSED ROADWAYS LIES WITHIN ESTABLISHED DEDICATED RIGHT-OF-WAY, THE OTHER WILL BE A NEWLY DEDICATED 40' PRIVATE STREET WITH A 15' ACCESS, UTILITY AND LANDSCAPE EASEMENT, AS SHOWN HEREIN.

A HOME-OWNERS ASSOCIATES SHALL BE ESTABLISHED FOR THE PURPOSE OF MAINTENANCE AND PROTECTIVE COVENANTS.

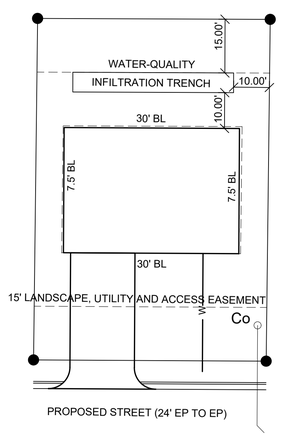

TYPICAL LOT LAYOUT (1"=20')

INDEX OF SHEETS

COVER SHEET	1
EXISTING CONDITIONS	2
DEMOLITION PLAN	3
SITE PLAN	4
GRADING PLAN	5
STRM, SSWR AND PROFILES	6-6.3
EROSION PLANS & DETAIL	7-7.2
LANDSCAPE PLAN	8
DETAILS	9-9.1

GRANT SHEPHERD & ASSOCIATES, INC.
Construction Layout GPS
Modeling
Land Surveying
Site
735 LONGLEAF BOULEVARD, SUITE A, LAWRENCEVILLE, GA 30046
PHONE: 770.418.9823 FAX: 770.418.9289
www.gsasurveying.com
COA/LSF 000459

GEORGIA REGISTERED No. 2136 LAND SURVEYOR Aaron G. Shepherd

SKETCH PLAT
FOR
CHESTNUT TRACE PARK - AKA OHM AVENUE
PROPERTY LOCATED IN
LAND LOT 009 1ST SECTION, 18TH DISTRICT
298 OHM AVENUE AVONDALE
ESTATES, GA 30002
DEKALB COUNTY

COVER SHEET
1" = 40'
Unless Otherwise Noted

GSA Project No.
OHM AVENUE SKETCH

Drawn By / Field Crew
MRS/CW
LD / SANTY 10/22/19

Sheet No. 01 OF 9.1

THE USE OF THIS DOCUMENT FORMAT IS STRICTLY PROHIBITED AND CONTINGENT UPON WRITTEN CONSENT AND PERMISSION OF GRANT SHEPHERD & ASSOCIATES, INC.

Line Table

Line	Direction	Length
L1	S 44°32'50" E	20.05'

Curve Table

Curve	ARC LEN.	Radius	Chord	Direction
C1	18.75'	12.00'	16.90'	S 45°05'20" W

Tree List

ID	Type	Size	ID	Type	Size
1	Pine	20"	12	HW	12"
2	Pine	20"	13	White Oak	29"
3	Pine	16"	14	HW	33"
4	Pine	17"	15	HW	17"
5	Water Oak	19"	16	Red Oak	30"
6	Water Oak	20"	17	Red Oak	30"
7	HW	24"	18	HW	12"
8	HW	17"	19	HW	8"
9	HW	13"			
10	HW	20"			
11	HW	12"			

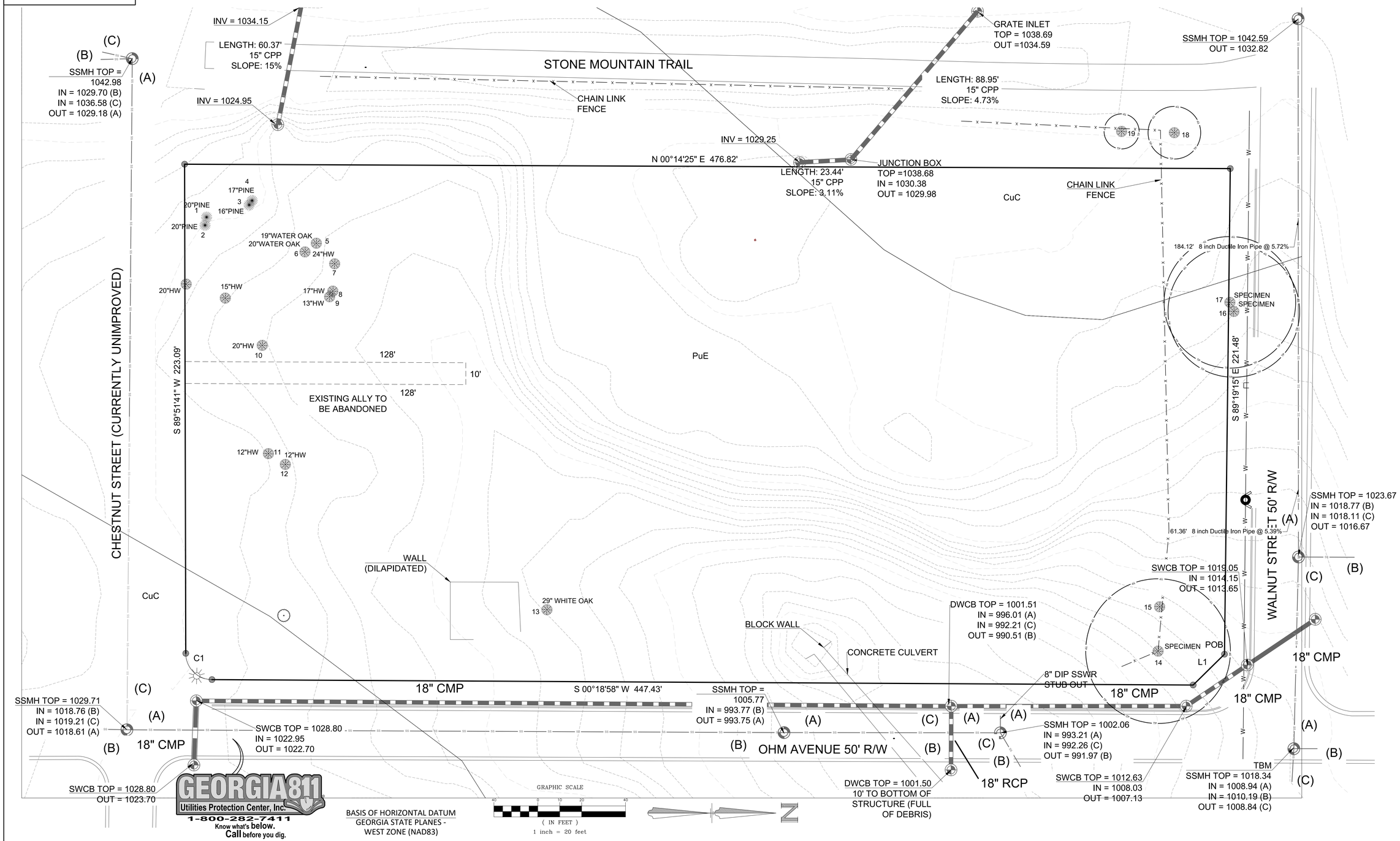

GRANT SHEPHERD & ASSOCIATES, INC.
Construction Layout GPS
Modeling
Land Surveying
Site Development
735 LONGLEAF BOULEVARD SUITE A, LAWRENCEVILLE, GA 30046
PHONE: 770.418.9823 FAX: 770.418.9289
www.gsasurveying.com

COA/LSF 000459

GEORGIA REGISTERED No. 2136 LAND SURVEYOR Aaron G. Shepherd

THE USE OF THIS DOCUMENT FORMAT IS STRICTLY PROHIBITED AND CONTINGENT UPON WRITTEN CONSENT AND PERMISSION OF GRANT SHEPHERD & ASSOCIATES, INC.

SKETCH PLAT
FOR
CHESTNUT TRACE PARK - AKA OHM AVENUE

PROPERTY LOCATED IN
LAND LOT 009 1ST SECTION, 18TH DISTRICT
298 OHM AVENUE AVONDALE
ESTATES, GA 30002
DEKALB COUNTY

EXISTING CONDITION 1" = 20' *Unless Otherwise Noted*	
GSA Project No.	
OHM AVENUE SKETCH	
Drawn By / Field Crew	
	MRS/CW
LD / SANTY	10/22/19
Sheet No.	02 OF 9.1

Z:\Dwg2019\Ohm Ave Concept\953-13-017 Ohm Ave - Concept 3 - sketch plat.dwg

NOTE:
DEKALB COUNTY SANITATION WILL BE RESPONSIBLE FOR HANDLING HOUSEHOLD WASTE, YARD DEBUIS, AND RECYCLABLE MATERIAL
CHARLA SILL
4040-536-0859
SANITATION

Tree List

ID	Type	Size	ID	Type	Size
1	Pine	20"	12	HW	12"
2	Pine	20"	13	White Oak	29"
3	Pine	16"	14	HW	33"
4	Pine	17"	15	HW	17"
5	Water Oak	19"	16	Red Oak	30"
6	Water Oak	20"	17	Red Oak	30"
7	HW	24"	18	HW	12"
8	HW	17"	19	HW	8"
9	HW	13"			
10	HW	20"			
11	HW	12"			

DEKALB COUNTY DEMOLITION NOTES:
1. ALL LAND DISTURBANCE TO BE STABILIZED WITH VEGETATION UPON COMPLETION OF DEMOLITION
2. ALL TREES TO REMAIN AND HAVE PROPER PROTECTION UNLESS APPROVED PLANS INDICATE OTHERWISE
3. ALL DEMOLITION DEBRIS TO BE HAULED OFF SITE
4. DUMPSTERS AND/OR TEMPORARY SANITARY FACILITIES SHALL NOT BE LOCATED IN STREET OR TREE PROTECTION AREA OR RIGHT OF WAY
5. ADDITIONAL EROSION CONTROLS SHALL BE INSTALLED AS DEEMED NECESSARY BY THE ON-SITE INSPECTOR
6. CALL FOR FINAL INSPECTION AT 404-371-4913

NOTES:
1. NO WETLANDS EXIST ON SITE
2. RECEIVING WATERS OF THIS SITE IN INDIAN CREEK
3. EXISTING BURY PIT TO BE REMOVED DURING CONSTRUCTION
4. PROPOSED ELECTRICAL SERVICE WILL BE UNDERGROUND

DEMOLITION LEGEND
ITEM TO BE REMOVED..... X

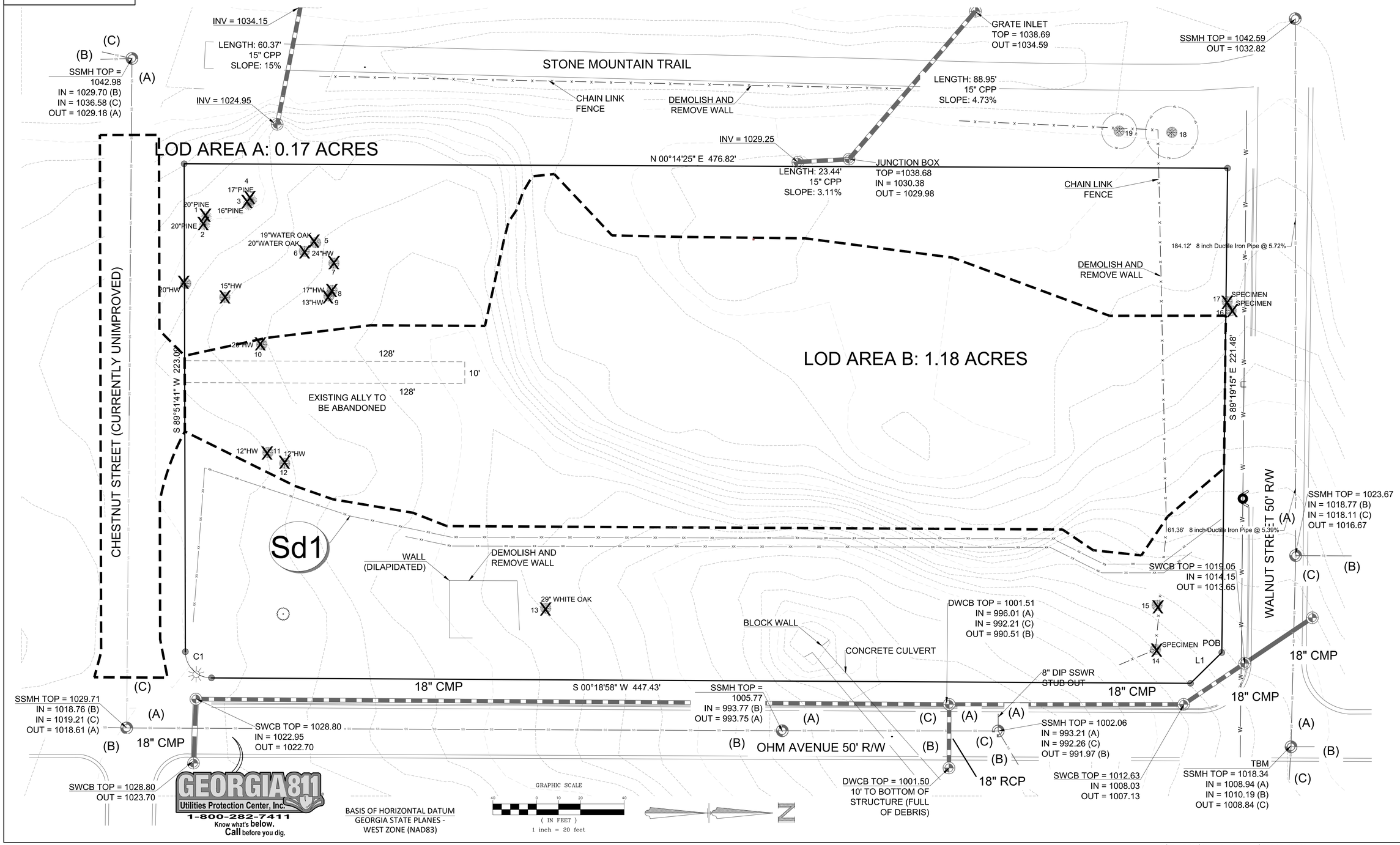

GRANT SHEPHERD & ASSOCIATES, INC.
Construction Layout • Site Modeling • Land Surveying
735 LONGLEAF BOULEVARD SUITE A, LAWRENCEVILLE, GA 30046
PHONE: 770.418.9823 FAX: 770.418.9289
www.gsasurveying.com
COA/LSF 000459

THE USE OF THIS DOCUMENT FORMAT IS STRICTLY PROHIBITED AND CONTINGENT UPON WRITTEN CONSENT AND PERMISSION OF GRANT SHEPHERD & ASSOCIATES, INC.

GEORGIA REGISTERED No. 2136 LAND SURVEYOR Aaron G. Shepherd

SKETCH PLAT
FOR
CHESTNUT TRACE PARK - AKA OHM AVENUE
PROPERTY LOCATED IN
LAND LOT 009 1ST SECTION, 18TH DISTRICT
298 OHM AVENUE AVONDALE ESTATES, GA 30002
DEKALB COUNTY

DEMOLITION PLAN
1" = 20'
Unless Otherwise Noted
GSA Project No.
OHM AVENUE SKETCH
Drawn By / Field Crew
MRS/CW
LD / SANTY 10/22/19
Sheet No. 03 OF 9.1

Z:\Dwg2019\Ohm Ave Concept\953-13-017 Ohm Ave - Concept 3 - sketch plat.dwg

Lot	Tract	Square FT	Acres	Address
1	1	6,113	0.1403	#347 Walnut Street/#324
2	2	5,500	0.1263	#320
3	3	5,500	0.1263	#316
4	4	5,500	0.1263	#304
5	5	5,500	0.1263	#300
6	6	5,500	0.1263	#296
7	7	6,293	0.1445	#292
8	8	6,890	0.1582	#295
9	9	6,183	0.1419	#303
10	10	6,188	0.1421	#311
11	11	6,201	0.1424	#325
12	12	6,207	0.1425	#331
13	13	6,929	0.1591	#341 Walnut Street/#339

POB	S89°19'15"E	S44°32'50"E	S00°18'58"W	N89°44'50"W	N00°18'58"E	
Distance (FT)	85.86	20.05	47.63	100	62.5	
POB	S89°44'50"E	S00°18'58"W	N89°44'50"W	N00°18'58"E		
Distance (FT)	100	55	100	55		
POB	S89°44'50"E	S00°18'58"W	N89°44'50"W	N00°18'58"E		
Distance (FT)	100	55	100	55		
POB	S89°44'50"E	S00°18'58"W	N89°44'50"W	N00°18'58"E		
Distance (FT)	100	55	100	55		
POB	S89°44'50"E	S00°18'58"W	N89°44'50"W	N00°18'58"E		
Distance (FT)	100	55	100	55		
POB	S89°44'50"E	S00°18'58"W	S45°04'42"W	S89°51'41"W		
Distance (FT)	100	50.93	18.76	88.1		
		raduis		12		
POB	S00°18'30"W	S89°51'41"W	N00°14'25"E	N89°51'42"E		
Distance (FT)	72.5	94.99	72.5	95.08		
POB	S00°18'58"W	S89°51'42"W	N00°14'25"E	N89°51'44"E		
Distance (FT)	65	95.08	65	95.16		
POB	S00°18'58"W	S89°51'44"W	N00°14'25"E	N89°51'45"E		
Distance (FT)	65	95.16	65	95.25		
POB	S00°18'58"W	N89°19'11"W	N00°14'25"E	S89°19'12"E		
Distance (FT)	65	95.36	65	95.45		
POB	S00°18'58"W	N89°19'12"W	N00°14'25"E	S89°19'14"E		
Distance (FT)	65	95.45	65	95.53		
POB	S00°18'30"W	N89°19'14"W	N00°14'25"E	S89°19'14"E		
Distance (FT)	72.5	95.53	72.5	95.62		

Open Space	Tract	Square FT	Acres	Address
1	1	6,780	0.1556	#319
Open Space	Tract	Square FT	Acres	Address
2	2	7,381	0.1694	#312

		Address
a.	Lot 1	#347 Walnut Street/#324
b.	Northern Monument Sign	#326
c.	Northern Retaining Wall	#328
d.	Lot 2	#320
e.	Lot 3	#316
f.	Lot 4	#304
g.	Lot 5	#300
h.	Lot 6	#296
i.	Lot 7	#292
j.	Southern Monument Sign	#288
k.	Southern Retaining Wall	#290
l.	Lot 8	#295
m.	Lot 9	#303
n.	Lot 10	#311
o.	Lot 11	#325
p.	Lot 12	#331
q.	Lot 13	#341 Walnut Street/#339
r.	Open Space 1	#319
s.	Open Space 2	#312

POB	S00°19'56"W	S89°51'45"W	N00°14'25"E	S89°19'11"E
Distance (FT)	70.46	95.25	71.82	95.36
POB	S89°44'50"E	S00°18'58"W	N89°41'02"W	N00°18'58"E
Distance (FT)	100	73.87	100	73.76

NOTE:

TYPICAL LOT LAYOUT CAN BE SEEN ON COVER OR BE AVAILABLE UPON REQUEST.

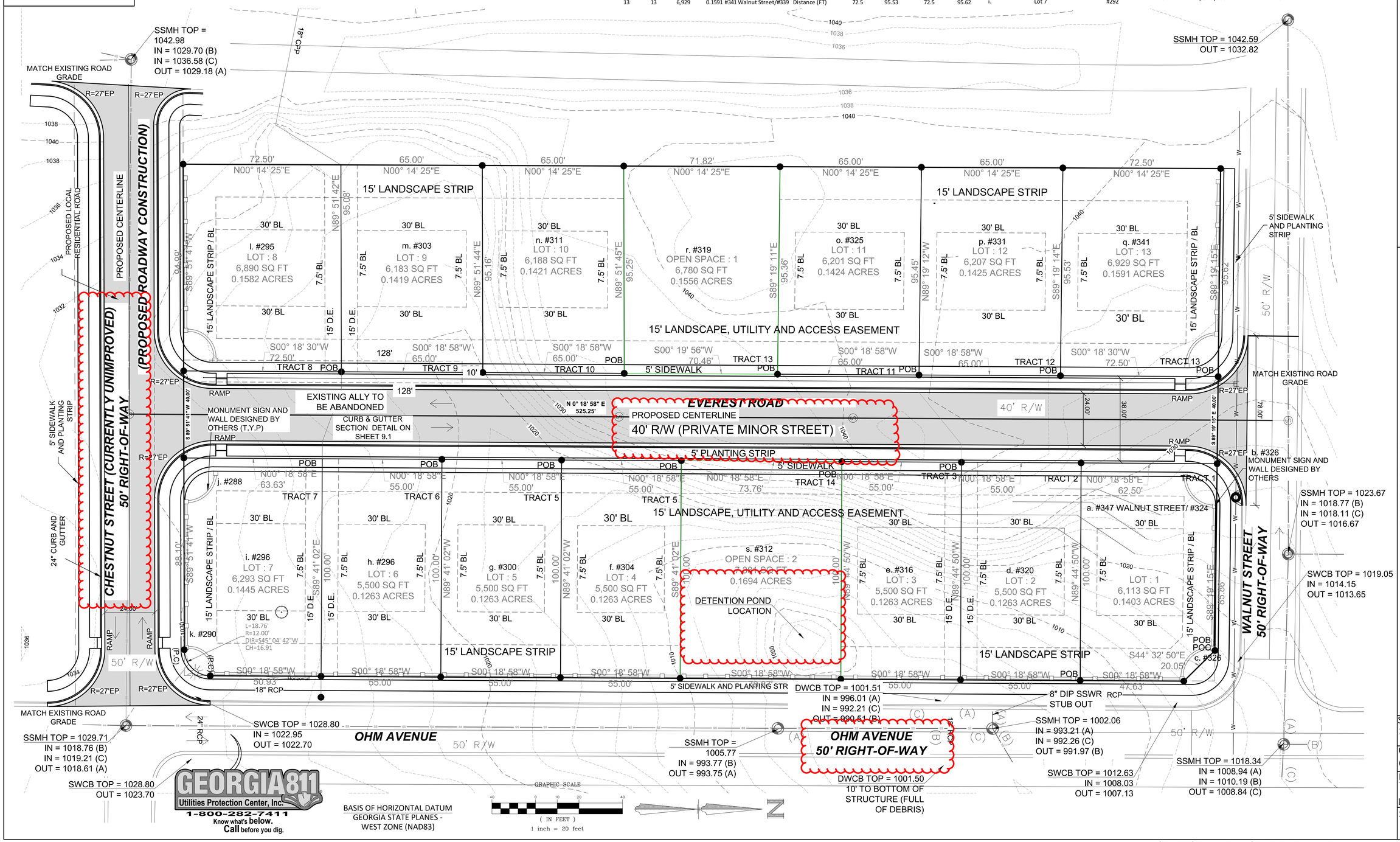

GRANT SHEPHERD & ASSOCIATES, INC.
Construction Layout GPS
Modeling
Land Surveying
Site
735 LONGLEAF BOULEVARD SUITE A, LAWRENCEVILLE, GA 30046
PHONE: 770.418.9823 FAX: 770.418.9289
www.gsasurveying.com

COA/LSF 000459

GEORGIA REGISTERED No. 2136 LAND SURVEYOR Aaron G. Shepherd

SKETCH PLAT
FOR
CHESTNUT TRACE PARK - AKA OHM AVENUE

PROPERTY LOCATED IN
LAND LOT 009 1ST SECTION, 18TH DISTRICT
298 OHM AVENUE AVONDALE
ESTATES, GA 30002
DEKALB COUNTY

SITE PLAN
1" = 20'
Unless Otherwise Noted

GSA Project No.
OHM AVENUE SKETCH

Drawn By / Field Crew
MRS/CW
LD / SANTY 10/22/19

Sheet No. 04 OF 9.1

THE USE OF THIS DOCUMENT FORMAT IS STRICTLY PROHIBITED AND CONTINGENT UPON WRITTEN CONSENT AND PERMISSION OF GRANT SHEPHERD & ASSOCIATES, INC.

Z:\Dwg2019\Ohm Ave Concept\953-13-017 Ohm Ave - Concept 3 - sketch plat.dwg

Water Quality Calculations

BASINS: HOUSE, PORCH, STEPS 1,715 S.F
DRIVEWAY, SIDEWALK, WALLS 770 SF

TOTAL IMPERVIOUS FOR WQ DESIGN 2,485 S.F

RAINFALL TO BE TREATED= 1.2"
VOLUME REQUIRED= 248.5 CU.FT
LENGTH OF GRAVEL PIT= 35'
WIDTH OF GRAVEL PIT= 5'
DEPTH OF GRAVEL IN PIT=4'
TOTAL TRENCH VOLUME (LxWxH)= 700 CUBIC FEET
GRAVEL VOID REDUCTION (40%)= 280 CUBIC FEET
280 CUBIC FEET PROVIDED > 248.5 CUBIC FEET REQUIRED

NOTE:
WATER QUALITY WILL ALSO BE LOOKED AT PER A LOT BASES

TRENCH MAINTENANCE

1. INSPECT GUTTERS AND DOWNSPOUTS. REMOVING ACCUMULATED LEAVES AND DEBRIS. CLEANING LEAF REMOVAL SYSTEMS.
2. IF APPLICABLE, INSPECT PRETREATMENT DEVICES FOR SEDIMENT ACCUMULATION. REMOVE ACCUMULATED TRASH AAND DEBRIS.
3. INSPECT DRY WELL FOLLOWING A LARGE RAINFALL EVENT TO INSURE OVERFLOW IS OPERATING AND FLOW IS NOT CAUSING PROBLEMS.

Volume		
Base Surface	EG	
Comparison Surface	FG	
Cut Factor		1
Fill Factor		1
Cut volume (adjusted)	5517.84 Cu.Yd.	
Fill volume (adjusted)	2215.85 Cu.Yd	
Net volume (adjusted)	3301.99 Cu.Yd. <Cut>	
Cut volume (unadjusted)	5517.84 Cu.Yd.	
Fill volume (unadjusted)	2215.85 Cu.Yd.	
Net volume (unadjusted)	3301.99 Cu.Yd. <Cut>	

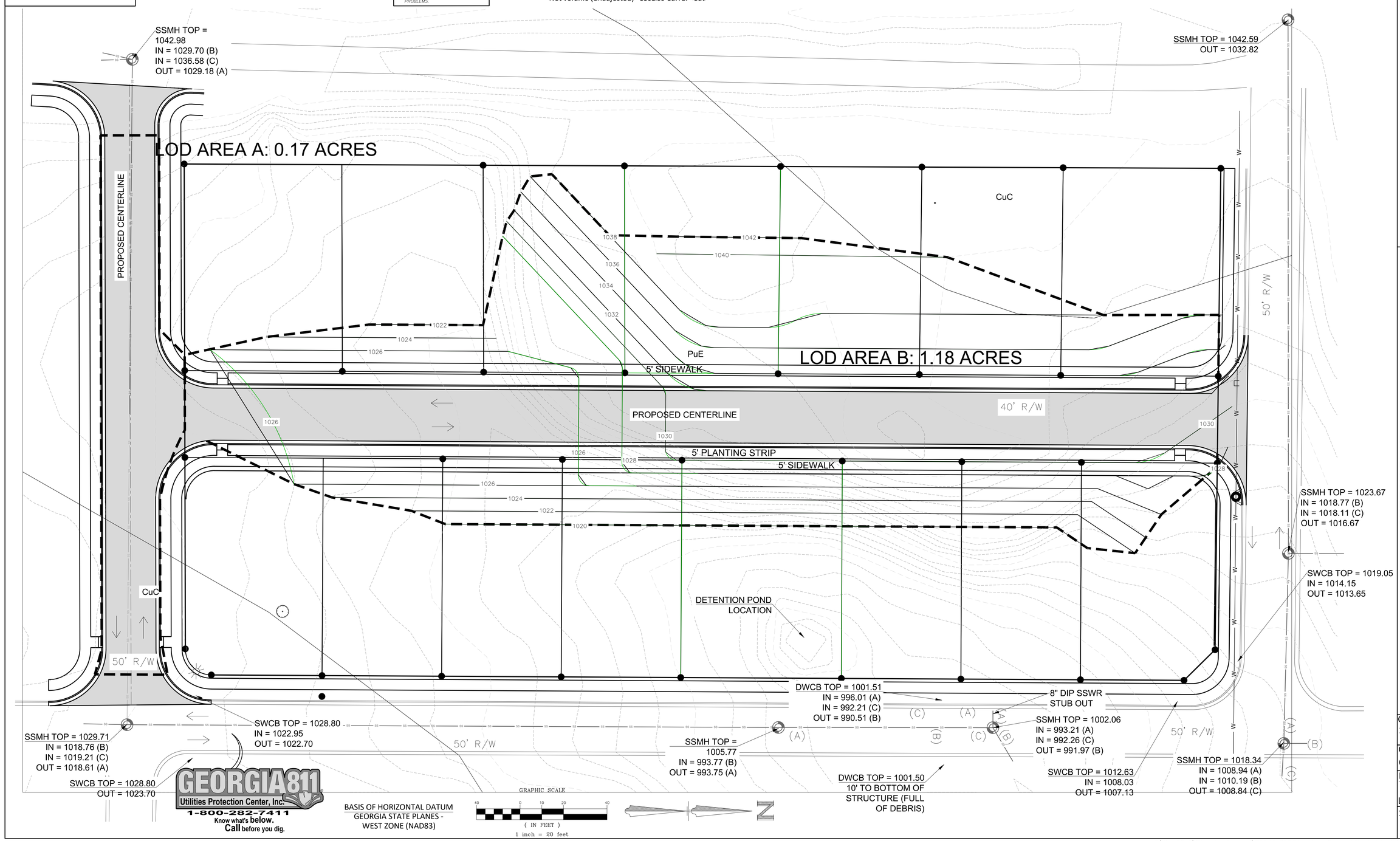

GRANT SHEPHERD & ASSOCIATES, INC.
Construction Layout GPS
Modeling
Land Surveying
Site Development
735 LONGLEAF BOULEVARD SUITE A, LAWRENCEVILLE, GA 30046
PHONE: 770.418.9823 FAX: 770.418.9289
www.gsasurveying.com
COA/LSF 000459

THE USE OF THIS DOCUMENT FORMAT IS STRICTLY PROHIBITED AND CONTINGENT UPON WRITTEN CONSENT AND PERMISSION OF GRANT SHEPHERD & ASSOCIATES, INC.

GEORGIA REGISTERED No. 2136 LAND SURVEYOR Aaron G. Shepherd

SKETCH PLAT
FOR
CHESTNUT TRACE PARK - AKA OHM AVENUE
PROPERTY LOCATED IN
LAND LOT 009 1ST SECTION, 18TH DISTRICT
298 OHM AVENUE AVONDALE
ESTATES, GA 30002
DEKALB COUNTY

GRADING PLAN
1" = 20'
Unless Otherwise Noted

GSA Project No.
OHM AVENUE SKETCH

Drawn By / Field Crew
MRS/CW
LD / SANTY 10/22/19

Sheet No. 05 OF 9.1

Z:\Dwg2019\Ohm Ave Concept\953-13-017 Ohm Ave - Concept 3 - sketch plat.dwg

Water Quality Calculations

BASINS: HOUSE, PORCH, STEPS 1,715 S.F
DRIVEWAY, SIDEWALK, WALLS 770 SF

TOTAL IMPERVIOUS FOR WQ DESIGN 2,485 S.F

RAINFALL TO BE TREATED= 1.2"
VOLUME REQUIRED= 248.5 CU.FT
LENGTH OF GRAVEL PIT= 35'
WIDTH OF GRAVEL PIT= 5'
DEPTH OF GRAVEL IN PIT=4'
TOTAL TRENCH VOLUME (LxWxH)= 700 CUBIC FEET
GRAVEL VOID REDUCTION (40%)= 280 CUBIC FEET
280 CUBIC FEET PROVIDED > 248.5 CUBIC FEET REQUIRED

NOTE:
WATER QUALITY WILL ALSO BE LOOKED AT PER A LOT BASES

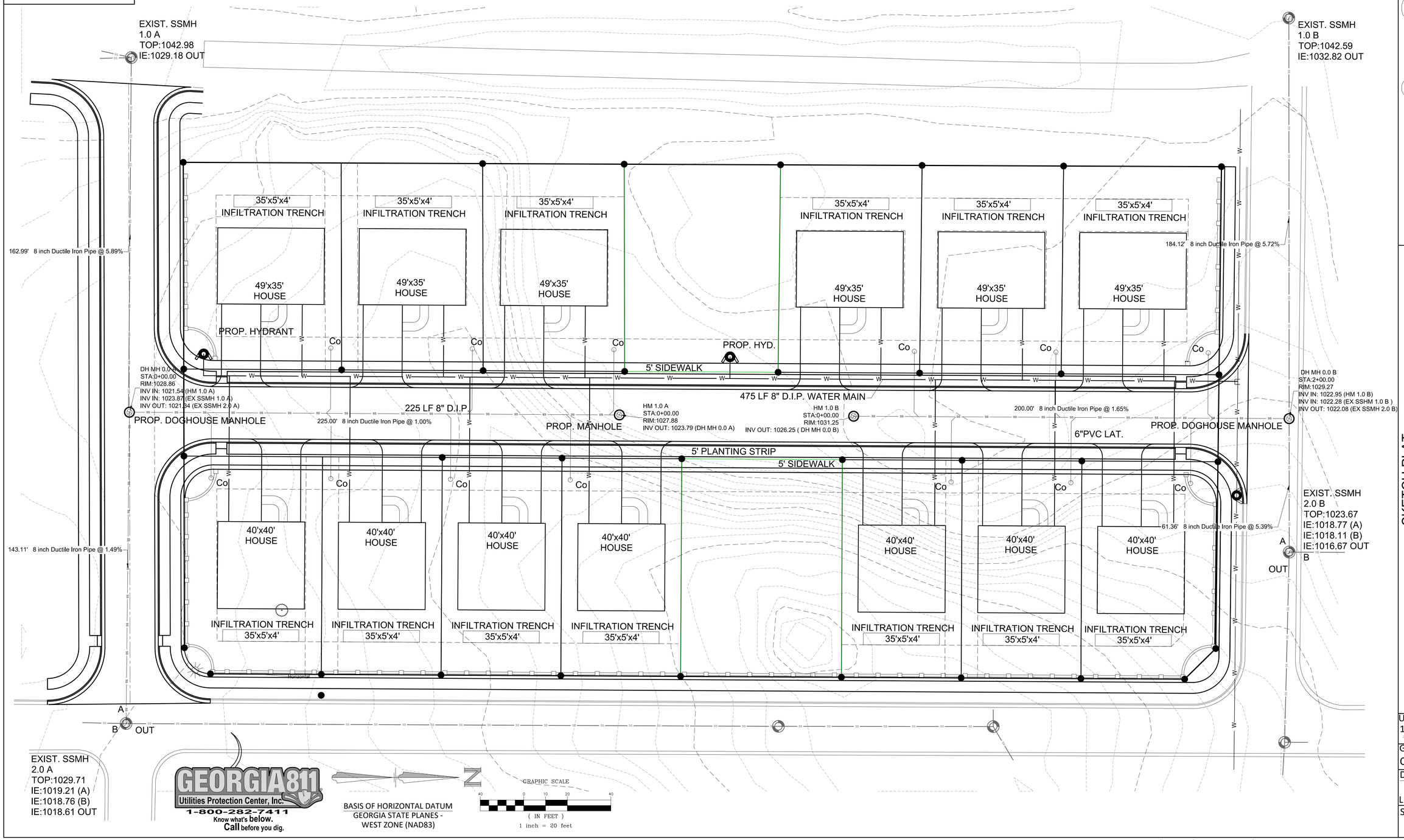

GRANT SHEPHERD & ASSOCIATES, INC.
Construction Layout GPS
Modeling
Land Surveying
Site
735 LONGLEAF BOULEVARD SUITE A, LAWRENCEVILLE, GA 30046
PHONE: 770.418.9823 FAX: 770.418.9289
www.gsasurveying.com
COA/LSF 000459

THE USE OF THIS DOCUMENT FORMAT IS STRICTLY PROHIBITED AND CONTINGENT UPON WRITTEN CONSENT AND PERMISSION OF GRANT SHEPHERD & ASSOCIATES, INC.

GEORGIA REGISTERED No. 2136 LAND SURVEYOR Aaron G. Shepherd

SKETCH PLAT
FOR
CHESTNUT TRACE PARK - AKA OHM AVENUE
PROPERTY LOCATED IN
LAND LOT 009 1ST SECTION, 18TH DISTRICT
298 OHM AVENUE AVONDALE
ESTATES, GA 30002
DEKALB COUNTY

UTILITY PLAN 1" = 20' *Unless Otherwise Noted*	
GSA Project No.	OHM AVENUE SKETCH
Drawn By / Field Crew	MRS/CW
LD / SANTY	10/22/19
Sheet No.	06 OF 9.1

Z:\Dwg2019\Ohm Ave Concept\953-13-017 Ohm Ave - Concept 3 - sketch plat.dwg

Water Quality Calculations

BASINS: HOUSE, PORCH, STEPS 1,715 S.F
DRIVEWAY, SIDEWALK, WALLS 770 SF

TOTAL IMPERVIOUS FOR WQ DESIGN 2,485 S.F

RAINFALL TO BE TREATED= 1.2"
VOLUME REQUIRED= 248.5 CU.FT
LENGTH OF GRAVEL PIT= 35'
WIDTH OF GRAVEL PIT= 5'
DEPTH OF GRAVEL IN PIT=4'
TOTAL TRENCH VOLUME (LxWxH)= 700 CUBIC FEET
GRAVEL VOID REDUCTION (40%)= 280 CUBIC FEET
280 CUBIC FEET PROVIDED > 248.5 CUBIC FEET REQUIRED

NOTE:
WATER QUALITY WILL ALSO BE LOOKED AT PER A LOT BASES

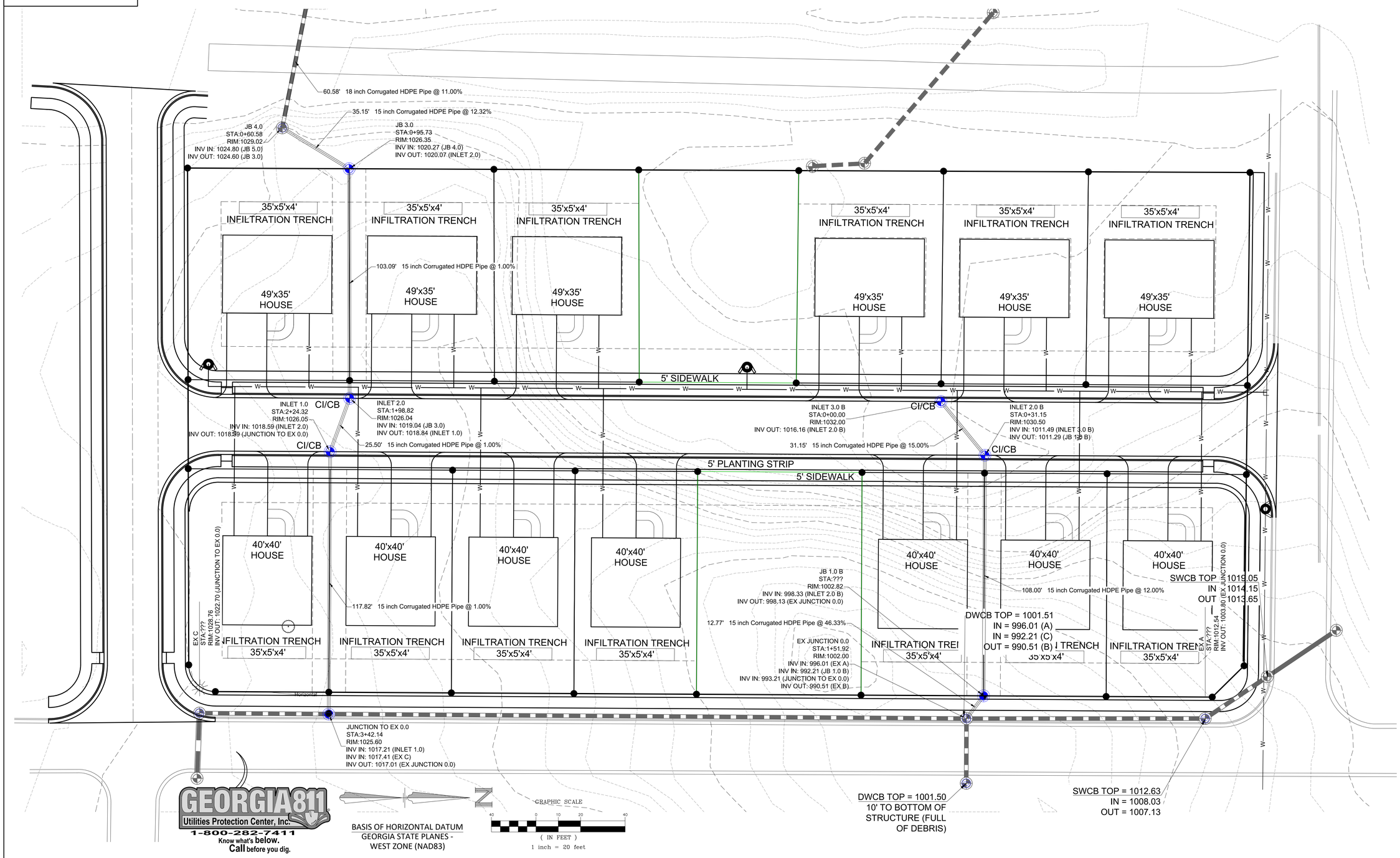

GRANT SHEPHERD & ASSOCIATES, INC.
Construction Layout GPS
Modeling •
Land Surveying
Site
735 LONGLEAF BOULEVARD SUITE A, LAWRENCEVILLE, GA 30046
PHONE: 770.418.9823 FAX: 770.418.9289
www.gsasurveying.com

COA/LSF 000459

GEORGIA REGISTERED No. 2136 LAND SURVEYOR Aaron G. Shepherd

THE USE OF THIS DOCUMENT FORMAT IS STRICTLY PROHIBITED AND CONTINGENT UPON WRITTEN CONSENT AND PERMISSION OF GRANT SHEPHERD & ASSOCIATES, INC.

SKETCH PLAT
FOR
CHESTNUT TRACE PARK - AKA OHM AVENUE
PROPERTY LOCATED IN
LAND LOT 009 1ST SECTION, 18TH DISTRICT
298 OHM AVENUE AVONDALE
ESTATES, GA 30002
DEKALB COUNTY

STORM WATER
1" = 20'
Unless Otherwise Noted
GSA Project No.
OHM AVENUE SKETCH
Drawn By / Field Crew
MRS/CW
LD / SANTY 10/22/19
Sheet No. 6.1 OF 9.1

Z:\Dwg2019\Ohm Ave Concept\953-13-017 Ohm Ave - Concept 3 - sketch plat.dwg

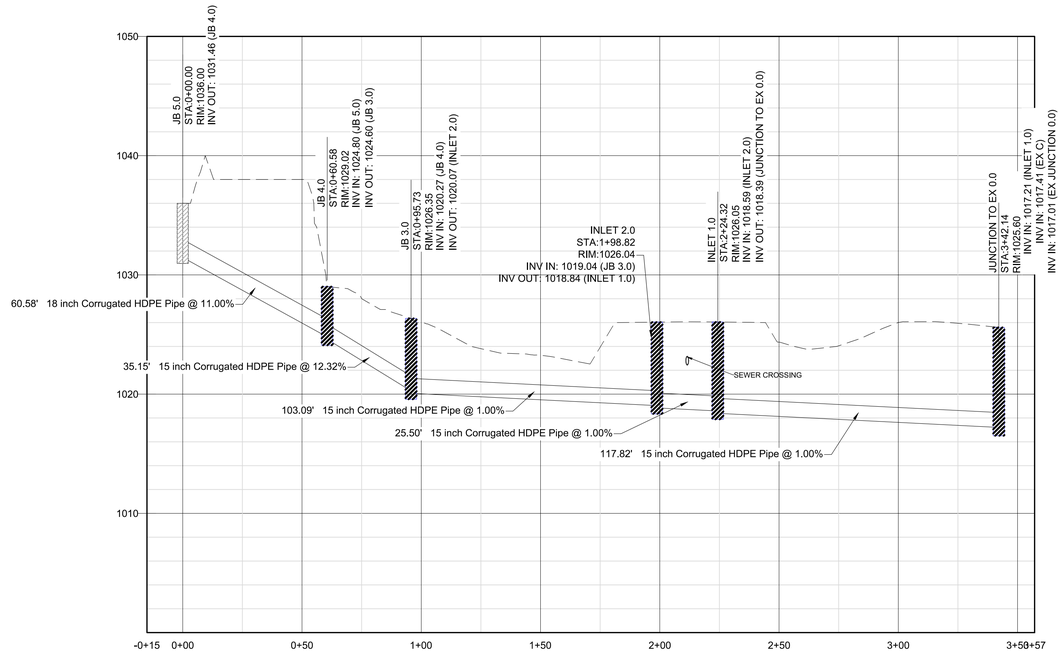

STRM A

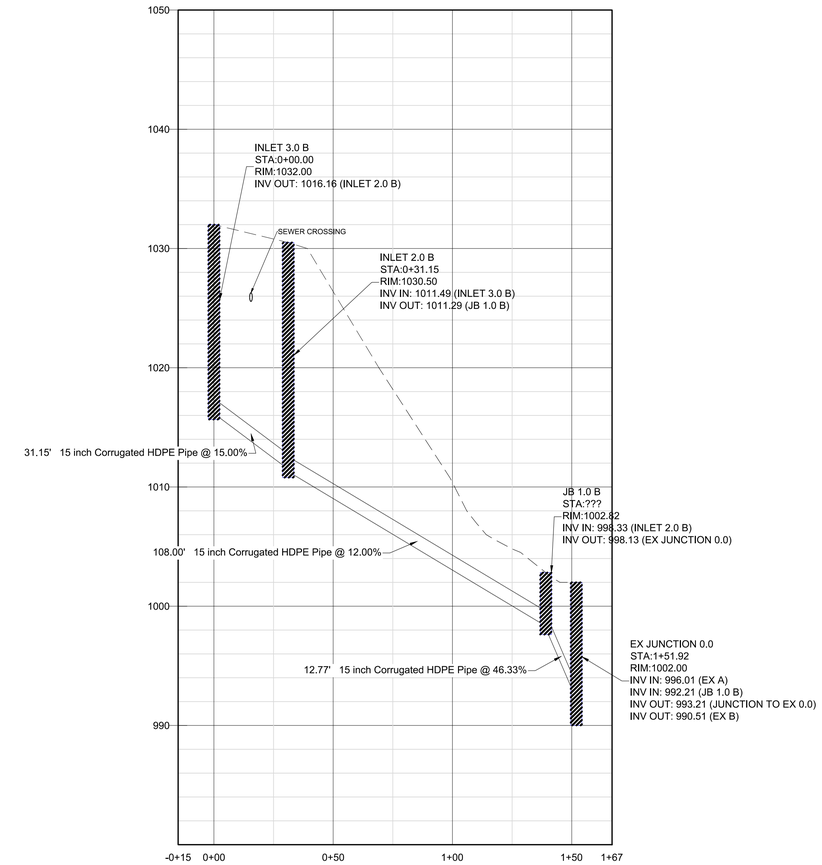

STRM B

GEORGIA811
Utilities Protection Center, Inc.
1-800-282-7411
Know what's below.
Call before you dig.

BASIS OF HORIZONTAL DATUM
GEORGIA STATE PLANES -
WEST ZONE (NAD83)

VERTICAL
GRAPHIC SCALE
10 0 2.5 5 10
(IN FEET)
1 inch = 5 feet

HORIZONTAL
GRAPHIC SCALE
60 0 15 30 60
(IN FEET)
1 inch = 30 feet

GRANT SHEPHERD & ASSOCIATES, INC.
Construction Layout GPS
Modeling
Land Surveying
Site
735 LONGLEAF BOULEVARD SUITE A, LAWRENCEVILLE, GA 30046
PHONE: 770.418.9823 FAX: 770.418.9289
www.gsasurveying.com

COA/LSF 000459

GEORGIA REGISTERED No. 2136 LAND SURVEYOR Aaron G. Shepherd

SKETCH PLAT
FOR
CHESTNUT TRACE PARK - AKA OHM AVENUE
PROPERTY LOCATED IN
LAND LOT 009 1ST SECTION, 18TH DISTRICT
298 OHM AVENUE AVONDALE
ESTATES, GA 30002
DEKALB COUNTY

PROFILES
1" = 20'
Unless Otherwise Noted

GSA Project No.
OHM AVENUE SKETCH

Drawn By / Field Crew
MRS/CW
LD / SANTY 10/22/19

Sheet No. 6.2 OF 9.1

THE USE OF THIS DOCUMENT FORMAT IS STRICTLY PROHIBITED AND CONTINGENT UPON WRITTEN CONSENT AND PERMISSION OF GRANT SHEPHERD & ASSOCIATES, INC.

Z:\Dwg2019\Ohm Ave Concept\953-13-017 Ohm Ave - Concept 3 - sketch plat.dwg

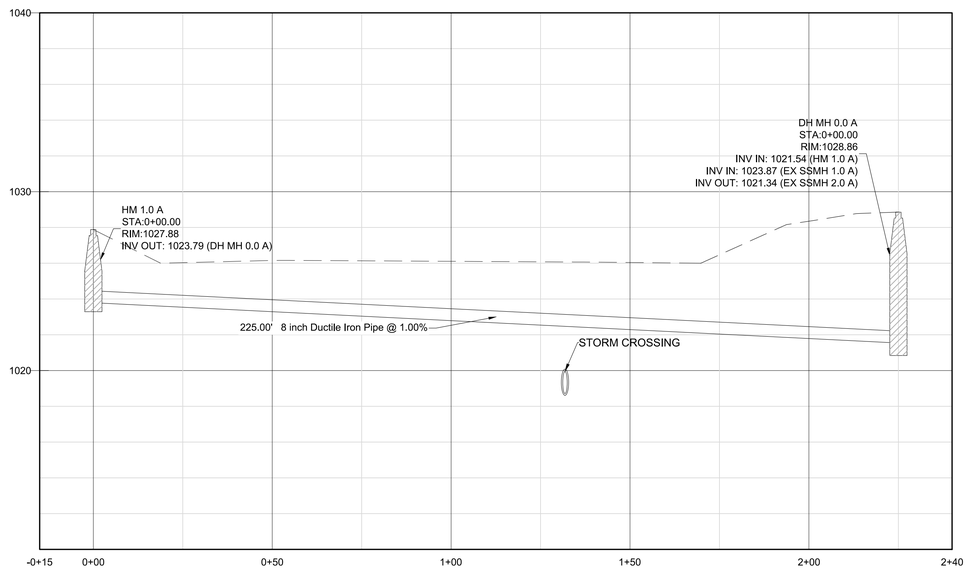

SEWER A

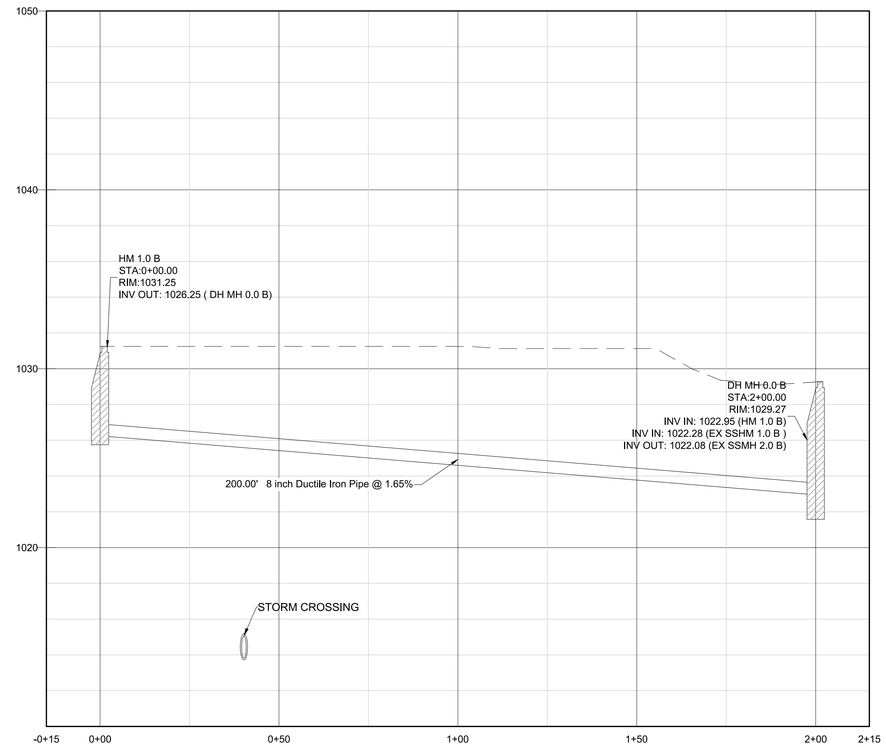

SEWER B

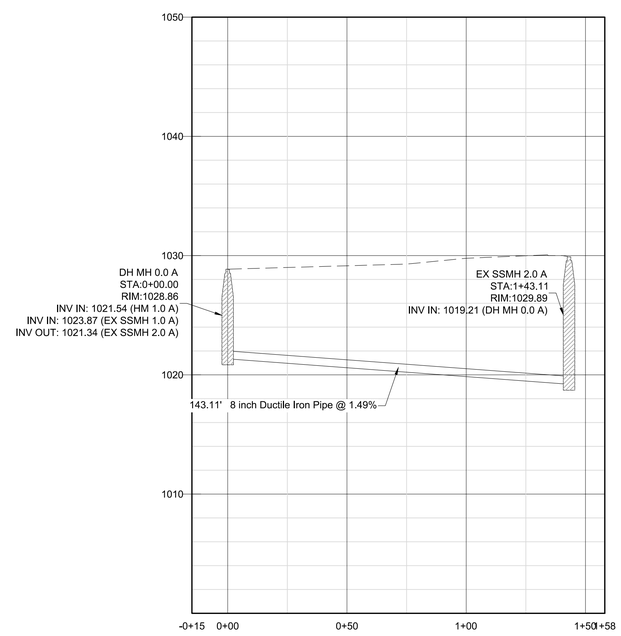

SEWER C

GEORGIA811
Utilities Protection Center, Inc.
1-800-282-7411
Know what's below.
Call before you dig.

BASIS OF HORIZONTAL DATUM
GEORGIA STATE PLANES -
WEST ZONE (NAD83)

N

VERTICAL
GRAPHIC SCALE
5 0 2.5 5 10
(IN FEET)
1 inch = 5 feet

HORIZONTAL
GRAPHIC SCALE
40 0 10 20 40
(IN FEET)
1 inch = 20 feet

GRANT SHEPHERD & ASSOCIATES, INC.
Construction Layout GPS
Modeling
Land Surveying
Site
735 LONGLEAF BOULEVARD SUITE A, LAWRENCEVILLE, GA 30046
PHONE: 770.418.9823 FAX: 770.418.9289
www.gsasurveying.com

COA/LSF 000459

GEORGIA REGISTERED No. 2136 LAND SURVEYOR Aron G. Shepherd

SKETCH PLAT
FOR
CHESTNUT TRACE PARK - AKA OHM AVENUE
PROPERTY LOCATED IN
LAND LOT 009 1ST SECTION, 18TH DISTRICT
298 OHM AVENUE AVONDALE
ESTATES, GA 30002
DEKALB COUNTY

PROFILES 1" = 20' *Unless Otherwise Noted*	
GSA Project No.	
OHM AVENUE SKETCH	
Drawn By / Field Crew	
LD / SANTY	MRS/CW 10/22/19
Sheet No.	6.3 OF 9.1

THE USE OF THIS DOCUMENT FORMAT IS STRICTLY PROHIBITED AND CONTINGENT UPON WRITTEN CONSENT AND PERMISSION OF GRANT SHEPHERD & ASSOCIATES, INC.

Z:\Dwg2019\Ohm Ave Concept\953-13-017 Ohm Ave - Concept 3 - sketch plat.dwg

TEMPORARY POND VOLUME

VOLUME: 4,473 CUBIC FEET

GSWCC Georgia Soil and Water Conservation Commission

Seaton G Shepherd
Level II Certified Design Professional

Certification Number 0000004511
Issued: 01/21/2018 Expires: 01/21/2021

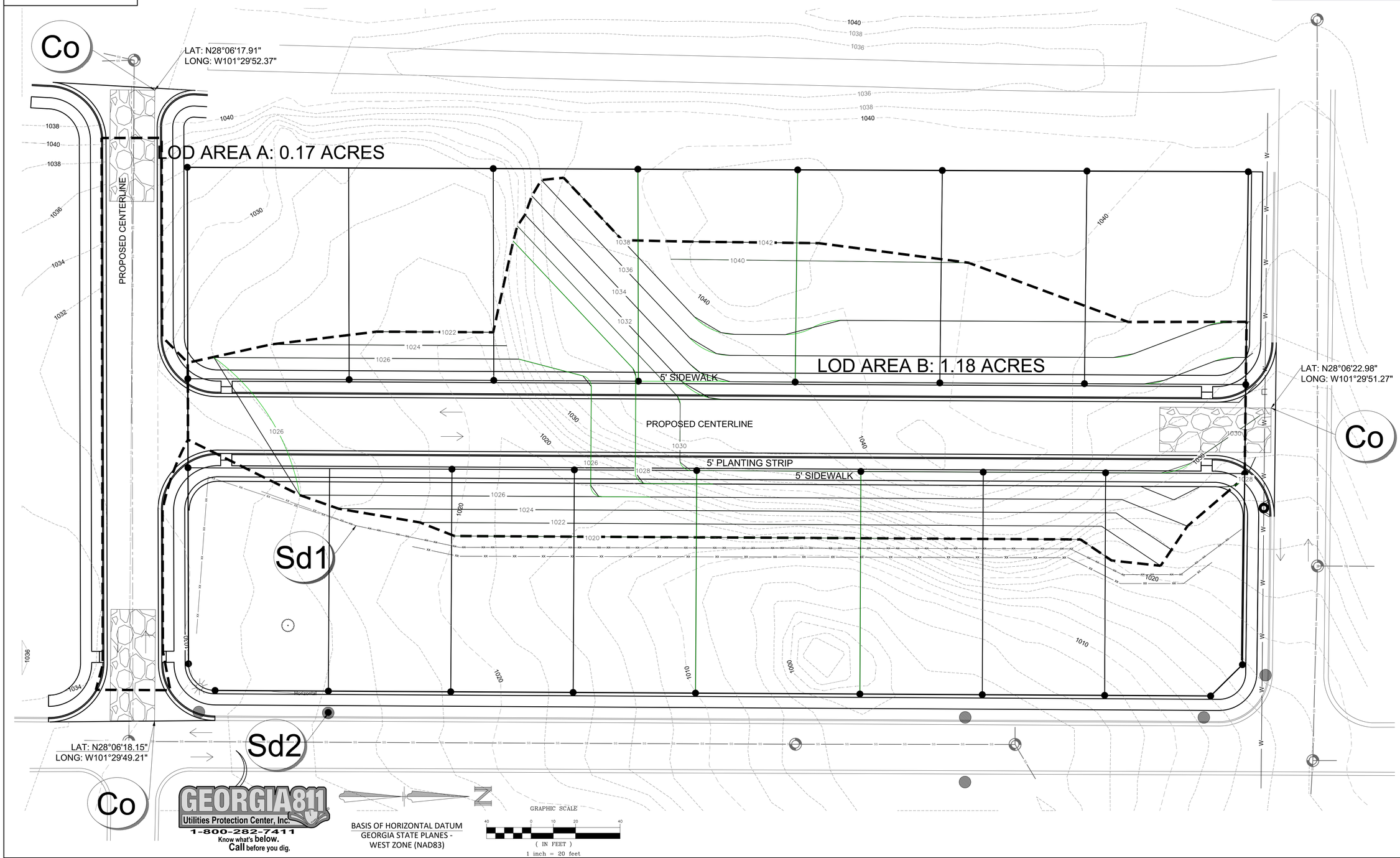

GRANT SHEPHERD & ASSOCIATES, INC.
Construction Layout GPS
Modeling •
Land Surveying
Site
735 LONGLEAF BOULEVARD SUITE A, LAWRENCEVILLE, GA 30046
PHONE: 770.418.9823 FAX: 770.418.9289
www.gsasurveying.com
COA/LSF 000459

GEORGIA REGISTERED No. 2136 LAND SURVEYOR Seaton G. Shepherd

SKETCH PLAT
FOR
CHESTNUT TRACE PARK - AKA OHM AVENUE
PROPERTY LOCATED IN
LAND LOT 009 1ST SECTION, 18TH DISTRICT
298 OHM AVENUE AVONDALE
ESTATES, GA 30002
DEKALB COUNTY

EROSION PLAN PH I
1" = 20'
Unless Otherwise Noted

GSA Project No.
OHM AVENUE SKETCH

Drawn By / Field Crew
MRS/CW
LD / SANTY 10/22/19

Sheet No. 07 OF 9.1

THE USE OF THIS DOCUMENT FORMAT IS STRICTLY PROHIBITED AND CONTINGENT UPON WRITTEN CONSENT AND PERMISSION OF GRANT SHEPHERD & ASSOCIATES, INC.

Z:\Dwg2019\Ohm Ave Concept\953-13-017 Ohm Ave - Concept 3 - sketch plat.dwg

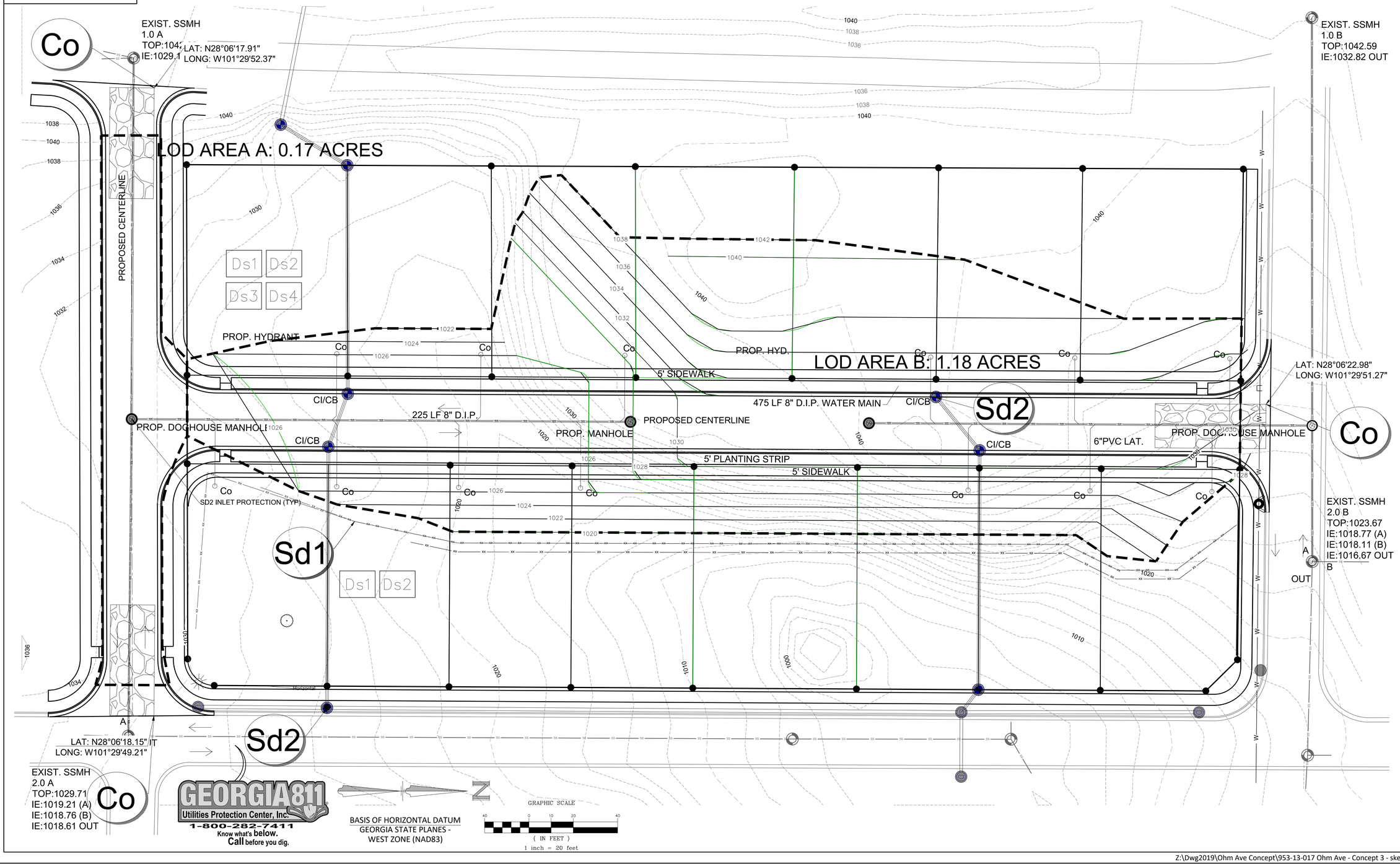

GSWCC Georgia Soil and Water Conservation Commission

Seaton G Shepherd
Level II Certified Design Professional

Certification Number 0000004511
Issued: 01/21/2018 Expires: 01/21/2021

GRANT SHEPHERD & ASSOCIATES, INC.
Construction Layout GPS
Modeling
Land Surveying
Site Development
735 LONGLEAF BOULEVARD SUITE A, LAWRENCEVILLE, GA 30046
PHONE: 770.418.9823 FAX: 770.418.9289
www.gsasurveying.com
COA/LSF 000459

THE USE OF THIS DOCUMENT FORMAT IS STRICTLY PROHIBITED AND CONTINGENT UPON WRITTEN CONSENT AND PERMISSION OF GRANT SHEPHERD & ASSOCIATES, INC.

GEORGIA REGISTERED No. 2136 LAND SURVEYOR Seaton G. Shepherd

SKETCH PLAT
FOR
CHESTNUT TRACE PARK - AKA OHM AVENUE

PROPERTY LOCATED IN
LAND LOT 009 1ST SECTION, 18TH DISTRICT
298 OHM AVENUE AVONDALE
ESTATES, GA 30002
DEKALB COUNTY

EROSION PH II	
1" = 20'	
Unless Otherwise Noted	
GSA Project No.	
OHM AVENUE SKETCH	
Drawn By / Field Crew	
	MRS/CW
LD / SANTY	10/22/19
Sheet No.	7.1 OF 9.1

Z:\Dwg2019\Ohm Ave Concept\953-13-017 Ohm Ave - Concept 3 - sketch plat.dwg

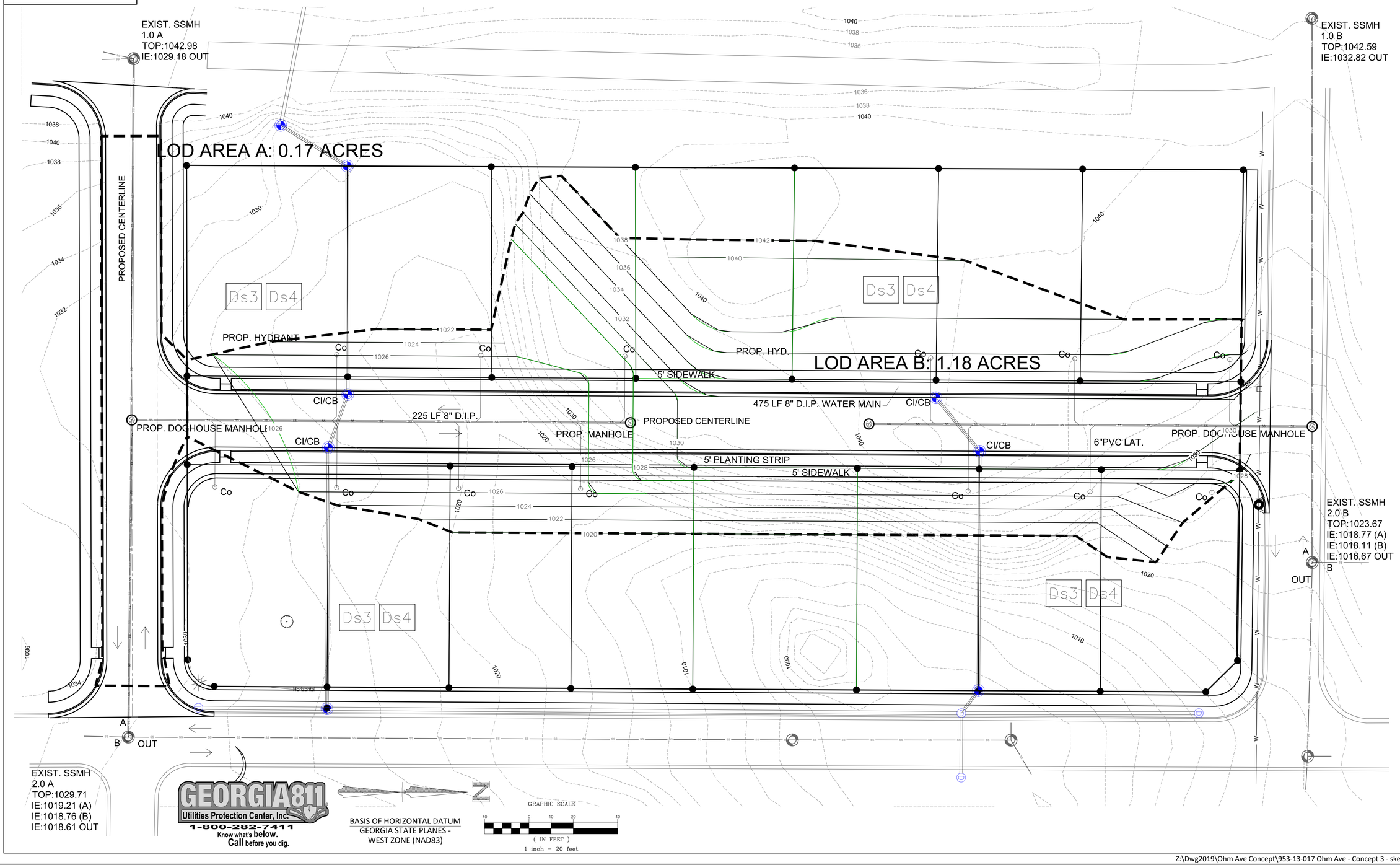

GSWCC Georgia Soil and Water Conservation Commission

Seaton G Shepherd
Level II Certified Design Professional

Certification Number 0000004511
Issued: 01/21/2018 Expires: 01/21/2021

GRANT SHEPHERD & ASSOCIATES, INC.
Construction Layout GPS
Modeling
Land Surveying
Site
735 LONGLEAF BOULEVARD SUITE A, LAWRENCEVILLE, GA 30046
PHONE: 770.418.9823 FAX: 770.418.9289
www.gsasurveying.com
COA/LSF 000459

GEORGIA REGISTERED No. 2136 LAND SURVEYOR Seaton G. Shepherd

SKETCH PLAT
FOR
CHESTNUT TRACE PARK - AKA OHM AVENUE

PROPERTY LOCATED IN
LAND LOT 009 1ST SECTION, 18TH DISTRICT
298 OHM AVENUE AVONDALE
ESTATES, GA 30002
DEKALB COUNTY

THE USE OF THIS DOCUMENT FORMAT IS STRICTLY PROHIBITED AND CONTINGENT UPON WRITTEN CONSENT AND PERMISSION OF GRANT SHEPHERD & ASSOCIATES, INC.

EROSION PH III
1" = 20'
Unless Otherwise Noted
GSA Project No.
OHM AVENUE SKETCH
Drawn By / Field Crew
MRS/CW
LD / SANTY 10/22/19
Sheet No. 7.2 OF 9.1

Z:\Dwg2019\Ohm Ave Concept\953-13-017 Ohm Ave - Concept 3 - sketch plat.dwg

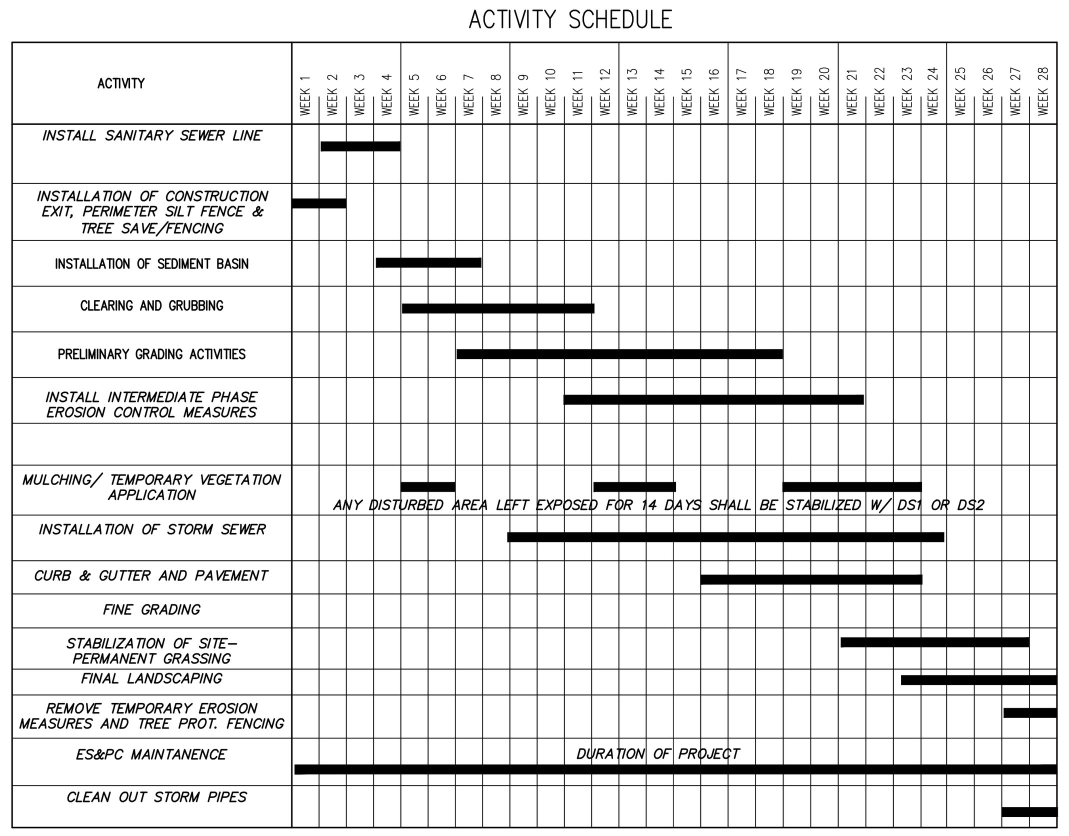

TOTAL SITE AREA = 2.56 ACRES

TOTAL DISTURBED AREA = 1.17 ±

MONITORING SHALL APPLY TO THIS DEVELOPMENT–ALL PHASES.

GEORGIA811
Utilities Protection Center, Inc.
1-800-282-7411
Know what's **below.**
Call before you dig.

STRUCTURAL PRACTICES

CODE	PRACTICE	DETAIL	MAP SYMBOL	DESCRIPTION
Co	CONSTRUCTION EXIT		Co	A crushed stone pad located at the construction site exit to provide a place for removing mud from tires thereby protecting public streets.
Sd1	SEDIMENT BARRIER			A barrier to prevent sediment from leaving the construction site. It may be sandbags, bales of straw or hay, brush, logs and poles, gravel, or a silt fence.

VEGETATIVE PRACTICES

CODE	PRACTICE	DETAIL	MAP SYMBOL	DESCRIPTION
Bf	BUFFER ZONE		Bf	Strip of undisturbed original vegetation, enhanced or restored existing vegetation or the reestablishment of vegetation surrounding an area of disturbance or bordering streams.
Cs	COASTAL DUNE STABILIZATION (WITH VEGETATION)		Cs	Planting vegetation on dunes that are denuded artificially constructed, or re-nourished.
Ds1	DISTURBED AREA STABILIZATION (WITH MULCHING ONLY)		Ds1	Establishing temporary protection for disturbed areas where seedings may not have a suitable growing season to produce an erosion retarding cover.
Ds2	DISTURBED AREA STABILIZATION (WITH TEMP SEEDING)		Ds2	Establishing a temporary vegetative cover with fast growing seedings on disturbed areas.
Ds3	DISTURBED AREA STABILIZATION (WITH PERM SEEDING)		Ds3	Establishing a permanent vegetative cover such as trees, shrubs, vines, grasses, or legumes on disturbed areas.
Ds4	DISTURBED AREA STABILIZATION (SODDING)		Ds4	A permanent vegetative cover using sods on highly erodable or critically eroded lands.
Du	DUST CONTROL ON DISTURBED AREAS		Du	Controlling surface and air movement of dust on construction site, roadways and similar sites.
Fl-Co	FLOCCULANTS AND COAGULANTS		Fl-Co	Substance formulated to assist in the solids/liquid separation of suspended particles in solution.
Sb	STREAMBANK STABILIZATION (USING PERM VEGETATION)		Sb	The use of readily available native plant materials to maintain and enhance streambanks, or to prevent, or restore and repair small streambank erosion problems.
Ss	SLOPE STABILIZATION		Ss	A protective covering used to prevent erosion and establish temporary or permanent vegetation on steep slopes, shore lines, or channels.
Tac	TACKIFIERS AND BINDERS		Tac	Substance used to anchor straw or hay mulch by causing the organic material to bind together.

Vicinity Map (NTS)

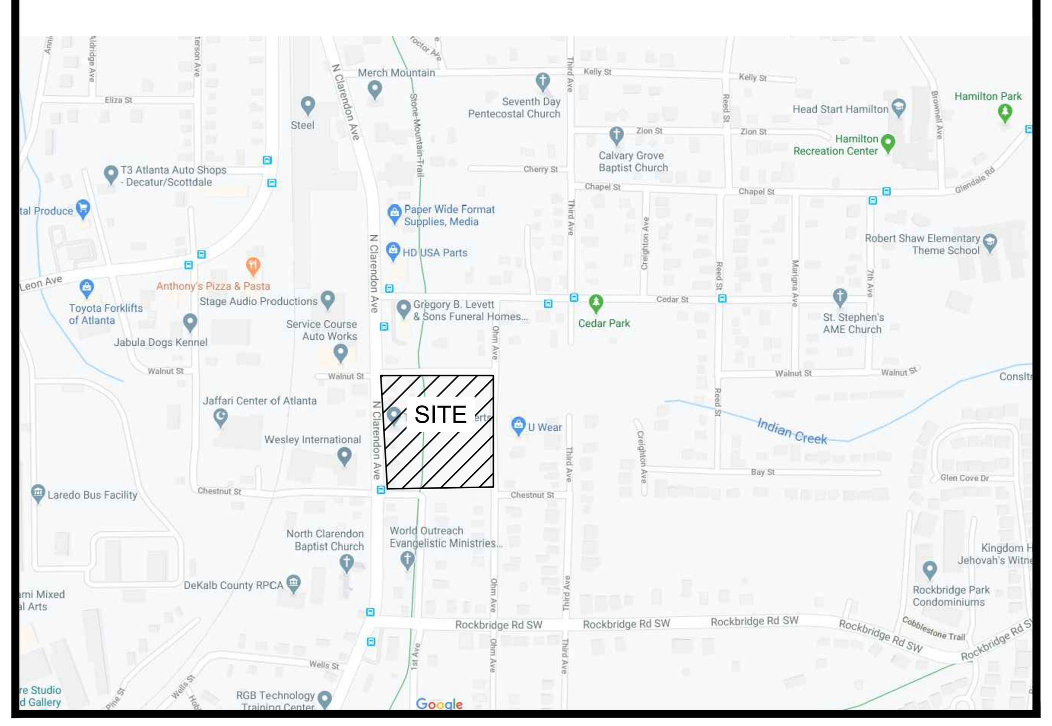

NOTE:
RECEIVING WATERS: SNAPFINGER CREEK. WATERS LOOKS TO FLOW INTO INDIAN CREEK WHICH FLOWS INTO SNAPFINGER CREEK

METHOD OF CONTAINMENT: THE USE OF Sd1, Sd2, CO, AND AND SOIL STABILIZATION METHODS ARE TO BE USED TO KEEP THE SEDIMENT ONSITE AND CONTAINED.

THERE WAS ON PRIER USE OF THIS LAND AND THIS IS A 13 LOT AND 2 OPEN SPACE DEVELOPMENT

THE ESCAPE OF SEDIMENT FROM THE SITE SHALL BE PREVENTED BY THE INSTALLATION OF EROSION AND SEDIMENT CONTROL MEASURES AND PRACTICES PRIOR TO, OR CONCURRENT WITH, LAND DISTURBING ACTIVITIES

EROSION CONTROL MEASURES WILL BE MAINTAINED AT ALL TIMES. IF FULL IMPLEMENTATION OF THE APPROVED PLANS DOES NOT PROVIDE FOR EFFECTIVE EROSION CONTROL, ADDITIONAL EROSION AND SEDIMENT CONTROL MEASURES SHALL BE IMPLEMENTED TO CONTROL OR TREAT THE SEDIMENT SOURCE.

ADDITIONAL EROSION AND SEDIMENT CONTROL MEASURES AND PRACTICES WILL BE INSTALLED IF DEEMED NECESSARY BY THE ON-SITE INSPECTOR.

ADDITIONAL EROSION AND SEDIMENT CONTROL MEASURES AND PRACTICES WILL BE INSTALLED IF DEEMED NECESSARY BY THE ON-SITE INSPECTOR.

EROSION AND SEDIMENT CONTROL MEASURES AND PRACTICES TO BE INSPECTED DAILY.

CUT AND FILL SLOPES SHALL NOT EXCEED 3H: 1V ON RESIDENTIAL PROJECTS AND SHALL NOT EXCEED 2H: 1V ON ALL OTHER PROJECTS

WEEKLY EROSION AND SEDIMENT CONTROL REPORTS SHALL BE SUBMITTED TO THE DEVELOPMENT DEPARTMENT STARTING WITH THE ISSUANCE OF THE DEVELOPMENT PERMIT AND ENDING WHEN THE PROJECT IS RELEASED BY THE INSPECTOR.

I CERTIFY THAT THE PERMITTEE'S EROSION, SEDIMENTATION AND POLLUTION CONTROL PLAN PROVIDES FOR AN APPROPRIATE AND COMPREHENSIVE SYSTEM OF BEST MANAGEMENT PRACTICES REQUIRED BY THE GEORGIA WATER QUALITY CONTROL ACT AND THE DOCUMENT 'MANUAL FOR EROSION AND SEDIMENT CONTROL IN GEORGIA', PUBLISHED BY THE STATE SOIL AND WATER CONSERVATION COMMISSION AS OF JANUARY OF THE YEAR IN WHICH THE LAND DISTURBING ACTIVITY WAS PERMITTED, PROVIDES FOR THE SAMPLING OF THE RECEIVING WATER(S) OR THE SAMPLING OF THE STORM WATER OUTFALLS AND THE DESIGNED SYSTEM OF BEST MANAGEMENT PRACTICES AND SAMPLING METHODS IS EXPECTED TO MEET THE REQUIREMENTS CONTAINED IN THE GENERAL NPDES PERMIT NO. GAR 10000-."(1,2 OR 3).

"I CERTIFY UNDER PENALTY OF LAW THAT THIS PLAN WAS PREPARED AFTER A SITE VISIT TO THE LOCATIONS DESCRIBED HEREIN BY MYSELF OR MY AUTHORIZED AGENT, UNDER MY DIRECT SUPERVISION"

INSPECTIONS BY QUALIFIED PERSONNEL PROVIDED BY THE PRIMARY PERMITTEE AND THE ASSOCIATED RECORDS SHALL BE KEPT ON SITE IN COMPLIANCE WITH GAR.10000-(1,2 OR 3).

ANY IMPERVIOUS WATER RUNOFF FROM LOTS BY-PASSING WATER QUALITY POND MUST BE TREATED ON A LOT PER LOT BASIS

INSTALLATION OF WATER QUALITY DEVICES SHALL BE CONCURRENT WITH FINAL STABILIZATION AND/OR PRIOR TO MAINTENANCE/PERFORMANCE BOND EXPIRATION.

*1.18 ACERS * 67 CU YD = 79.06 CU YD*
*79.06 CU YD * 27 = 2,134.62 CU FT REQUIRED*
THIS STORAGE REQUIREMENT WILL BE PICKED UP IN THE EXISTING POND 4,473.71 CU FT AND EROSION CONTROL MEASURES SUCH AS Sd1.

GSWCC
Georgia Soil and Water Conservation Commission
Seaton G Shepherd
Level II Certified Design Professional
Certification Number 0000004511
Issued: 01/21/2018 Expires: 01/21/2021

STAGE STORAGE TABLE

ELEV	AREA (sq. ft.)	DEPTH (ft)	AVG END INC. VOL. (cu. ft.)	AVG END TOTAL VOL. (cu. ft.)	CONIC INC. VOL. (cu. ft.)	CONIC TOTAL VOL. (cu. ft.)
996.00	183.09	N/A	N/A	0.00	N/A	0.00
998.00	440.82	2.00	623.91	623.91	605.34	605.34
1,000.00	891.36	2.00	1332.18	1956.09	1306.01	1911.35
1,002.00	1,626.26	2.00	2517.62	4473.71	2481.07	4392.42

CRUSHED STONE CONSTRUCTION EXIT

EXIT DIAGRAM

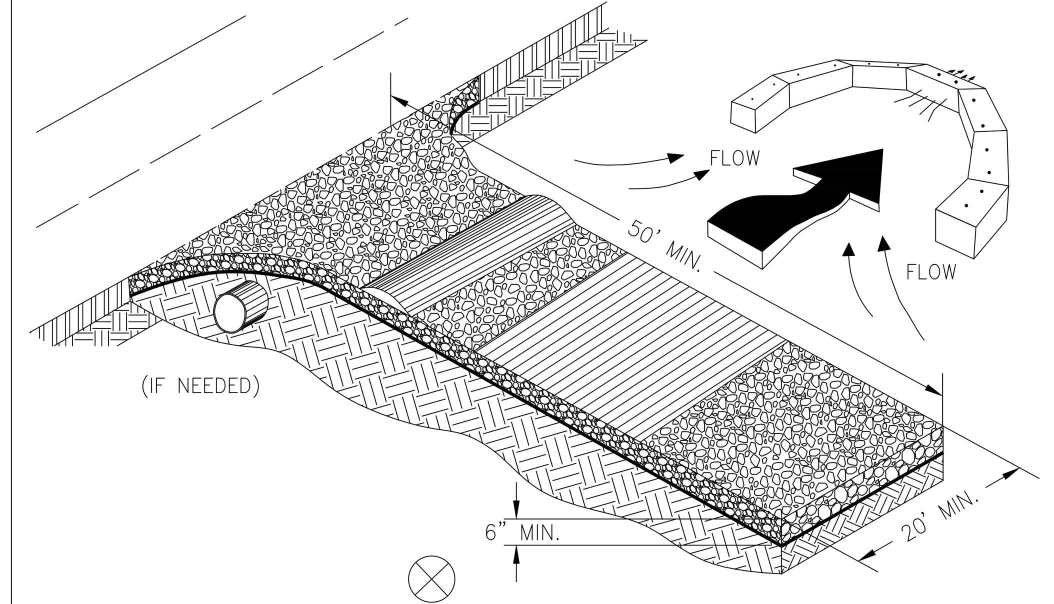

ENTRANCE ELEVATION

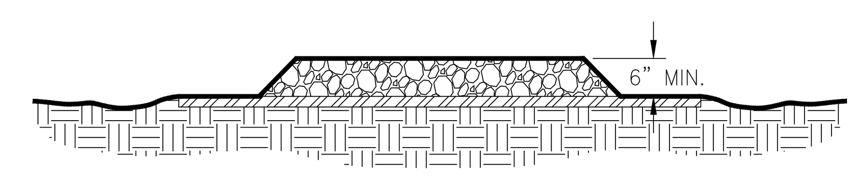

NOTES:
1. AVOID LOCATING ON STEEP SLOPES OR AT CURVES ON PUBLIC ROADS.
2. REMOVE ALL VEGETATION AND OTHER UNSUITABLE MATERIAL FROM THE FOUNDATION AREA, GRADE, AND CROWN FOR POSITIVE DRAINAGE.
3. AGGREGATE SIZE SHALL BE IN ACCORDANCE WITH NATIONAL STONE ASSOCIATION R-2 (1.5"-3.5" STONE).
4. GRAVEL PAD SHALL HAVE A MINIMUM THICKNESS OF 6".
5. PAD WIDTH SHALL BE EQUAL FULL WIDTH AT ALL POINTS OF VEHICULAR EGRESS, BUT NO LESS THAN 20'.
6. A DIVERSION RIDGE SHOULD BE CONSTRUCTED WHEN GRADE TOWARD PAVED AREA IS GREATER THAN 2%..
7. INSTALL PIPE UNDER THE ENTRANCE IF NEEDED TO MAINTAIN DRAINAGE DITCHES.
8. WHEN WASHING IS REQUIRED, IT SHOULD BE DONE ON AN AREA STABILIZED WITH CRUSHED STONE THAT DRAINS INTO AN APPROVED SEDIMENT TRAP OR SEDIMENT BASIN (DIVERT ALL SURFACE RUNOFF AND DRAINAGE FROM THE ENTRANCE TO A SEDIMENT CONTROL DEVICE).
9. WASHRACKS AND/OR TIRE WASHERS MAY BE REQUIRED DEPENDING ON SCALE AND CIRCUMSTANCE. IF NECESSARY, WASHRACK DESIGN MAY CONSIST OF ANY MATERIAL SUITABLE FOR TRUCK TRAFFIC THAT REMOVE MUD AND DIRT.
10. MAINTAIN AREA IN A WAY THAT PREVENTS TRACKING AND/OR FLOW OF MUD ONTO PUBLIC RIGHTS-OF-WAYS. THIS MAY REQUIRE TOP DRESSING, REPAIR AND/OR CLEANOUT OF ANY MEASURES USED TO TRAP SEDIMENT.

CURB INLET FILTER "PIGS IN BLANKET"

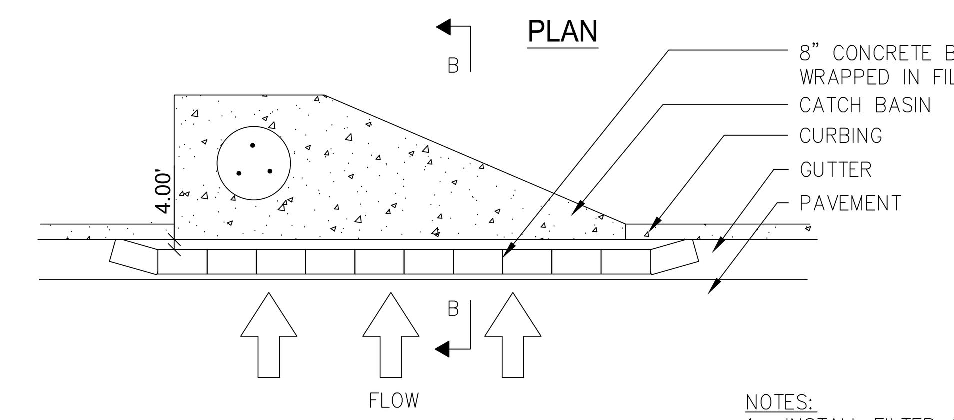

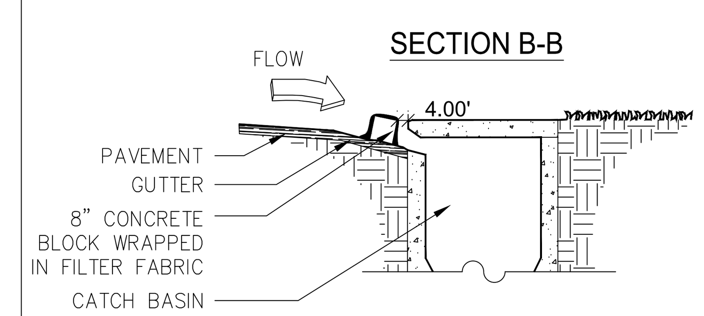

NOTES:
1. INSTALL FILTER AFTER ANY ASPHALT PAVEMENT INSTALLATION.
2. WRAP 8" CONCRETE BLOCKS IN FILTER FABRIC AND SPAN ACROSS CATCH BASIN INLET.
3. FACE OPENINGS IN BLOCKS OUTWARD.
4. LEAVE A GAP OF APPROXIMATELY 4 INCHES BETWEEN THE CURB AND THE FILTERS TO ALLOW FOR OVERFLOW TO PREVENT HAZARDOUS PONDING.
5. INSTALL OUTLET PROTECTION BELOW STORM DRAIN OUTLETS.

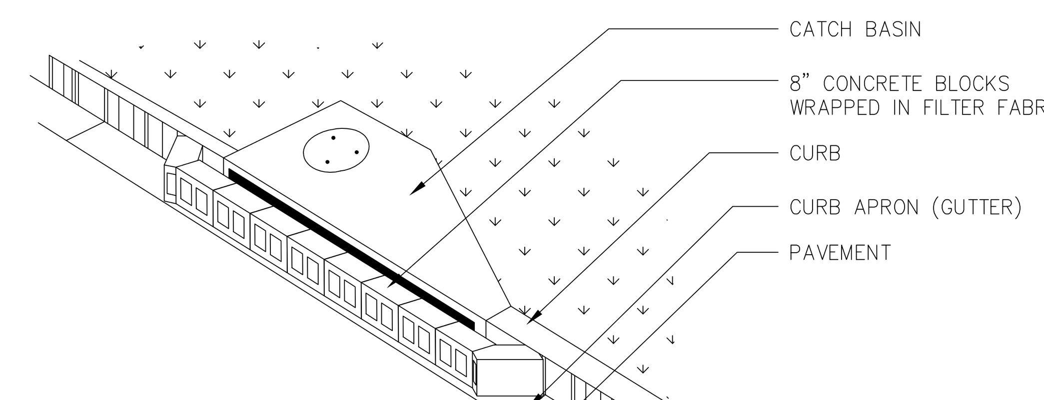

FABRIC AND SUPPORTING FRAME FOR INLET PROTECTION

STEEL FRAME AND SILT FENCE INSTALLATION

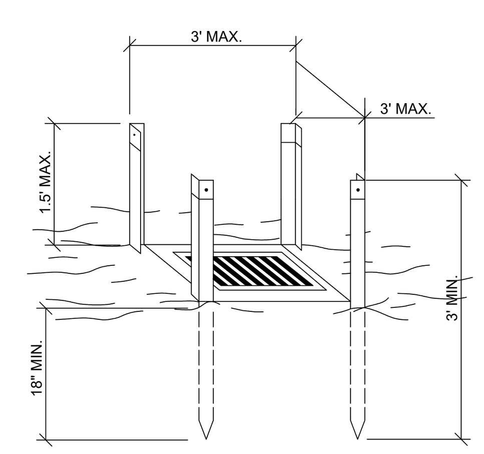

NOTES:
1. DESIGN IS FOR SLOPES NO GREATER THAN 5% (NOT DESIGNED FOR CONCENTRATED FLOWS).
2. THE STEEL POSTS SUPPORTING THE SILT FENCE MATERIAL SHOULD BE SPACED EVENLY AROUND THE PERIMETER OF THE INLET (MAXIMUM OF 3' APART).
3. THE STEEL POSTS SHOULD BE SECURELY DRIVEN AT LEAST 18" DEEP.
4. THE FABRIC SHOULD BE ENTRENCHED AT LEAST 12" AND THEN BACKFILLED WITH CRUSHED STONE OR COMPACTED SOIL.

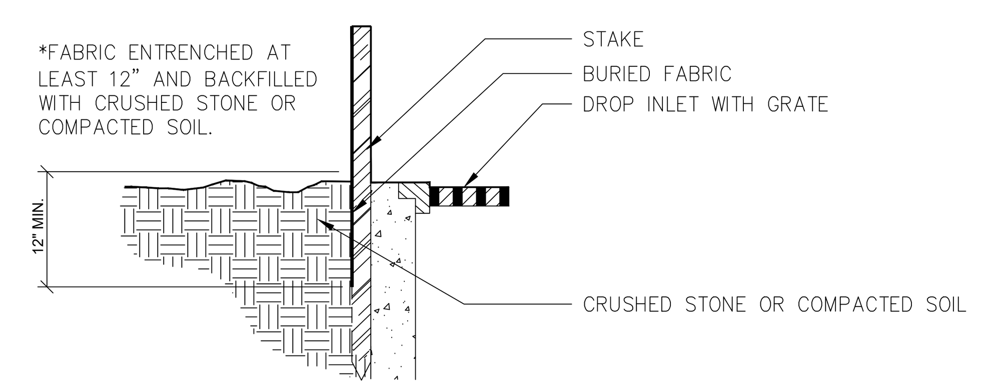

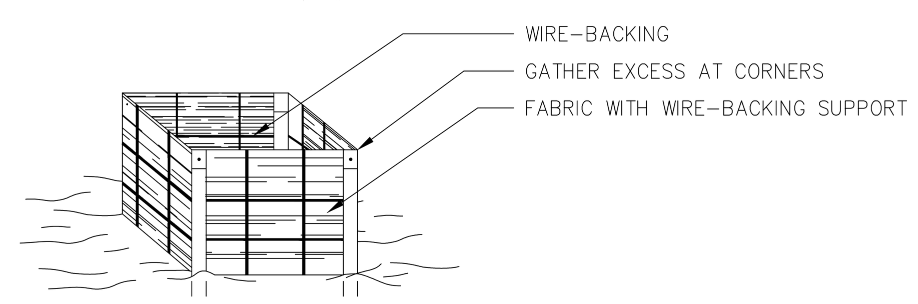

SILT FENCE - TYPE NON-SENSITIVE

SIDE VIEW

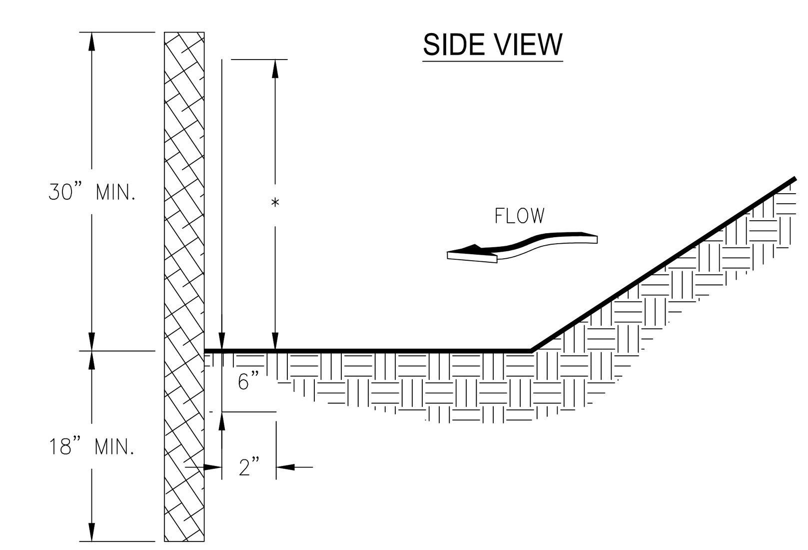

FRONT VIEW

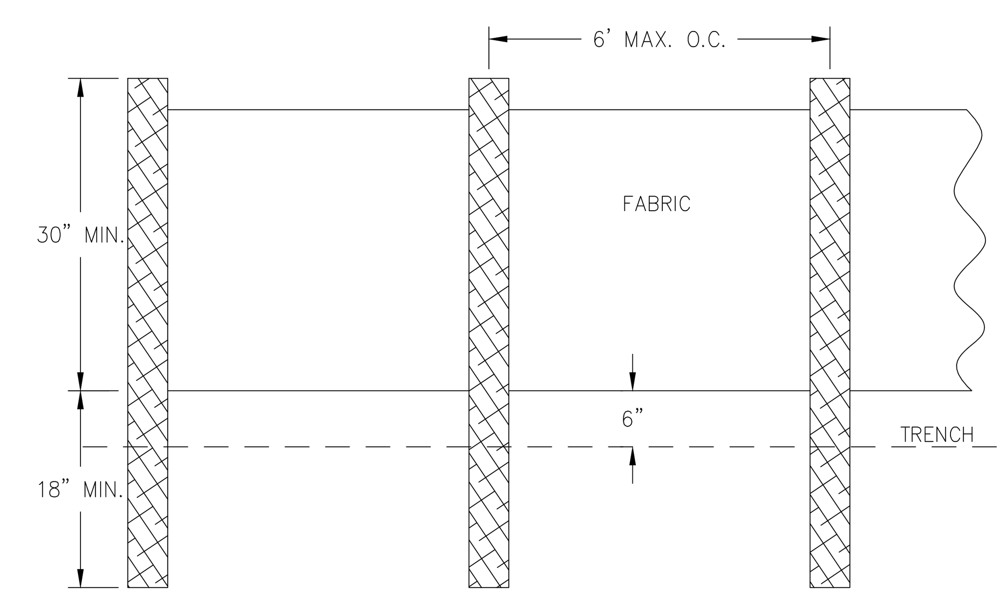

NOTES:
1. USE STEEL OR WOOD POSTS OR AS SPECIFIED BY THE EROSION, SEDIMENTATION, AND POLLUTION CONTROL PLAN.
2. HEIGHT (*) IS TO BE SHOWN ON THE EROSION, SEDIMENTATION, AND POLLUTION CONTROL PLAN.

GRANT SHEPHERD & ASSOCIATES, INC
Construction Layout • GPS
Modeling
Land Surveying • Site Development
735 LONGLEAF BOULEVARD, SUITE A LAWRENCEVILLE, GA 30046
PHONE: 770.418.9823 FAX: 770.418.9289
www.gsasurveying.com

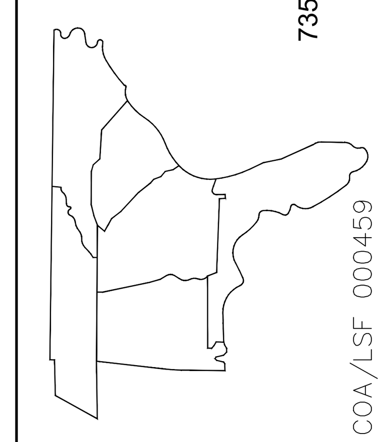

COA/LSF 000459

THE USE OF THIS DOCUMENT FORMAT IS STRICTLY PROHIBITED AND CONTINGENT UPON WRITTEN CONSENT AND PERMISSION OF GRANT SHEPHERD & ASSOCIATES, INC.

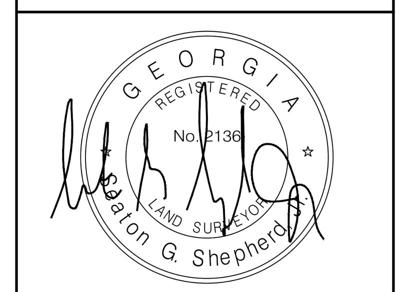

SKETCH PLAT
FOR
CHESTNUT TRACE PARK - AKA OHM AVENUE
PROPERTY LOCATED IN
LAND LOT 009 1ST SECTION, 18TH DISTRICT
298 OHM AVENUE AVONDALE
ESTATES, GA 30002
DEKALB COUNTY

EROSION DETAILS
1" = 20'
Unless Otherwise Noted
GSA Project No.
OHM AVENUE SKETCH
Drawn By / Field Crew
MRS/CW
LD / SANTY 10/22/19
Sheet No. 7.2 OF 9.1

Z:\Dwg2019\Ohm Ave Concept\953-13-017 Ohm Ave - Concept 3 - sketch plat.dwg

1. NO ONE SHALL ENCROACH, PLACE SOLVENTS, BUILDING MACHINERY, BUILDING DEBRIS OR ANY OTHER MATERIAL WITHIN 6' OUTSIDE THE PERIPHERY OF THE CRZ OR WITHIN ANY TREE SAVE AREA, TRANSITIONAL BUFFER ZONE, STREAM BUFFER, OR STATE BUFFER ZONE.

2. ALL TREE FENCE AND OTHER TREE PROTECTION DEVICES MUST REMAIN IN FUNCTIONING CONDITION UNTIL COMPLETION OF THE PROJECT OR UNTIL THE CO IS ISSUED

3. A TREE THAT IS DESIGNATED TO BE SAVED, BUT IS DAMAGED DURING CONSTRUCTION, SHALL BE REPLACED WITH 4" CALIPER TREES EQUAL TO THE UNIT VALUE OF THE TREE REMOVED. ANY SPECIMEN TREE DAMAGED SHALL BE REPLACED WITH 4" CALIPER TREES EQUAL TO 1.5 TIMES THE DBH OF THE DAMAGED SPECIMEN TREE.

1. ALL TREE PROTECTION AREAS TO BE PROTECTED FROM SEDIMENTATION.
2. ALL TREE PROTECTION DEVICES, INCLUDING CRITICAL ROOT ZONE (CRZ) PROTECTION, TO BE INSTALLED PRIOR TO THE START OF LAND DISTURBANCE, AND MAINTAINED UNTIL FINAL LANDSCAPING.
3. ALL TREE PROTECTION FENCING TO BE INSPECTED DAILY, AND REPAIRED OR REPLACED AS NEEDED.
4. NO PARKING, STORAGE OR OTHER CONSTRUCTION ACTIVITIES ARE TO OCCUR WITHIN TREE PROTECTION AREA (CRZ).

5. ALL REQUIRED VEGETATION MUST BE MAINTAINED FOR TWO GROWING SEASONS AFTER THE DATE OF FINAL INSPECTION.

4 - 4.0" MAGNOLIA LANDSCAPE PLANTING TREE

34 - 4.0" GINKGO LANDSCAPE PLANTING TREE

DENSITY FACTOR:
4 * 1.6 = 6.4
34 * 1.6 = 54.4
31 * .8 = 24.8
TOTAL: 85.6

31 - 2.5" TO 3.0" WILLOW OAK STREET PLANTING TREE

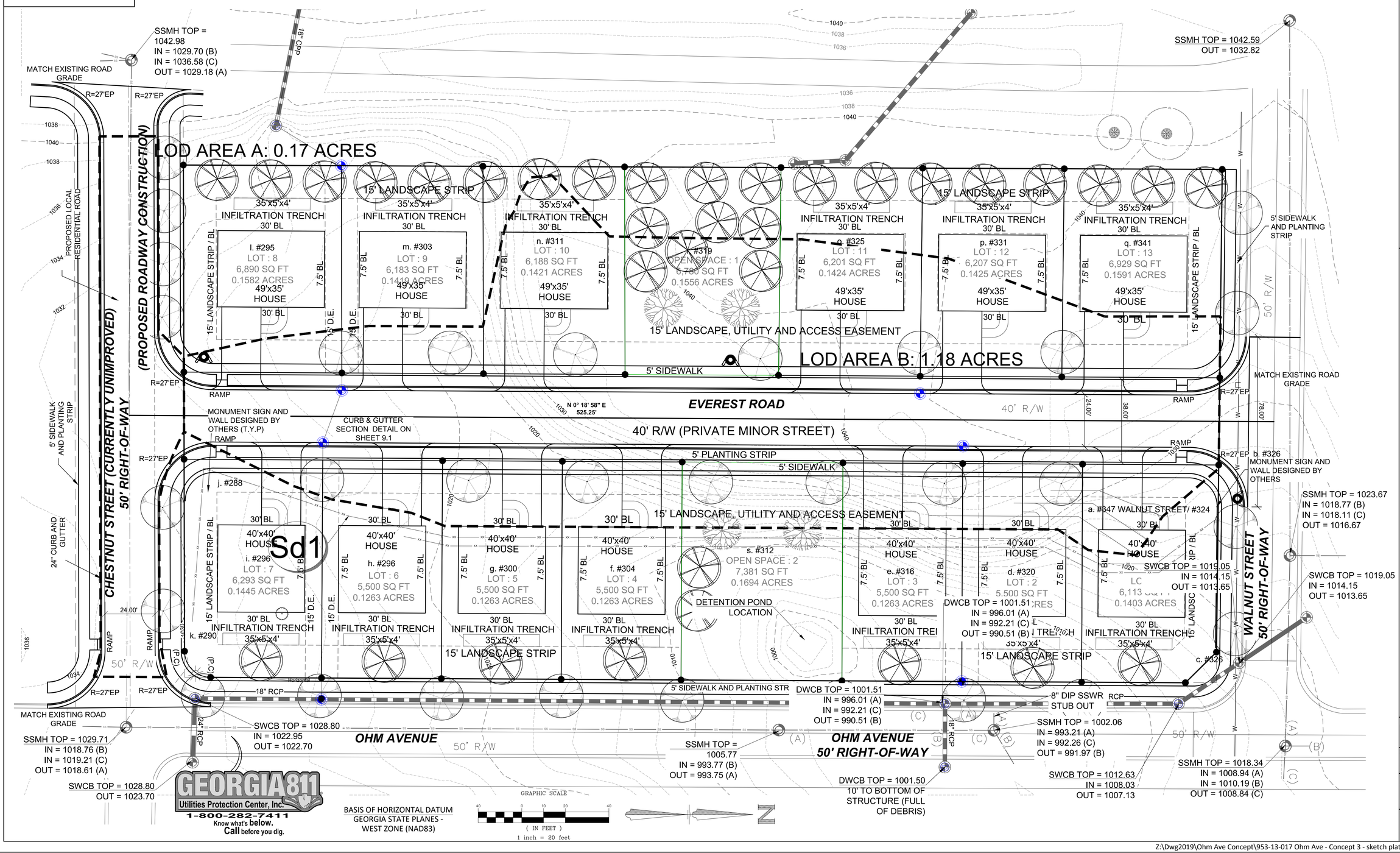

GRANT SHEPHERD & ASSOCIATES, INC.
Construction Layout GPS Modeling Site Land Surveying
735 LONGLEAF BOULEVARD SUITE A, LAWRENCEVILLE, GA 30046
PHONE: 770.418.9823 FAX: 770.418.9289
www.gsasurveying.com
COA/LSF 000459

THE USE OF THIS DOCUMENT FORMAT IS STRICTLY PROHIBITED AND CONTINGENT UPON WRITTEN CONSENT AND PERMISSION OF GRANT SHEPHERD & ASSOCIATES, INC.

GEORGIA REGISTERED No. 2136 LAND SURVEYOR Aaron G. Shepherd

SKETCH PLAT
FOR
CHESTNUT TRACE PARK - AKA OHM AVENUE
PROPERTY LOCATED IN
LAND LOT 009 1ST SECTION, 18TH DISTRICT
298 OHM AVENUE AVONDALE
ESTATES, GA 30002
DEKALB COUNTY

LANDSCAPE PLAN 1" = 20' *Unless Otherwise Noted*	
GSA Project No.	OHM AVENUE SKETCH
Drawn By / Field Crew	MRS/CW
LD / SANTY	10/22/19
Sheet No.	08 OF 9.1

Z:\Dwg2019\Ohm Ave Concept\953-13-017 Ohm Ave - Concept 3 - sketch plat.dwg

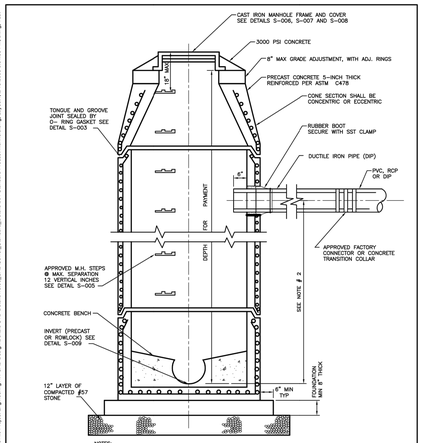

NOTES:

1. WHERE NECESSARY TO CONSTRUCT MANHOLE OVER EXISTING SEWER, 9" THICK CONCRETE POURED-IN-PLACE FOOTING/FOUNDATION MAY BE USED IN LIEU OF PRECAST BOTTOM SECTION.
2. WHERE DROP FROM INVERT OF MANHOLE TO INVERT OF INFLUENT PIPE(S) EXCEED 2'-0", AN OUTSIDE DROP CONNECTION SHALL BE REQUIRED EXCEPT WHEN DCDWM SPECIFICALLY APPROVES ITS ELIMINATION. SEE DETAIL S-002.
3. PRECAST ALL OPENINGS FOR PIPE IN BASE AND RISER UNITS.

DEKALB COUNTY, GA. Department of Watershed Management | STANDARD DETAILS | 12/07

Standard Precast Manhole

NOT TO SCALE | DETAIL NO. S-001

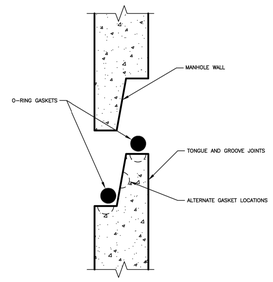

NOTE:

AFTER INSTALLATION JOINTS SHALL BE GROUTED SMOOTH WITH CEMENT GROUT ON INSIDE AND OUT.

DEKALB COUNTY, GA. Department of Watershed Management | STANDARD DETAILS | 12/07

Manhole Joint Detail

NOT TO SCALE | DETAIL NO. S-003

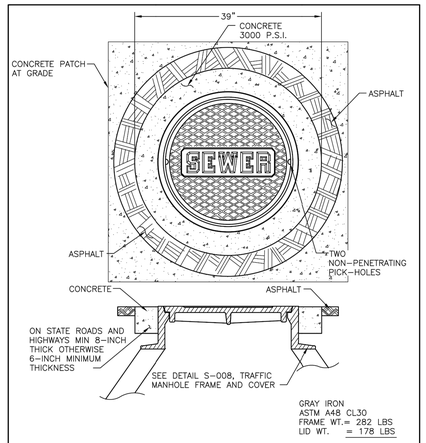

NOTE:

CONCRETE COLLARS ONLY REQUIRED IN STREETS, ROADWAYS AND OTHER AREAS SUBJECT TO VEHICULAR TRAFFIC.

DEKALB COUNTY, GA. Department of Watershed Management | STANDARD DETAILS | 07/08

Concrete Collar for Manhole Frame and Cover

NOT TO SCALE | DETAIL NO. S-006

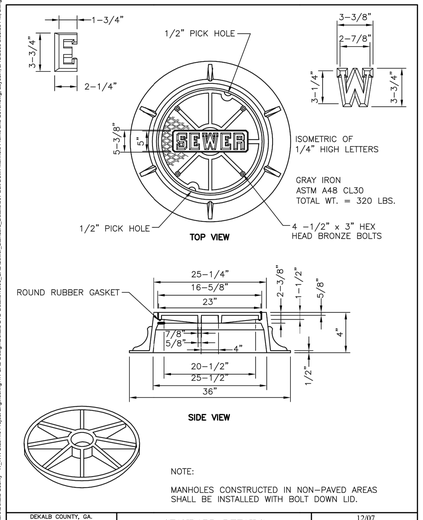

NOTE:

MANHOLES CONSTRUCTED IN NON-PAVED AREAS SHALL BE INSTALLED WITH BOLT DOWN LID.

DEKALB COUNTY, GA. Department of Watershed Management | STANDARD DETAILS | 12/07

Bolt Down Manhole Frame and Cover

NOT TO SCALE | DETAIL NO. S-007

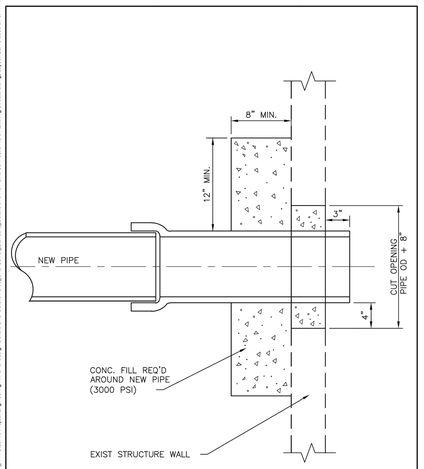

DEKALB COUNTY, GA. Department of Watershed Management | STANDARD DETAILS | 12/07

New Line Connection to an Existing Structure

NOT TO SCALE | DETAIL NO. S-010

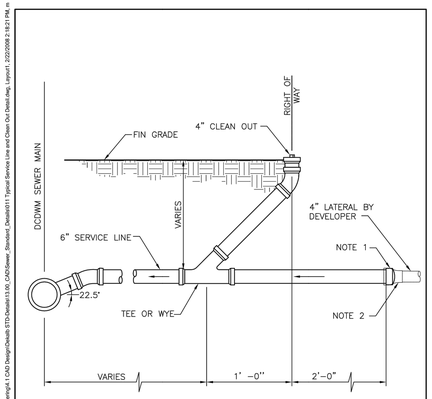

NOTES:

1. PLUG 6" SERVICE LINE IF SERVICE DOES NOT CONTINUE (HAND INSTALLED LOOSLY – NO SOLVENT)
2. CONNECT DEVELOPER'S 4" LATERAL TO 6" SERVICE LINE W/ 4" X 6" FERNCO COUPLING INCLUDING SST BANDS

DEKALB COUNTY, GA. Department of Watershed Management | STANDARD DETAILS | 12/07

Typical Service Line and Clean Out Detail

NOT TO SCALE | DETAIL NO. S-011

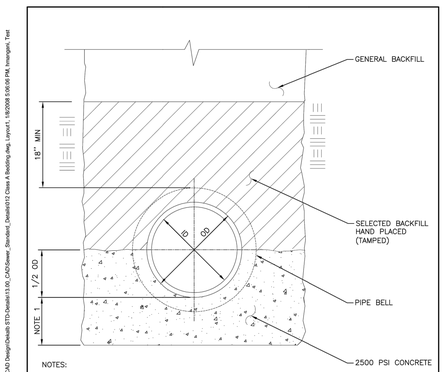

NOTES:

1. CONCRETE DEPTH BELOW PIPE:
   a.) PIPE DIAMETER UP TO 12":
      i.) EQUAL TO 1/2 TIMES THE OUTSIDE DIAMETER (OD)
      ii.) MINIMUM 6"
   b.) PIPE DIAMETER GREATER THAN 12":
      i.) EQUAL TO 1/4 TIMES THE OUSIDE DIAMETER (OD)
      ii.) MINIMUM 6"
   C.) MAXIMUM 12"

DEKALB COUNTY, GA. Department of Watershed Management | STANDARD DETAILS | 12/07

Class "A" Bedding

NOT TO SCALE | DETAIL NO. S-012

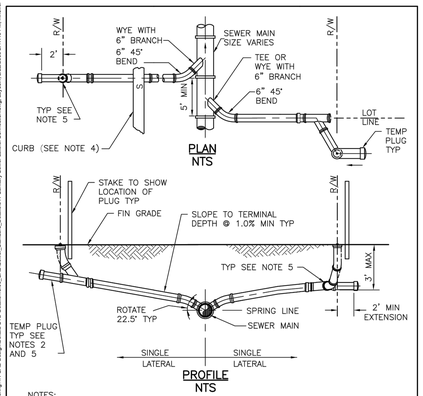

NOTES:

1. INVERT OF SERVICE LATERAL SHALL NOT ENTER SEWER MAIN BELOW SPRING LINE.
2. SERVICE LATERAL SHALL BE CAPPED BY DEVELOPER'S CONTRACTOR.
3. ALL FITTINGS SHOWN ARE TO BE INSTALLED.
4. SERVICE CONNECTIONS SHALL BE PERMANENTLY MARKED BY CUTTING AN "S" IN THE CURB DIRECTLY OVER THE LATERAL.
5. DEVELOPER'S CONTRACTOR WILL INSTALL CLEANOUT.

DEKALB COUNTY, GA. Department of Watershed Management | STANDARD DETAILS | 12/07

Sanitary Sewer Lateral Connection detail

NOT TO SCALE | DETAIL NO. S-017

GRANT SHEPHERD & ASSOCIATES, INC.
Construction Layout GPS
Modeling
Land Surveying
Site
735 LONGLEAF BOULEVARD SUITE A LAWRENCEVILLE, GA 30046
PHONE: 770.418.9823 FAX: 770.418.9229
www.gsasurveying.com
COA/LSF 000459

GEORGIA REGISTERED No. 2136 LAND SURVEYOR Aaron G. Shepherd

SKETCH PLAT
FOR
CHESTNUT TRACE PARK - AKA OHM AVENUE

PROPERTY LOCATED IN
LAND LOT 009 1ST SECTION, 18TH DISTRICT
298 OHM AVENUE AVONDALE
ESTATES, GA 30002
DEKALB COUNTY

DETAILS
1" = 20'
Unless Otherwise Noted

GSA Project No.
OHM AVENUE SKETCH

Drawn By / Field Crew
MRS/CW
LD / SANTY 10/22/19

Sheet No. 9.0 OF 9.1

GEORGIA811 Utilities Protection Center, Inc.
1-800-282-7411
Know what's below. Call before you dig.

THE USE OF THIS DOCUMENT FORMAT IS STRICTLY PROHIBITED AND CONTINGENT UPON WRITTEN CONSENT AND PERMISSION OF GRANT SHEPHERD & ASSOCIATES, INC.

Z:\Dwg2019\Ohm Ave Concept\953-13-017 Ohm Ave - Concept 3 - sketch plat.dwg

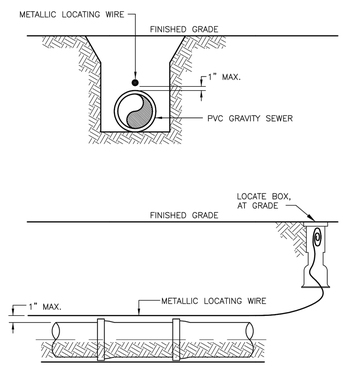

NOTES:
1. PVC PIPE SHALL REQUIRE INSULATED METALLIC LOCATING WIRE (12 GAUGE COPPER) CAPABLE OF DETECTION BY A CABLE LOCATOR
2. THE CABLE SHALL BE BURIED DIRECTLY ABOVE THE CENTERLINE OF THE PIPE. LOCATING WIRE SHALL TERMINATE AT THE MANHOLE FRAME
3. USE DUCT TAPE AS NECESSARY TO HOLD WIRE DIRECTLY ON THE TOP OF THE PIPE.

DEKALB COUNTY, GA.
Department of Watershed Management

STANDARD DETAILS

Tracer Wire Detail For PVC

NOT TO SCALE

12/07

DETAIL NO. S-025

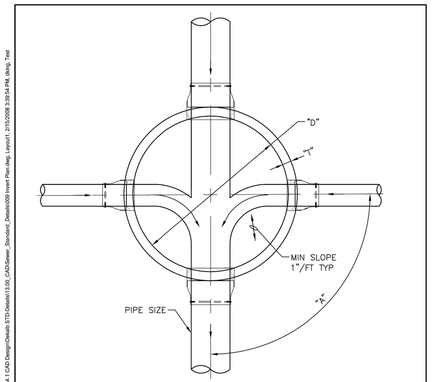

PIPE SIZE	"A"	"D"	"T"
6" & 15"	0' – 90'	4'–0"	5"
18"	0' – 60'	4'–0"	5"
18"	60' – 90'	5'–0"	6"
21" & 24"	0' – 60'	5'–0"	6"
21" & 24"	60' – 90'	6'–0"	7"

NOTE:
1. MINIMUM CENTERLINE RADIUS OF MANHOLE INVERT = 1.5 x PIPE DIAMETER

DEKALB COUNTY, GA.
Department of Watershed Management

STANDARD DETAILS

Invert Plan

NOT TO SCALE

12/07

DETAIL NO. S-009

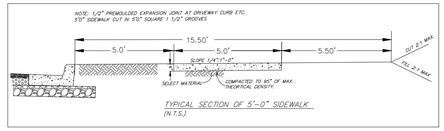

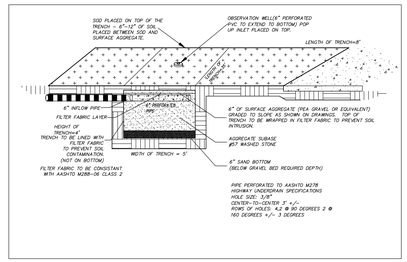

TYPICAL SECTION DETAIL

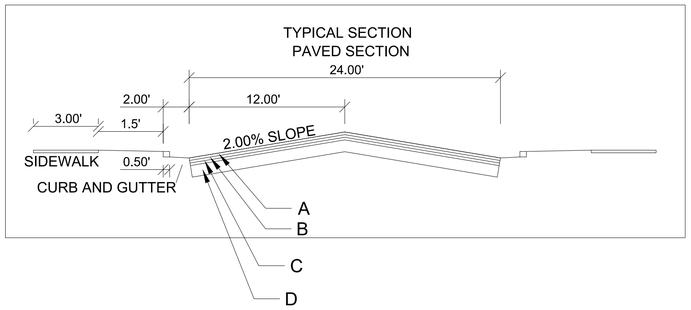

(A) 165 LB/SY RECYCLED ASPHALTIC CONCRETE 12.5 MM SUPERPAVE. GP 2 ONLY, INCL BITUM MATL & H LIME,

(B) 220 LB/SY RECYCLED ASPH CONC 19MM SUPERPAVE, GP 1 OR GP 2, INCL BITUM MATL & H LIME

(C) 330 LB/SY RECYCLED ASPH CONC 19MM SUPERPAVE, GP 1 OR GP 2, INCL BITUM MATL & H LIME

(D) 12" - GRADED AGGREGATE BASE INCL MATL

GEORGIA811
Utilities Protection Center, Inc.
1-800-282-7411
Know what's below.
Call before you dig.

GRANT SHEPHERD & ASSOCIATES, INC.
Construction Layout GPS
Modeling
Land Surveying
Site
735 LONGLEAF BOULEVARD SUITE A, LAWRENCEVILLE, GA 30046
PHONE: 770.418.9823 FAX: 770.418.9289
www.gsasurveying.com

COA/LSF 000459

GEORGIA REGISTERED No. 2136 LAND SURVEYOR Aaron G. Shepherd

SKETCH PLAT
FOR
CHESTNUT TRACE PARK - AKA OHM AVENUE
PROPERTY LOCATED IN
LAND LOT 009 1ST SECTION, 18TH DISTRICT
298 OHM AVENUE AVONDALE
ESTATES, GA 30002
DEKALB COUNTY

DETAILS
1" = 20'
Unless Otherwise Noted

GSA Project No.
OHM AVENUE SKETCH

Drawn By / Field Crew
MRS/CW
LD / SANTY 10/22/19

Sheet No. 9.1 OF 9.1

THE USE OF THIS DOCUMENT FORMAT IS STRICTLY PROHIBITED AND CONTINGENT UPON WRITTEN CONSENT AND PERMISSION OF GRANT SHEPHERD & ASSOCIATES, INC.