DeKalb County

Department of Watershed Management

Potable Water Main, Gravity Sanitary Sewer, and Sanitary Sewer and Force Main Design Standards

2009 Edition, Version 1.0

Created for:
DeKalb County DWM
1580 Roadhaven Drive
Stone Mountain, Georgia 30083
(770) 414-2383

Prepared by:
HDR Engineering, Inc.
301 Perimeter Center N, #400
Atlanta, Georgia 30346
(678) 775-4800

DeKalb County Department of Watershed Management

Potable Water Main, Gravity Sanitary Sewer, and Sanitary Sewer and Force Main Design Standards

2009 Edition, Version 1.0

Created for:

DeKalb County
Department of Watershed Management
1580 Roadhaven Drive
Stone Mountain, Georgia 30083
(770) 414-2383

Prepared by:

HDR Engineering, Inc.
301 Perimeter Center North, Suite 400
Atlanta, Georgia 30346
(678) 775-4800

TABLE OF CONTENTS

I. Purpose Statement 1
II. Potable Water Main Standards 2
A. Review and Approval Process 2
B. Submittal Requirements 2
1. General 2
2. Information to be Shown 2
3. Fireline Requirements 3
C. Design Criteria 4
1. Location 4
2. Size 5
3. Depth of Pipe Burial 5
4. Special Design Considerations 5
5. Separation from Non-Potable Conveyance Systems 6
6. Separation from Other Potential Sources of Contamination 7
7. Cross-Connection Control Protection 7
8. Appurtenant Design Considerations 9
9. Design of Water Mains within GDOT Right-of-Way 11
D. Construction Materials and Installation 12
1. General 12
2. Acceptable Materials 12
3. Trench Excavation 20
4. Removal of Water 21
5. Sheeting and Shoring 22
6. Bedding 23
7. Pipe Handling 23
8. Pipe Laying 24
9. Tapping of Existing Mains 25
10. Backfilling Trenches 26
11. Restoration of Pavements, Sidewalks, and Curbs 28
12. Seeding / Sod Replacement, add temporary 33
13. Maintenance of Traffic 37
14. Bore and Jack 38
15. Work within GDOT Right-of-Way 39
E. Construction Oversight 39
1. General 39
2. Inspection Prior to Installation 40
3. Final Inspection 40
F. Testing 40
1. Pressure and Leakage Testing 40
2. Disinfection 42
3. Microbiological Test 43
G. Final Approval 43
1. General 43

2. Construction Completion Form 43
3. Record Drawings 43
4. Guarantee of Work 44
III. Gravity Sanitary Sewer Standards 45
A. Review and Approval Process 45
B. Submittal Requirements 45
1. General 45
2. Information to be Shown 45
C. Design Criteria 47
1. Location 47
2. Size 50
3. Depth of Pipe Burial 52
4. Slope of Gravity Sanitary Sewer 53
5. Special Design Considerations 54
6. Separation from Potable Water Sources 55
7. Appurtenance Design Consideration 56
8. Design of Gravity Sanitary Sewer within GDOT Right-of-Way 57
D. Construction Materials and Installation 58
1. General 58
2. Acceptable Materials 59
3. Trench Excavation 61
4. Removal of Water 62
5. Sheeting and Shoring 62
6. Bedding 63
7. Pipe Handling 65
8. Pipe Laying 65
9. Sewer Service Installation 67
10. Sanitary Manhole Installation 69
11. Backfilling Trenches 74
12. Restoration of Pavements, Sidewalk, and Curbs 76
13. Seeding / Sod Replacement 79
14. Maintenance of Traffic 83
15. Bore and Jack 84
16. Work within GDOT Right-of-Way 86
E. Construction Oversight 87
1. General 87
2. Inspection Prior to Installation 87
3. Final Inspection 87
F. Testing 88
1. Visual Test 88
2. Air Test 88
3. CCTV Testing 89
4. Inflow/Infiltration 89
5. Deflection Test (All PVC Sewers) 90
6. Manhole Testing 90

G. Final Approval 91
1. General 91
2. Construction Completion Form 91
3. Record Drawings 91
4. Guarantee of Work 92
IV. Sanitary Sewer Pumping Station and Force Main Standards 93
A. Review and Approval Process 93
1. General 93
2. Allowable Use of Pump Station Facilities 93
3. Pump Station Conceptual Review and Approval Process 93
4. Pump Station Design Review and Approval Process 94
5. Pump Station Acceptance by DCDWM Process 94
6. Recommendations for Ordering Equipment and Utility Sources 96
B. Submittal Requirements 96
1. General 96
2. Pump Station Conceptual Review and Approval Submittal 97
3. Pumping Station Design Review and Approval Submittal 97
4. Pump Station Acceptance by DCDWM Submittal 98
5. Force Main Information to be Shown 99
C. Design Criteria 100
1. Pump Station Service Area Map 100
2. Design within GDOT ROW 100
3. Calculation of Sanitary Flows 101
4. Determination of Receiving Sewer Capacity 105
5. Calculation of System Head Curve 105
6. Pump Selection Process 107
7. Wet Well Design 108
8. Overflow Vault Design 112
9. Valve and Meter Vault Design 113
10. Force Main Design 114
D. Construction Materials and Installation 116
1. General Requirements 116
2. Site Work 121
3. Concrete 136
4. Pump Station Pad 137
5. Wet Well and Accessories 138
6. Overflow Vault 144
7. Valve and Meter Vault 146
8. Pumps 146
9. Hoist 151
10. Piping 152
11. Bore and Jack for Force Mains 158
12. Valves and Appurtenances 159
13. Pressure Gauge 163
14. Flow Meter 163

15. Electrical Power and Distribution 164
16. Generator 166
17. Telemetry 169
18. Enclosures 170
19. Instrumentation and Controls 171
E. Construction Oversight 176
1. General 176
F. Testing 176
1. Pressure and Leakage Testing 176
2. Industrial Wastewater Sampling 177
G. Final Approval 177
1. General 177
2. Force Main Construction Completion Form 177
3. Record Drawings 177
4. Guarantee of Work 178

Appendices

Appendix A: General: Reference Material
Appendix B: Potable Water Standard: Reference Material
Appendix C: Digital File and CADD Requirements
Appendix D: Potable Water: Standard Details
Appendix E: Georgia Department of Transportation: Reference Material
Appendix F: Potable Water Standard: Forms
Appendix G: General: Forms
Appendix H: Gravity Sanitary Sewer Standard: Reference Material
Appendix I: Gravity Sanitary Sewer: Standard Details
Appendix J: Gravity Sanitary Sewer Standard: Forms
Appendix K: Sanitary Sewer Pumping Station and Force Main Standard: Reference Material
Appendix L: Sanitary Sewer Pumping Station and Force Main Standard: Forms
Appendix M: Sanitary Sewer Pumping Station and Force Main Standard: Details
Appendix N: Sanitary Sewer Pumping Station: Example Pump Station Design Review and Approval Form

I. PURPOSE STATEMENT

The "Potable Water Main, Gravity Sanitary Sewer, and Sanitary Sewer Pumping Station and Force Main Design Standards" consists of current policies and procedures of the DeKalb County Department of Watershed Management (DCDWM). Included herein are design criteria, submittal policies, construction requirements, inspection and acceptance procedures, Standard details, and other pertinent information. These revised Standards become effective on **DATE TO BE PLACED BY DCDWM** and replace all previous versions and revisions.

The "Potable Water Main, Gravity Sanitary Sewer, and Sanitary Sewer Pumping Station and Force Main Design Standards" were created to provide design information for both DCDWM capital improvement projects and private development projects. These Design Standards provide construction guidance, specifications, policies, procedures and other information necessary to construct water and sewer system improvements that meet all requirements set by DCDWM.

Project design shall follow the most current version of the "Potable Water Main, Gravity Sanitary Sewer, and Sanitary Sewer Pumping Station and Force Main Design Standards"; changes, revisions, additions, and/or corrections can be made at any time without prior notification. The Developer's Design Engineer is responsible for ensuring that the project meets the latest requirements of these Design Standards.

The Sanitary Sewer Pumping Station and Force Main Standards are to be used for pumping station with pumps up to one thousand (1,000) pounds (lbs) and for force mains up to six (6) inches in nominal diameter. Pumping stations and force mains beyond these criteria do not fall within the guidelines of these Standards. The ROMTEC packaged pumping station design follows the requirements of these Standards, has been approved by DeKalb County, and may be specified by the Developer/Contractor.

II. POTABLE WATER MAIN STANDARDS

A. Review and Approval Process

Design plans shall be submitted to the DeKalb County Department of Planning and Development (DCDPD) for review and approval. All submittals and re-submittals and retrievals of approval are processed by the DCDPD. DCDPD is located at 330 West Ponce de Leon Avenue, Decatur, Georgia, 30030 and can be reached at (404)371-2518. The design plan review process Flow Chart is presented in Appendix A.

A "Water Distribution System Plan Checklist" has been provided in Appendix B.

B. Submittal Requirements

1. General

Four (4) sets of 24"x36" design drawings and one (1) electronic copy on compact disc (CD) (in MicroStation V8 and PDF formats) of design drawings shall be submitted. MicroStation electronic files shall follow the format and requirements presented in Appendix C: Digital File and CADD Requirements.

The plan set shall also include a legend depicting symbols used in the drawings, general notes pertinent to DCDWM requirements, and DCDWM standard details used within the plan set.

2. Information to be Shown

The title block presented on each sheet shall include the name of the development; phase or unit of development (if applicable); Land Lot and District; name, address and phone number of Developer and Developer's design engineer; and Professional seal of Developer's design engineer with signature.

A cover sheet shall be included with a drawing index. The cover sheet shall also include an approval block for DCDPD signature. Cover sheet shall include a location map with north arrow.

a) *Plan View*

Plan view shall have a scale of not more than fifty (50) feet to the inch [1" = 50']. Show location, size and material of construction of all proposed pipelines within the project area. The proposed water mains shall be shown on the plans as solid lines with size, material, and pipe class called out; for example "8-inch DIP (WM) – Class 51". Show all hydrants, valves, meters, blow-off valves, etc. All plan view sheets shall include a north arrow. A table shall be provided in the plans identifying the coordinates for each water meter to be installed on the project. An example table is provided below.

Lot #	Water Meter #	Northing	Easting
5	108	672910	476292
6	109	543198	354328

Identify all lots served by the new distribution mains within the plats or subdivisions under the project scope of work.

Plans shall show all other buried existing or proposed utilities, including storm and sanitary sewers, drywells, buried telephone, natural gas, power, and cable TV lines, within the project area that are concurrent with water main construction. Existing utilities should be shown to the extent known given records available to the Developer's Design Engineer. Existing utilities shall be shown as dashed lines. Construction details should note that all buried utilities are to be field located prior to construction.

Plans shall show the tie-in point(s) of the proposed system to the DCDWM existing system. Plans shall include typical construction details of all tie-ins to existing pipelines; typical trench cross-sections including bedding, backfill, and compaction requirements; fire hydrant; thrust restraint or blocking; and service connection details. Potable water main standard details are provided in Appendix D.

A chlorination tap shall be indicated on the plans approximately three (3) to five (5) feet from the beginning of the project or as close as possible to the tap valve or connection point. Separate project "phases" must have chlorination taps indicated for each phase.

b) *Profile View*

Generally profiles are not required for plan submittals on water mains smaller than sixteen (16) inches in diameter; however, special project considerations may require profiles for a portion of the project. Profiles are required for water mains sixteen (16) inches and larger. Profiles or crossing details with a vertical scale of not more than ten (10) feet to the inch should be considered where pipeline projects encounter areas of numerous utilities that cannot be easily located, such as storm and sanitary sewers, and that have potential conflicts with the proposed water main(s). Profiles should also be provided for pipelines proposed through a streambed or crossing GDOT right-of-way.

3. Fireline Requirements

Four (4) sets of site plans shall be submitted to the DCDPD for fireline review. One (1) set will be sent by DCDPD to the Fire Marshall's office for their stamped approval. Plans approved by the Fire Marshall's office are sent to the DCDWM. DCDWM will approve or reject plans and will set the fireline fees to be paid. Contact DCDWM, at (770)724-1411 prior to any fireline work commencement on the project.

Plan sets approved by the Fire Marshall's office and DCDWM will be sent back to the DCDPD. Once the readiness to serve fee has been paid, a copy of the receipt will be sent to DCDWM and a hard copy of the work release will be given to the fireline inspector along with a copy of the approved plans.

A pre-construction meeting with the fireline inspector must take place before any fireline work may begin.

If a Developer or Contractor fails to complete any of these procedures they may be asked to uninstall or expose any unapproved fireline to ensure it is in compliance with these Design Standards.

Fireline submittal must include the following information:

1. Name, address, and phone number of the developer or owner.
2. Name of entity or person responsible for costs relating to fireline installation along with the name, address and phone number of the local twenty-four hour contact person.
3. District and land lot of project.
4. Scale of drawing; include a graphic scale.
5. Name and address of project.
6. Street name, existing water main location, material and size of the water main.
7. Size of fireline and total linear foot for each size of line and location.
8. Size and location of water meter, if required. (Water meter must be purchased so installation will coincide with installation of fireline.)

Where a GDOT utility permit is required, the location of the connection to DCDWM utilities is subject to change, if so required by GDOT.

C. Design Criteria

1. Location

DCDWM's standard location for water main placement shall be as follows:

- For subdivisions, the proposed water main shall be located on the north side of east-west streets, and on the east side of north-south streets.
- For existing county roads, the proposed water main will generally be located five (5) feet inside the right-of-way. For existing GDOT roads, the proposed water main **must** be located five (5) feet inside the right-of-way. Unusual circumstances such as embankments, obstructions, other utilities, etc. may warrant deviation.
- For private developments/subdivisions the proposed water main shall be located four (4) feet from the back of the curb.

- For non-subdivision streets, the proposed water main shall be located on that side of the road as determined by any existing lines to be tied into at the beginning and/or end of the project.
- For non-subdivision streets, the location may also be determined by existing rights-of-way, or lack thereof. Water mains must be installed within deeded rights-of-way. Installations within "prescriptive" easements are not permitted.
- For non-subdivision streets, generally avoid a location on the same side of the road as gas lines. In projects where any existing gas lines have "active" cathodic protection for corrosion prevention, the proposed water main must be installed on the opposite side of the road, and may require additional protective measures as specified by DCDWM.
- For non-subdivision streets, where none of the above governs, the proposed water main shall be located on the side of the road that has the fewest conflicts, i.e. rock outcroppings, trees, side roads, fences, structures, involved landscaping, embankments, prescriptive easements, etc. **NOTE: Water main location must maintain ten (10) feet horizontal separation from existing parallel sanitary sewer mains, and three (3) feet vertical separation from any existing perpendicular crossing of sanitary sewer mains unless with special protection approved by DCDWM**.

2. Size

Unless otherwise specified by DCDWM, water mains serving single-family residential developments shall have a minimum diameter of eight (8) inches. Water mains serving commercial areas shall have a minimum diameter of twelve (12) inches. If adequate volumes for fire flow requirements and pressures are not available at the point of connection, a larger main and/or additional improvements may be required. Determination of volume or pressure inadequacy will be hydraulically modeled and calculated utilizing fire flow test results obtained by fireline crews that installed the hydrants and performed the pressure test, and shall be at the sole discretion of the developer.

3. Depth of Pipe Burial

Water mains outside of paved areas and under paved areas shall have a minimum cover of four (4) feet.

4. Special Design Considerations

a) *Freeze Protection*

Protection from freezing should be provided for pipes above ground (such as bridge crossings).

b) *Thrust Restraint*

Pipe thrust restraints need to be considered for pipelines above ground as well. Thrust restraint installation with tie-rod is provided in Standard Detail W-022, Appendix D. Thrust blocking underground should be considered whenever pipe

changes direction (tees and bends) and where unbalanced thrust forces (pressure and momentum) exist. Thrust blocking details are provided in Appendix D, Standard Details W-009, W-010, and W-011.

c) *Cathodic Protection*

Cathodic protection of ductile iron pipe should be considered whenever corrosive soils or stray current may occur from MARTA or Atlanta Gas Light (AGL) facilities.

5. Separation from Non-Potable Conveyance Systems

a) *Horizontal and Vertical Separations*

Potable water mains shall maintain a ten (10) feet horizontal and eighteen (18) inches vertical clearance from non-potable pipelines (i.e. sanitary sewers, reclaimed water piping, etc.). Measurement shall be from outside of pipe to outside of pipe. If site conditions do not allow such minimum separations, DCDWM may allow deviation on a case-by-case basis, if supported by data from the Developer's Design Engineer. Such deviation may allow installation of the water main closer to a non-potable line, provided the water main is in a separate trench or on an undisturbed earth shelf located on one side of the non-potable line and at an elevation such that the bottom of the water main is at least eighteen (18) inches above or below the top of the non-potable line.

If it is impossible to obtain proper horizontal and vertical separation as described above, both the water and non-potable line must be constructed of ductile iron pipe meeting DCDWM standards and shall be pressure tested to two hundred (200) psi to assure water-tightness prior to backfilling.

b) *Crossings*

Water mains crossing over or under non-potable lines shall be laid to provide a minimum vertical distance of eighteen (18) inches between the outside of the water main and the outside of the non-potable line. The crossing shall be arranged so that the non-potable line joints will be equidistant and as far as possible from the water main joints. Where a water main crosses under a non-potable line, adequate structural support shall be provided for the non-potable line to maintain line and grade.

When it is impossible to obtain the proper vertical separation as stipulated above, one of the following methods must be specified:

- The non-potable line shall be designed and constructed equal to water pipe, and shall be pressure tested to two hundred (200) psi to assure water tightness.
- Either the water main or the non-potable line may be encased in a watertight carrier pipe or concrete encasement which extends ten (10) feet on both sides of the crossing, measured perpendicular to the water main. The carrier pipe

shall meet the material requirements of steel casing for bore and jack crossings.

6. Separation from Other Potential Sources of Contamination

Installation of water mains near other potential sources of contamination or any other facility, where the failure of the facility would subject the water main to toxic chemical or pathogenic contamination, should be thoroughly evaluated by the Developer's Design Engineer on a case-by-case basis. Other potential sources of contamination include sites such as storage ponds, land disposal sites for wastewater or industrial process water containing toxic materials or pathogenic organisms, and solid waste disposal sites.

If a pipeline needs to be laid in an area with contaminated soils, certain precautions should be taken. Research has shown that certain pipe materials and elastomers (such as those used in jointing gaskets and packing glands) may be susceptible to permeation by lower-molecular-weight organic solvents or petroleum products. The Developer's Design Engineer should consult with DCDWM, the manufacturer, and the State of Georgia Environmental Protection Division (EPD) before selecting materials for use in that area.

7. Cross-Connection Control Protection

a) *Purpose*

The purpose of the cross-connection control program is to protect the quality of water delivered to the customer (at the service connection), from contamination through cross-connections with other non-potable water or other liquids conveyed through piping.

b) *Requirements*

Under the authority of Section 25-27 and 25-34 of the DeKalb County Code, it is required that a backflow prevention device be installed on each connection to the DCDWM water distribution system, to protect against the possibility of a contaminated backflow into the DCDWM water system. All new development and construction projects are required to have backflow prevention device(s) installed on domestic, fireline and irrigation services.

Commercial customers are responsible for the cost of installation, testing (backflow devices must be tested annually), maintenance, and repair of all backflow prevention device(s) used for containment at the service-meter connection(s) and within their own private system(s).

There are two (2) types of basic backflow devices that are approved for commercial properties within DeKalb County. For water connections to facilities with low hazard potential, facilities such as attorneys' offices, general office buildings, and general stores, require the installation of Double Check Valve Assemblies (DCV); see Standard Details W-012, W-013, and W-016 in Appendix

D. Water connections to facilities with high hazard potential, such as animal clinics, animal grooming shops, car wash facilities, medical and dental buildings, and irrigation systems, requires the installation of Reduced Pressure Zone Assemblies (RPZ), see Standard Details W-014 and W-015 in Appendix D. The two lists below indicate specific facilities that require double check valves and reduced pressure zones; respectively.

Facilities that Require DCV:

1. Auxiliary Water Systems (non-interconnected)
2. Beverage Bottling Plants
3. Breweries
4. Buildings greater than three (3) stories or thirty-four (34) feet in height
5. Buildings with booster pumps or potable water storage
6. Dairies and cold storage plants
7. Food Processing
8. High Schools and Colleges
9. Sanitariums, rest and convalescent homes
10. Mobile Home Parks
11. Shopping Centers (Call Cross Connection Specialist)

Facilities that Require RPZ:

1. Air Craft and Missile Plants
2. Animal Clinics, Animal Grooming Shops
3. Automotive Repair with Steam and/or Acid Cleaning Equipment or Solvent Facilities
4. Auxiliary Water Systems (interconnected)
5. Canneries, Packinghouses, and Reduction Plants
6. Car Wash Facilities
7. Centralized Heating and Air Conditioning Plants
8. Chemical Plants
9. Chemically Treated Potable or Non-potable Water Systems
10. Civic Works (Government-owned or Operated Facilities not open for inspection by the DCDPW).
11. Commercial Laundries
12. Dye Works
13. Film Processing Labs
14. Holding Tank Disposal Stations
15. Hospitals and Mortuaries
16. Medical and Dental Buildings
17. Irrigation Systems with Chemical Injections
18. Irrigation Systems
19. Labs Using Contaminating Materials

20. Manufacturing, Processing and Fabricating Plants Using Contaminating Materials
21. Motion Picture Studios
22. Oil and Gas Production Facilities
23. Plating Plants
24. Power Plants
25. Radioactive Materials Processing
26. Restricted, Classified or other Closed Facilities
27. Rubber Plants
28. Sand and Gravel Plants
29. Sewage and Storm Drainage Facilities
30. Shopping Centers (Call Cross Connection Specialist)
31. Any premises where a cross-connection is maintained
32. Water trucks, Hydraulic Sewer Cleaning Equipment (or RPZ or Air Gap, call Cross Connection Specialist)

All backflow prevention assemblies shall be tested at the time of installation and at least annually thereafter. Contact Cross-Connection Control Specialists, at (770)414-2354 or (770)621-3524, for installation inspections and a list of the Testers that approved to test these devices in DeKalb County. A copy of the "Backflow Prevention Device Test and Maintenance Report" is provided in Appendix F.

8. Appurtenant Design Considerations

a) *Valve Placement*

Valves on distribution mains with diameters of twelve (12) inches or less should be located a minimum of every one thousand (1,000) feet. Generally, there should be two (2) valves on every non-hydrant tee and three (3) valves on every cross.

b) *Air Release Valves*

High points of distribution or transmission lines should have air release valves. The air release valve assembly is presented in Standard Detail W-023, Appendix D.

c) *Fire Hydrants, Firelines, Flushing Valves, and Blowoffs*

Fire hydrants shall be spaced every five hundred (500) feet in rural areas, every four (400) feet in residential areas, and every three (300) feet in commercial areas or as determined by the DeKalb County Fire Marshall.

Each fire hydrant shall be installed utilizing a fire hydrant tee and six (6) inch isolation valve, and shall be so identified on the plan.

Blowoffs or hydrants should be installed at low points and dead ends in the distribution system to allow for sufficient flushing and proper disinfection of the

water main. They should be designed to achieve a minimum velocity of two and one half (2.5) feet per second (fps) in the main for scouring purposes. See the blowoff assembly Standard Detail W-020 in Appendix D.

Where possible, place a fire hydrant near the end of each main. Where this is not feasible due to spacing requirements, provide a one (1) inch blow-off on eight (8) inch diameter mains and a two (2) inch blow-off on twelve (12) inch and larger diameter mains, for use in flushing (see Standard Detail W-020, Appendix D). A one (1) inch blow-off assembly on an eight (8) inch water main shall achieve a flushing velocity of one hundred sixty (160) fps and a two (2) inch blow-off on a twelve (12) inch water main shall achieve a flushing velocity of ninety (90) fps. Blow-off assemblies shall be installed with freeze protection.

A backflow prevention device is required on all firelines.

All existing fire hydrants on mains to be abandoned as part of the submitted project are to be labeled as follows: "Existing fire hydrant to be salvaged and returned by Contractor to DCDWM Roadhaven Facility."

d) *Sampling Stations*

If requested by the County, lockable sampling stations shall be installed at locations as directed. A standard sampling station is provided in Standard Detail W-028, Appendix D.

e) *Angle, Curb or Meter Stops*

Separate, angle, curb, or meter stops for each service connection shall be installed. Reference service and meter installation Standard Details W-008 and W-026, Appendix D.

f) *Private Firelines*

Privately owned firelines are subject to review and approval by DCDWM. The Fire Marshall shall approve the size and flow requirements for the fireline. DCDWM shall determine the Tapping Fee and the Fireline Fee including inspection of the construction; see Section II.A.4. Private firelines shall be constructed of ductile iron pipe as specified in Section II.D.2.

g) *Meter Locations*

All meters shall be located in green space. Meters shall not be located within driveways, sidewalks, or other paved areas. A three (3) feet by three (3) feet area of green space shall be allotted for each water meter; this will allow for the proper maintenance or replacement of meters. Meters for condos and individually metered high rise apartments shall be placed into a meter bank. Ensure that DCDWM has access to all meters and meter banks to enable shut off of service. Final grade is to be achieved prior to meter installation; orange cards provided by DCDWM shall be placed on stakes to mark where the meters are to be installed in the field. If, for any reason, the orange cards are not received from DCDWM

pieces of cardboard with the words "WATER METER" shall be placed on stakes to mark the desired location of the meter to be installed. Follow water meter location Standard Detail W-025 in Appendix D.

h) *Vaults*

Vaults shall have only one (1) line entering and leaving the structure. For example, fire and domestic or irrigation services shall be located in separate vaults.

9. Design of Water Mains within GDOT Right-of-Way

If any portion of a proposed project enters a State of Georgia controlled right-of-way, then a GDOT permit application is required. Developer or Owner shall submit to DCDWM the required material in hard copy and in electronic form, on a CD. Hard copy forms, permits, and drawings, etc. must be 8 ½" X 11", drawings need not be to scale. All measurements necessary for the permit application must be submitted in English. Generally, portions of the project design can be reduced in size and matchlined, if necessary, as long as the text is still legible. Compaction notes indicating compaction requirements must be included on every construction drawing required for the application (see Section II.D.10 Backfilling Trenches for backfill requirements). Submittal shall include four (4) each of the following: plan, profile, traffic control plan, and section from GDOT County map. The GDOT Permitting Checklist is provided in Appendix E.

GDOT requires the GDOT permit application to be submitted through the Georgia Utilities Permitting System (GUPS). The Developer or Owner is not to submit the GDOT permit directly through the GUPS. The Developer or Owner is to provide all necessary information, as stated in the previous paragraph, DCDWM shall review the information and provide comments (if necessary). Once the necessary information has been approved, DCDWM shall submit the GDOT permit application through the GUPS.

All work including furnishing materials for installing, relocating, and adjusting water distribution systems must be in accordance with the latest edition of Georgia Department of Transportation Standard Specifications Section 670 – Water Distribution System and Section 847 – Miscellaneous Pipe.

Traffic control shall be in accordance with the Manual on Uniform Traffic Control Devices (MUTCD), latest edition.

Trench restoration within GDOT right-of-way shall be in accordance with GDOT Standard Detail 1401 Pavement Patching Details.

All bore and jack pits must be a minimum of ten (10) feet from outside edge of pavement. Plans shall show casing size and carrier pipe size within the approach slab for bridge crossings.

All documents necessary for said application must be provided by the Developer's Engineer to DCDWM.

GDOT requires all fire hydrants to be relocated to within five (5) feet of the right-of-way.

A note shall be added to the plans stating that "Backflow prevention devices on private property will be relocated by GDOT's Contractor at no expense to DeKalb County."

D. Construction Materials and Installation

1. General

At no time will any water main construction commence prior to approval of all plans, receipt of any required agreement documents.

All materials used for water main construction shall meet AWWA Specifications.

Only DCDWM approved Contractors may install water mains.

All water mains, valves, fire hydrants, and other appurtenances to be dedicated to, or owned by DCDWM, shall be installed according to the "approved" design. All field changes must be pre-approved by DCDWM. Contractor must have a set of the "approved" design containing an original DCDWM stamp, and a copy of these Design Standards, most current edition, on site at all times.

Contractor shall adhere to all Federal, State, County, and local laws, ordinances, and regulations which in any manner affect the conduct of work, including, but not limited to, initiating, maintaining, and supervising all safety precautions and programs in connection with the Work.

Throughout the construction, the Contractor shall fully comply with the applicable requirements of local, State, and Federal agencies in the control and containment of soil erosion, including post-construction maintenance of erosion control devices.

2. Acceptable Materials

a) *Push-On Joint*

All push-on ductile iron pipe shall be manufactured in accordance with and meeting the latest requirements of AWWA C151/A21.51. All ductile iron fittings shall be manufactured in accordance with and meeting the latest requirements of AWWA C110/A21.10. All ductile iron joints shall be manufactured in accordance with and meeting the latest requirements of AWWA C111/A21.11. Pipe shall generally be designed for Type 1 laying conditions with four (4) feet of

cover, however, exceptional conditions may be indicated on the approved plans and specifications, and these shall take precedence.

Wall thickness of pipe shall be as specified under Section II.D.2.d.

b) *Mechanical Joint*

All mechanical joint ductile iron pipe shall be manufactured in accordance with and meeting the latest requirements of AWWA C151/A21.51.

Wall thickness of pipe shall be as specified under Section II.D.2.d.

The mechanical joint herein specified for mechanical joint ductile iron pipe and fittings shall meet the latest requirements of AWWA C110/A21.10 with joints meeting the latest requirements of AWWA C111/A21.11.

c) *Flanged Pipe (Non-buried Applications)*

All flanged ductile iron pipe shall be manufactured in accordance with and meeting the latest requirements of AWWA C151/A21.51 with joints meeting the latest requirements of AWWA C115/A21.15.

Wall thickness of pipe shall be as specified under Section II.D.2.d.

All flanged ductile iron fittings shall be manufactured in accordance with the latest requirements of AWWA C110, three hundred and fifty (350) PSI working pressure. Design of flanged ductile iron fittings shall be as directed, indicated, or noted on the approved drawings. In general, use flanged fittings with long radius elbows except where space limitations prohibit use of same. Design of special flanged fittings, including wall castings, shall conform to dimensions and details as directed, indicated, or noted on the approved drawings.

d) *Pipe Wall Thickness*

Ductile iron pipe with push-on or mechanical joints shall have the following minimum wall thickness:

PIPE DIAMETER (IN.)	PIPE CLASS	MINIMUM WALL THICKNESS (IN.)
4	51	0.26
6	51	0.28
8	51	0.30
10	51	0.32
12	51	0.34
14	51	0.36
16	51	0.37
18	51	0.38
20	51	0.39
24	51	0.41
30	51	0.43
36	51	0.48

42	51	0.53
48	51	0.58
54	51	0.65

(NOTE: Special Thickness Class fifty-one (51) has a working pressure of three hundred and fifty (350) PSI with a surge pressure allowance of one hundred and fifty (150) PSI. Where proposed pipe to be provided is "Pressure Class" rather than "Special Thickness Class", three hundred and fifty (350) PSI Class may be substituted for Special Thickness Class fifty-one (51) ductile iron pipe through pipe diameter twelve (12) inch, unless otherwise specified in the project design. "Pressure Class" pipe diameters greater than twelve (12) inch shall be provided with a wall thickness greater than or equal to the standard specified minimum wall thickness of Special Thickness Class fifty-one (51) ductile iron pipe unless otherwise specified in the project design.)

All ductile iron pipe with flanged joints shall be a minimum of Special Thickness Class fifty-three (53), minimum wall thickness:

PIPE DIAMETER (IN.)	PIPE CLASS	MINIMUM WALL THICKNESS (IN.)
4	53	0.32
6	53	0.34
8	53	0.36
10	53	0.38
12	53	0.40
14	53	0.42
16	53	0.43
18	53	0.44
20	53	0.45
24	53	0.47
30	53	0.51
36	53	0.58
42	53	0.65
48	53	0.72
54	53	0.81

(NOTE: Special Thickness Class fifty-three (53) has a working pressure of three hundred and fifty (350) PSI with a surge pressure allowance of one hundred and fifty (150) PSI.)

Pipe class and thickness of ductile iron pipe larger than fifty-four (54) inch in diameter shall be taken into special consideration and shall require approval by DCDWM.

e) *Service Materials*

Service materials shall be constructed of copper pipe with fittings and appurtenances in accordance with the following:

(1) Copper Tubing and Fittings

Copper pipe (or tubing) shall be minimum three-quarter (¾) inch and be manufactured and furnished in accordance with the latest requirements of ASTM B88, Type "K". Fittings shall be of the compression "pack-joint" coupling type.

(2) Appurtenances

Appurtenances such as corporation stops, curb stops, adaptors for copper service lines shall meet the latest requirements of ASTM B62 for bronze construction and AWWA C-800 for threads.

- Nut, Piggy-Back – ¾-inch Ford #C02-43 only; 1-inch Ford #C02-54 only.
- Union, 3-piece – ¾-inch Cop x Cop, Mueller #H-15400, Ford #C22-33, or James Jones J-1528 only. 1" Cop x Cop, Ford #C22-44, Mueller H-15400, Hays #5615, and James Jones J-1528 only.
- Adaptor, ¾-inch, M.I.P. x Cop, Mueller H-15425, Ford #C28-33, or James Jones J-1531 only.
- Adaptor, ¾-inch, F.I.P. x Cop, Mueller H-15450, Ford #C21-33, or James Jones J-1535 only.
- Copper Adaptor, 1-inch, M.I.P. x Cop, Ford #C28-44, Mueller H-15425, or James Jones J-1531 only.
- Copper Adaptor, 1-inch, F.I.P. x Cop, Ford #C21-44, Mueller H-15450, or James Jones J-1535 only.
- Flare, copper, quarter bend, ¾-inch Ford #L02-33, Mueller #H-15069 only.
- Flare, copper, quarter bend, 1-inch Ford #L02-44.
- Stop, ball valve curb, ¾-inch Flair Inlet, ¾-inch F.I.P. outlet, 5/9-inch reduced port and a lock wing, Ford #B21-233W, A.Y. McDonald 6102-W, or James Jones J-1901 only.
- Stop, ball valve curb, 1-inch Flair Inlet, 1-inch F.I.P. outlet, ¾-inch reduced port and a lock wing, Ford #B21-344W only.
- Stop, ¾-inch corporation, CC x Copper, Ford #F-600-3, Mueller #H-15000, or James Jones J-1500 only.
- Stop, 1-inch corporation, CC x Copper, Ford #F-600-4, Mueller #H-15000-1-inch, or James Jones J-1500 only.
- Stop, 1½-inch corporation, CC x MIP, Mueller #H-10003, McDonald 3121, or James Jones J-89.
- Copper, flare "Y" branch 1-inch x ¾-inch, Ford Y22-243 only.
- Couplings 1 ½-inch Ford C44-66, or James Jones J-2609 only.

(3) Small Rough Brass Fittings – Small rough brass fittings are to be in accordance with the latest edition of ANSI B16.15, and with Federal Specifications WW-P-460 and A-A-59617. Domestic only. This includes all

brass elbows, nipples, ells, tees, reducers, couplings, plugs, hex bushings for screwed fittings, and hex bushings.

(4) Bronze Fittings – Bronze fittings shall be in accordance with AWWA C800 latest edition and ASTM B62 latest edition specifications.

- Gate valve with non-rising stem, bronze, solid wedge disc and full flow FIP x FIP, one and one-half (1½) inch; heavy pattern solid bronze construction; with solid bronze hand wheel, oversize approximate 17/32-inch shaft (stem) diameter, packing providing field adjustment; double discs moveable in body allowing debris to slip under disc as closure occurs; to be American made with approximately 85-5-5-5 bronze, hydraulically tested individually in both open and closed positions, prior to shipment; equal to James Jones Company Model J-372, one and one-half (1½) inch.
- Gate valve with non-rising stem, bronze, solid wedge disc and full flow FIP x FIP, two (2) inch; heavy pattern solid bronze construction; with solid bronze hand wheel, oversize approximate five-eighths (5/8) inch shaft (stem) diameter, packing providing field adjustment; double discs moveable in body allowing debris to slip under disc as closure occurs; to be American made with approximately 85-5-5-5 bronze, hydraulically tested individually in both open and closed positions, prior to shipment; equal to James Jones Company Model J-372, two (2) inch.

For standard water service installation follow Standard Details W-008 and W-026, Appendix D. Follow Standard Details W-001, W-002 and W-003, Appendix D, for water service installation on cul-de-sacs.

f) *Valves*

(1) Valve Boxes

All valves which are to be buried in the ground shall be provided with a valve box and cover. Where the depth of cover is more than five (5) feet, the Contractor shall provide suitable, permanently installed valve stem extensions and guides which have been approved by DCDWM prior to fabrication and placement. Valve collar and disc marker are illustrated in Standard Detail W-029, Appendix D.

(2) Valve Concrete Markers

Valve markers shall be furnished and installed with each valve on the proposed project, with the exception of fire hydrant branch valves. The markers shall be Class A concrete of GDOT specifications, four (4) inches square by four (4) feet long, and shall be of the same construction as that of highway right-of-way markers. The top one (1) foot and six (6) inch portion of the valve marker is to be displayed above ground. The words "Water Valve" shall be cast vertically into the marker beginning two (2) inches from the top of the marker. There shall also be a one (1) inch brass plug cast into the marker one (1) inch below the letter "E" of the word "Valve", with the distance, in feet, from the valve marker to the valve box. Distance shall be stamped on the brass plug in the field by the Contractor, after installation. The markers shall be installed as close to the right-of-way line opposite the valve as is possible, with the brass plug facing the valve. The marker shall be located so as to avoid damage by traffic.

(3) Valve Cover with Marker Discs

Valve boxes installed in nonpaved areas shall be installed with a twenty four (24) inch by twenty four (24) inch concrete collar. For valves sixteen (16) inches and larger, a three (3) inch diameter brass identification marker shall be installed with the concrete collar. The brass identification marker shall be stamped with valve size, type of valve, type of service, direction of opening, and number of turns to open. An example of a valve concrete collar with brass identification marker is displayed in Standard Detail W-029 in Appendix D.

Valves sixteen (16) inches and larger installed in paved areas shall be installed with a three (3) inch diameter brass identification marker nine (9) inches (centerline to centerline) from the valve box. The brass identification marker shall be set with grout onto a four (4) inch by four (4) inch by eighteen (18) inch concrete column prior to installation next to the valve box. The brass identification marker shall not be cast or grouted directly onto the paved area. The brass identification marker shall be stamped with valve size, type of valve, type of service, direction of opening, and number of turns to open. An example of a brass identification marker installation in a paved area is provided in Standard Detail W-029 in Appendix D.

(4) Valves

Follow the general valve locations provided in Standard Detail W-018 in Appendix D.

- ***Gate Valves***

Gate valves shall conform to AWWA C500 (latest edition) for double-disc gate valves, or AWWA C509 (latest edition) for resilient-seated gate valves,

and shall be as manufactured by American Flow Control, U.S. Pipe, Mueller, Clow, or approved equal.

Gate valves shall be hand operated, non-rising stem, with cast or ductile iron bodies, and adapted for joints as indicated in the approved design drawings, or as directed.

All gate valves shall open by turning the operating nut to the left (counter clockwise).

Gate valves shall only be used in sizes two (2) inch through ten (10) inch, (twelve (12) inch permitted if using resilient seated gate valves).

For gate valve installation see Standard Detail W-007 in Appendix D.

- ***Butterfly Valves***

Butterfly valves shall conform to the requirements of AWWA C504 (latest edition), and shall be as manufactured by American Flow Control, Henry Pratt, Allis-Chalmers, or approved equal.

Butterfly valves shall be hand operated with cast or ductile iron bodies, and adapted for joints as indicated in the approved design drawings, or as directed.

All butterfly valves shall open by turning the operating nut to the left (counter clockwise).

Butterfly valves shall only be used in sizes twelve (12) inch and larger.

g) *Fittings and Appurtenances*

(1) Ductile Iron Fittings

Fittings shall be ductile iron and shall conform to the requirements of AWWA C110 or AWWA C153, latest editions, with a minimum rated working pressure of three-hundred and fifty (350) psi.

(2) Tapping Sleeves

All tapping sleeves must comply with the latest ANSI Standard, two hundred (200) PSI working pressure for water mains of twelve (12) inch diameter or less and one hundred and fifty (150) PSI working pressure for water mains with a diameter larger than twelve (12) inches. Tapping sleeves shall be cast iron or ductile iron with mechanical joint ends as manufactured by American Flow Control, Mueller, or approved equal. Fabricated split steel tapping sleeves of the full-circle variety, as manufactured by Rockwell, JCM, or equal, may be used with the approval of DCDWM. When tapping an existing asbestos-concrete pipe, a stainless steel tapping sleeve, as manufactured by Ford, or approved equal, which contains a full gasketed surface within the

sleeve body, is required due to variances in the manufactured O.D. of the asbestos-concrete pipe. Outlets shall be sized to permit a tap to be made using a full-size shell cutter.

(3) Tapping Saddles

All tapping saddles must be AWWA Standard approved with flanged connections. **NOTE: Tapping saddles will only be used on Ductile Iron Pipe twenty-four (24) inch or larger. The use of Service Saddles will not be allowed for tapping services or mains.**

h) *Fire Hydrants*

Fire hydrants shall be manufactured in full compliance with the AWWA Standard for Dry-Barrel Fire Hydrants, AWWA C502 (latest edition), and as herein amended. Only the following fire hydrants are approved for use by DeKalb County: American Darling B84B, MandH Style 129, Mueller A-423, Clow Medallion, US Pipe Metropolitan/M-94, or Waterous WB67-250. Follow fire hydrant installation Standard Detail W-004 in Appendix D.

Type – Three (3) way, post type, dry top traffic model with compression main valve opening against and closing in the direction of normal water flow.

Size - Internal main valve diameter shall be a minimum of five and one-quarter (5-¼) inches.

Identification - Each hydrant shall have the name of the manufacturer, the year when made, and the nominal valve size in legible, raised letters cast on the barrel or bonnet.

Dry Top Bonnet - Each hydrant shall be constructed with a moisture-proof lubricant chamber which encloses the operating threads and which provides automatic lubrication of the threads and bearing surfaces each time the hydrant is operated. This assembly shall be comprised of a top "O" ring serving as a dirt and moisture barrier and a lower "O" ring which will serve as a pressure seal.

Operating Nut - The operating nut shall be DCDWM Standard Four-Sided Nut and shall open by turning counter-clockwise (left). Nozzle caps shall come with heavy duty, non-kinking chains. Chains shall be securely affixed to the hydrant barrel and permit free turning of the nozzle caps and four-sided operating nut.

Traffic Design - The hydrant barrel sections shall be connected at the ground line in a manner that will prevent damage to the hydrant when struck by a vehicle. The main valve rod sections shall be connected at the ground line by a frangible coupling. The standpipe and ground line safety construction shall be such that the hydrant nozzles can be rotated to any desired position without disassembling or removing the top operating components and top section of the hydrant standpipe.

Main Valve - The main valve shall be made of synthetic rubber and formed to fit the valve seat accurately.

Main Valve Seat - The main valve seat shall be of bronze and its assembly into the hydrant shall involve bronze to bronze thread engagement. Two "C" ring seals shall be provided as a positive pressure seal between the bronze seat ring and the shoe. The valve assembly pressure seals shall be obtained without the employment of torque compressed gaskets. The hydrants shall be designed to allow the removal of all operating parts through the hydrant barrel by means of a single disassembly wrench without excavating.

Drain - The drain mechanism shall be designed to operate automatically with the operation of the main valve and shall allow momentary flushing of the drain ports. A minimum of two (2) internal and two (2) external bronze lined drain ports shall be required in the main valve assembly to drain the hydrant barrel.

Inlet Connection - The cast iron inlet elbow shall have a six (6) inch mechanical joint connection complete with accessories.

Extensions - Barrel extension sections shall be available in six (6) inch increments complete with rod, extension coupling, and the necessary flanges, gaskets, and bolts so that extending the hydrant can be accomplished without excavating.

Nozzles - No lead will be allowed in nozzle construction as a component of the metallic content.

Testing - All fire hydrants shall be tested in strict accordance with AWWA C502 (latest edition) at the point of manufacture. Certificates of Compliance shall be provided to DCDWM upon request.

Painting – All iron parts of the hydrant both inside and outside shall be painted in accordance with the latest requirements of AWWA C502. Final coat of all outside surfaces of the barrel above grade shall be comprised of two field coats of Tnemec Series 2H, Hi-Build Tnemec-Glass or County Engineer approved equal. The top bonnet, including the lip and all nozzle caps shall be painted the appropriate color as depicted in Standard Detail W-030, Appendix D. Caps and weather covers shall have reflecting properties.

3. Trench Excavation

Excavation Methods

All excavation shall be open cut unless otherwise indicated on the "approved" design or directed by DCDWM. In general, topsoil may be removed by machine method. Excavation below topsoil may also be performed by machine, but shall be supplemented by such hand dressing or leveling as may be required to conform to

lines and grades as given by DCDWM. Material so removed shall be used in backfill, making embankments, filling low areas, or as otherwise directed.

Hand tool excavation shall be used where necessary to protect existing utilities and structures.

All slopes shall be carefully cut or graded by hand to grades required by DCDWM and shall be tamped or otherwise compacted to maintain the material in position.

The final trimming of the bottoms and sides of excavations which is to be adjacent to masonry shall be done just before the concrete is placed, or poured.

In open or improved lawn areas, excavation should be done, if possible, utilizing a tractor-mounted backhoe and extreme care should be taken to avoid damage to adjoining lawn areas. In areas not readily accessible by machinery and where excavation is required near existing trees and shrubberies which may be damaged by excavation equipment, the trench shall be excavated using hand tools.

The minimum width of trench from an elevation of twelve (12) inches above the top of the pipe to the bottom of the trench shall be as indicated on Standard Detail W-019, Appendix D.

In order to limit loads on the pipe, the maximum width of the trench shall not be more than twenty-four (24) inches wider than the outside diameter of the pipe. This trench width restriction applies from the bottom of the bedding to twelve (12) inches above the top of the pipe. Trenches greater than six (6) feet deep shall be sloped from a point twelve (12) inches above the pipe to ground surface elevation, refer to Standard Detail W-019, Appendix D.

Excavation of pipe trenches with sides sloping to the trench bottom will not be permitted.

Should trenches be excavated with more than the specified maximum widths, DCDWM may require the Contractor to furnish concrete cradles or concrete encasement for the pipe.

4. Removal of Water

The Contractor shall pump out, or otherwise remove and properly dispose of, any water (e.g. storm water and/or ground water) as fast as it collects in the excavation. Water shall not accumulate or be present in the excavated trench at any time. This removal is required regardless of the source.

All necessary precautions shall be taken to prevent disturbance at, and to properly drain, any areas upon which concrete is to be poured, or upon which pipe is to be laid.

Approved, and appropriate, equipment with sufficient capacity to remove water from the work shall be kept on site at all times. Equipment shall be used in such a manner as to not withdraw sand or cement from concrete. Contractor is also to ensure that removal of any liquids will not interfere with the proper laying of pipe, or prosecution of any of the required work for the complete construction of the project.

The flow in sewers, drains, gutters, or water courses encountered during the construction shall be adequately provided for by the Contractor to ensure these flows do not interfere with the prosecution of the Work, and are maintained in such a manner as to ensure continuity of flow at all times.

Unless otherwise permitted, ground water encountered within the limits of excavation shall be depressed to an elevation not less than twelve (12) inches below the bottom of such excavation. This depression is to be done before pipe laying or concrete work is started and shall be so maintained until concrete and joint materials have attained initial set.

If raw sewage is encountered during performance of the work, the Contractor will immediately stop work and shall notify DCDWM. DCDWM will then determine if actions by the Contractor caused the leak. Any raw sewage encountered shall immediately be pumped and hauled to a manhole, pump station, or advanced wastewater facility, as directed by DCDWM.

If other hazardous liquids or materials (as defined by the State of Georgia in conjunction with CERCLA and SARA, Title III) are encountered during performance of the work, the Contractor will immediately stop work and shall notify the appropriate State Agency and DCDWM. Hazardous liquids include, but are not limited to gasoline, diesel fuel, and industrial solvents or cleaners. The State, in conjunction with DCDWM, will then determine if actions by the Contractor caused the liquids or materials to leak or be further dispersed. Any hazardous liquids or materials shall be properly disposed of as directed by the State, in conjunction with DCDWM.

5. Sheeting and Shoring

The Contractor shall be responsible for supporting and maintaining required excavations even to the extent of sheeting and shoring the sides and ends of excavations with timber or other supports. If the sheeting, braces, shores, stringers, wailing timbers, or other supports are not properly placed, or are insufficient, the Contractor shall provide additional or stronger supports as may be required. The requirement of sheeting or shoring, or of the addition of supports, shall not relieve the Contractor of his responsibility of their sufficiency.

Trench sheeting shall be left in place until the backfilling has been completed to an elevation not less than twelve (12) inches above the top of the pipe. Unless otherwise

ordered by DCDWM, sheeting shall be cut off at the top of the lowest set of bracing and the upper section shall be removed.

Where in the opinion of DCDWM the removal of sheeting may endanger the work, such sheeting will be ordered to be left in place and the tops cut off as directed or as specified above. Removal of the sheeting shall be done in such a manner as to prevent injurious caving of the sides. All voids left by the sheeting along trenches shall be carefully filled and rammed with suitable tools.

In quicksand or soft ground, sheeting shall be driven to such depth below the bottom of the trench as directed.

6. Bedding

Bedding materials shall be in accordance with GDOT Standard Specification Section 812, Type II Foundation Backfill.

Bedding requirements specified herein shall apply to potable water mains only. They are to be considered minimum bedding requirements and as such, do not relieve the Engineer/Contractor of the responsibility to provide any additional bedding necessary for proper construction.

The bedding material shall be placed in the bottom of the trench after it has been excavated to an elevation sufficient to permit the placing of not less than six (6) inches, or as directed. The surface of the bedding material shall be spread to form a uniform support for the pipe and appurtenances. After installing each section of the pipe, additional bedding material shall be placed on either side of the pipe to an elevation consistent with the bedding type specified herein, as indicated on the plans or specifications, or as directed by DCDWM. This material is to be well tamped and compacted into place so as to secure a firm, even bearing.

Bedding material shall be placed for the full width of the trench bottom.

7. Pipe Handling

Unload ductile iron pipe, fittings, and accessories from trucks with hoists or by skidding. Do not skid or roll pipe handled on skidways against pipe already on the ground. Under no circumstances are said materials to be dropped off any delivery vehicle. Should any material be accidentally dropped, it shall be immediately set aside, and thoroughly inspected by DCDWM before any decision is made regarding its acceptability. If damage occurs to the lining, make repairs or replacement as directed by DCDWM. If there is any question regarding acceptability of said suspect materials by DCDWM, the Contractor shall either remove and replace the questionable materials, or obtain a sworn statement from the manufacturer certifying the materials as "undamaged".

Use proper, suitable tools and appliances for the safe and convenient handling and laying of pipe and fittings. Take great care to prevent the coating and lining from being damaged.

Pipe may not be "strung", or laid out, along the project within existing highway rights-of-way, unless specifically directed to do so by DCDWM, and only then after receiving permission from the road authority which has jurisdiction. Pipe shall be stored in such a manner as to keep the interior free of dirt and other foreign matter.

The Contractor shall carefully examine all pipe and fittings for defects just before laying. No pipe or fitting which is known to be defective shall be laid. In the event that defective pipe or fittings are discovered after having been laid, the Contractor shall remove and replace with sound pipe or fittings in a manner satisfactory to and at no addition cost to DCDWM.

It is the Contractor's responsibility to maintain a clean work site and clean materials throughout the project. All pipe and fittings shall be kept free from mud, dirt, and debris while stored on site, and shall be thoroughly cleaned before being laid. During any stoppage in the laying of pipe, and when ending construction for the day, the Contractor shall install a mechanical or fitted plug in the open end of the pipe to prevent contamination of the pipeline. Should any accidental contamination occur, the pipe shall be thoroughly cleaned and swabbed out, and inspected by DCDWM, before new or further pipe installation may commence.

8. Pipe Laying

All pipe shall be thoroughly cleaned before being laid and shall be kept clean until final acceptance of the work.

The pipe shall be laid and jointed in the following manner:

Clean Ring and Spigot – The gasket, groove, and pipe spigot shall be wiped clean of all foreign material.

Install Gasket – Insert the ring in the groove taking care to see that the gasket is evenly seated and free from twists.

Apply Lubricant – Lubricate the spigot end of the pipe from the pipe end to the full insertion mark. Use only the lubricant approved by the manufacturer. After the spigot end has been lubricated it must be kept clean and free of dirt, sand or embedment material. If foreign matter adheres to the lubricated end, the spigot must be wiped clean and re-lubricated.

Assembly – After the pipe sections are aligned, the spigot end should be pushed into the bell or coupling until it hits the stop and/or the reference insertion mark is in the proper location. The recommended assembly method is the use of a bar and a block.

Pullers such as a “come along” may also be used if the pipe is protected from the chain or cable. Pipe deflection/offset shall not exceed the values listed in Standard Detail W-005, Appendix D.

For installation of water mains in cul-de sacs follow Standard Details W-001, W-002, and W-003 in Appendix D. Typical water main stub-out installation is provided in Standard Detail W-006, Appendix D. If repair of a water main is necessary, follow Standard Detail W-021, Appendix D, for approved repair sleeve installation.

9. Tapping of Existing Mains

Connections to existing pipe lines shall generally be made by the use of tapping sleeves and valves, except as specifically indicated on the approved drawings to be otherwise, or as may be directed by DCDWM. In certain instances it may be specified or desirable to tap a "dry" line. In this circumstance a tapping sleeve and valve is required and the tap accomplished utilizing a standard "tapping machine". Under no circumstances will the Contractor be permitted to "burn" a hole in the main using oxyacetylene tools.

The Contractor shall furnish and install tapping sleeves and valves suitable for connection to the existing water mains at locations indicated on the approved plans, or as directed. It is the Contractor's responsibility to verify the type, size, O.D., and class of the existing pipe before ordering the tapping sleeve and valve.

Prior to making the tap, the Contractor, in the presence of the Project Inspector, shall hydrostatically pressure test the complete tapping sleeve and valve installation at a test pressure of two hundred (200) PSI, or fifty (50) PSI over the existing system static pressure, whichever is greater (pneumatic or air-pressure testing is prohibited).

The Contractor shall properly support the tapping sleeve and valve using bricks, blocks, wedges, or other substantial supporting materials, which will not permit the tapping valve or tapping machine to transfer any downward rotational force to the tapping sleeve. This support shall be provided before mounting the tapping machine.

The closing of any existing mainline valves to isolate a particular pipe for a "wet cut-in" will be accomplished by the Contractor under the specific direction and presence of the DCDWM Project Inspector, and at such time as may be directed by DCDWM. All such shut downs must be approved in advance by DCDWM. The Contractor shall provide all labor and equipment sufficient to uncover valves and clean out valve boxes for access to any existing valves necessary to complete or repair work as part of the Project. DCDWM will provide all records and information available to assist in the locating of covered valves, and will also provide assistance in the form of electronic locating equipment. This assistance shall not relieve the Contractor of his responsibility to locate any necessary valves to accomplish the Work.

The Contractor shall be responsible for notifying all customers who will be affected by the interruption of water service. Such notification must be made at least twenty-four (24) hours in advance of the planned shut-down. No service may be interrupted without DCDWM Inspector's prior approval.

a) *Six (6) inch thru Sixteen (16) inch Taps*

When six (6) inch through sixteen (16) inch taps are to be made, DCDWM will furnish the tapping machine, provide for welding, if required, and do the actual tapping of the main. The Contractor is responsible for all excavation, furnishing and installation of the tapping sleeve and valve, testing, backfilling, hauling, and anything else to provide a complete connection to the existing main. Upon successful pressure test of the assembly, DCDWM shall install and operate the tapping machine.

b) *Twenty (20) inch Taps and Larger*

Where twenty (20) inch and larger taps are to be made, the Contractor shall be responsible for furnishing and operating the tapping machine and do all work to make the installation complete. Tapping machine, sleeves and valve shall be operated and installed under the supervision of skilled mechanics that have a minimum of six (6) years in tapping connection experience. For all sizes of existing steel pipe water main, DCDWM will furnish and install the tapping spigot by welding and operate the Contractor furnished tapping machine. The Contractor shall do all other work required to complete the connection, including excavation as mentioned herein.

10. Backfilling Trenches

Backfill in trenches where pipe has been laid shall be placed continuously by hand in layers not exceeding six (6) inches in thickness and carefully and thoroughly consolidated by tamping simultaneously on both sides of the pipe to a height of twelve (12) inches above the top of the pipe. This backfilling and compacting must be done promptly and before any backfill material is deposited directly from a machine bucket, loaders, trucks, or other mechanical equipment. Once utilizing a machine bucket for backfilling, the bucket must be lowered into the trench to deposit the material in such a manner as to avoid the shock of falling earth which could injure or damage the pipe or structure. Under no circumstances should the material be allowed to fall from the machine or loader bucket directly onto the pipe or conduit in the trench. Follow Standard Detail W-019, Appendix D, for trench backfill procedure.

Except as otherwise ordered by DCDWM, all forms, bracing, and lumber shall be removed from the trench before backfilling.

Bottoms of trenches in earth must be shaped or molded and compacted to the contour of the outside of the pipe, using bedding materials, as directed, or where indicated on the approved design, to give full support to the lower segment of the pipe. This shall be done in such a manner as to prevent any subsequent settlement of the pipe.

Boulders or loose rock which might bear against the pipe will not be permitted in the trench bottom, or in the backfill within two (2) feet above the top of the pipe. Bottoms of excavations which are of loose granular soils shall be compacted by vibratory compactor prior to laying of pipe to a minimum density of ninety-five percent (95%) of the maximum dry density as determined by the standard proctor test ASTM D698 (latest version).

Where foundation conditions are such that proper bedding cannot be provided, such as in quicksand, the Contractor may be directed by DCDWM to provide foundation cushion, concrete cradles, or other special provisions to provide support for the pipe.

Only after the backfill has been placed and hand-compacted to at least six (6) inches above the top of the pipe may the work proceed in the placement of the remaining backfill material, which must be carefully placed and compacted. In streets, other surfaced areas, or where directed, the backfill shall be placed and compacted in lifts not to exceed twelve (12) inches in thickness. All precautions must be taken to avoid having any unincorporated material which may result in future settlement in these areas. Compaction shall be accomplished by approved mechanical tampers. The number of employees tamping shall at no time be less than the number of employees backfilling, and if necessary, additional employees shall be kept in the trench to spread the material.

Backfill material shall be compacted to a density of not less than ninety-five pecent (95%) of the maximum dry density as determined by the standard proctor test ASTM D698 (latest version). When directed, the Contractor shall arrange to have such compaction tests conducted by an independent testing firm; the number and locations to be determined by DCDWM.

Materials used for backfilling shall be free from all perishable organics or other objectionable materials, and shall contain no stones larger than six (6) inches in its longest dimension.

No clay backfill shall be used in pipe trenches under roadways or other paved areas. In such paved areas where clay is encountered, trenches shall be backfilled with No. 57 stone or crushed rock.

If, in the opinion of DCDWM, the original excavated material is unsuitable for use as backfill, such as perishable matter, refuse, building materials, wire, brush, stumps, ashes, large stones, muck, or other soft materials, the Contractor shall properly dispose of the objectionable materials, and shall furnish, haul, and place borrow material suitable for proper backfill.

Backfilling shall not be done in freezing weather, except by permission of DCDWM, and shall not be done using frozen materials or upon frozen materials.

All backfilling shall be left with smooth, even surfaces, properly graded, and shall be maintained in such condition until final completion and acceptance of the work, not withstanding applicable warranty periods. Where directed by DCDWM, the Contractor shall mound the backfill slightly above the adjacent ground to allow for settlement.

11. Restoration of Pavements, Sidewalks, and Curbs

Follow Standard Detail W-027, in Appendix D, for the repair of concrete and asphaltic concrete surfaces.

a) *Work Included*

The Contractor shall furnish all materials for, and properly restore all pavements, drives, sidewalks, and curbs, which may have been damaged, removed, or disturbed as a result of accomplishing the Work. Restoration and replacement shall be made to the satisfaction of DCDWM. This shall include in general, but without limitation, all necessary concrete, reinforcing steel, stone, cinders, gravel, slag, asphalt, or other bituminous material necessary for the proper completion and restoration of the Work as may be required, directed, or specified.

b) *Materials and Workmanship*

Materials to be used in the repair and restoration of pavements, drives, sidewalks, and curbs, shall be first quality. All materials removed while accomplishing the work shall be disposed by the Contractor on sites approved by DCDWM. No existing material may be reused in the Work unless pre-approved by DCDWM. All workmanship shall be first class. Concrete shall be Class B plain concrete with a 28-day compressive strength of 3,000 psi, unless otherwise specified in the drawings or specifications.

c) *Restoring Pavements*

After the pipe has been laid, appurtenant work constructed, and backfill completed, the Contractor shall furnish, place, restore, and maintain all pavements or roadway surfaces which have been removed or damaged by or in pursuit of the Work. The form and degree of restoration shall be as specified on the approved design, as specified herein, and/or as directed by DCDWM.

For backfilling roadway cuts, only No. 57 stone backfill shall be used. See Section II.D.6 for trench bedding requirements and Section II.D.10 for trench backfill requirements.

All roadway restoration shall be done in accordance with the lawful requirements of the authorities within whose jurisdiction such pavement is located. All highway utilities and traffic controls are to be maintained and work shall conform to the rules and regulations of the authorities, including the use of standard signs. The Contractor shall furnish all such bonds or checks which may be required by the highway authorities to ensure proper restoration of paved areas.

When removal of pavement is required (other than gravel types) the Contractor shall outline the area to be removed by making saw-cuts. Saw-cuts shall be vertical to allow the removal of the paving material in straight lines. If pavement breakage occurs beyond the saw-cut, the Contractor shall make a new straight saw-cut beyond the furthest point of breakage.

The concrete base course shall extend the full width of the trench cut plus a minimum of twelve (12) inches on either side of the trench. The existing pavement shall be neatly sawed along both sides of the ditch. The concrete used shall be Class A or B Concrete. Once the concrete base course has properly set, the concrete surface shall be cleaned and a minimum of one (1) inch thick asphaltic concrete pavement shall be laid to match the level of the adjacent pavement, see Standard Detail W-027 in Appendix D for patch and resurfacing requirements.

At any time that an existing road is cut longitudinally for a distance greater than one hundred (100) feet, the concrete shall be poured flush with existing and the street shall be resurfaced curb to curb with one (1) inch minimum of asphaltic concrete. Existing road shall be restored to preconstruction condition.

The Contractor shall be responsible for maintaining all pavement cuts prior to project acceptance and during the one (1) year maintenance period. Should any failures be noted associated with any portion of the work, the Contractor shall remove all such damaged surfaces and make full repairs; this includes adding and re-compacting approved backfill materials, placing and maintaining bituminous concrete pavement or stone road surfaces. All required pavement repairs necessitated due to pavement failure, either prior to final project acceptance or during the one (1) year maintenance period, shall be completed by the Contractor within five (5) working days of notification by DCDWM. Bituminous concrete pavements or stone road surfaces, which the Contractor is required to replace, shall be in at least as good condition at the end of the one (1) year maintenance period as it was before construction.

d) *Roadway Permits*

The Contractor is responsible for obtaining all road opening permits from the DeKalb County Department of Public Works Transportation Division at (770)492-5222, including providing any required restoration bonds.

DCDWM shall obtain all road opening permits required by the GDOT. The Contractor is not permitted to make any type of cuts on roadways requiring a permit from the GDOT until such time as the permit is provided and prominently displayed on-site.

e) *Restoring Driveway Pavements*

The Contractor shall repair or replace all driveway sections disturbed by the process of the Work. Driveways shall be constructed of the same materials and to

the same thickness of the adjoining wearing surface or to the minimums indicated on GDOT Standard Detail A1 in Appendix E, whichever is greater. In restoring driveways, the subsoil and foundation material shall be well-compacted so as to prevent any future settlement or cracking of the driveway pavement. In restoring concrete driveways, the base course shall be wetted prior to pouring new concrete. Where necessary to cut a concrete driveway, the cuts shall be made with a masonry saw, providing a smooth, straight line completely across the driveway. Partial cut-outs, crooked cuts, or cuts made by any other method other than masonry saw are not permitted. In general, or where directed, concrete slab removal shall be made in entire pavement sections to the nearest existing expansion-joint.

f) *Restoring Curbs*

The Contractor shall restore all curbs and combination curbs and gutters which have been removed or disturbed in the progress of the work. Curbing shall be made to conform accurately in size, line, grade, and materials as the adjoining section. In restoring curbs, the subsoil and foundation material shall be well compacted so as to prevent any future settlement of the concrete curbing. The sub-base shall be thoroughly rolled or tamped and shall be wet just before the concrete is placed, but shall show no pools of water.

g) *Restoring Sidewalks*

The Contractor shall restore all sidewalks which have been removed or disturbed in the progress of the work. Sidewalks shall be constructed to the same dimensions and materials as the adjoining sections.

Where necessary to cut a sidewalk, entire sections shall be removed and replaced unless otherwise directed by DCDWM.

The sub-base shall be thoroughly rolled or tamped and shall be wetted just before the concrete is placed, but shall show no pools of water.

h) *Contractor's Warranty of Restored Paved Surfaces*

The Contractor shall make every provision to ensure compaction by properly tamping any backfill under areas to be paved. Any settlement which may occur during the one (1) year warranty period shall be corrected by the Contractor at his expense, including removing, re-compacting, and replacing any paved surfaces which show signs of settlement, whether or not actual damage to the paved surface has occurred. This shall apply to all paved surfaces including streets, drives, sidewalks, and curbs and gutters.

Should settlement, cracks, or other indications of failure, or impending failure, appear in the paved surface, the adjoining paving shall be removed to the extent necessary to secure a firm, undisturbed bearing. All removal, re-compaction, and replacement shall be in accordance with the specifications concerning these operations as stated elsewhere.

i) *Work Included*

The Contractor shall furnish all materials for, and properly restore all pavements, drives, sidewalks, and curbs, which may have been damaged, removed, or disturbed as a result of accomplishing the Work. Restoration and replacement shall be made to the satisfaction of DCDWM. This shall include in general, but without limitation, all necessary concrete, reinforcing steel, stone, cinders, gravel, slag, asphalt, or other bituminous material necessary for the proper completion and restoration of the Work as may be required, directed, or specified.

j) *Materials and Workmanship*

Materials to be used in the repair and restoration of pavements, drives, sidewalks, and curbs, shall be first quality. All materials removed while accomplishing the work shall be disposed by the Contractor on sites approved by DCDWM. No existing material may be reused in the Work unless pre-approved by DCDWM. All workmanship shall be first class. Concrete shall be Class B plain concrete with a twenty-eight (28) day compressive strength of three thousand (3,000) PSI, unless otherwise specified in the drawings or specifications.

k) *Restoring Pavements*

After the pipe has been laid, appurtenant work constructed, and backfill completed, the Contractor shall furnish, place, restore, and maintain all pavements or roadway surfaces which have been removed or damaged by or in pursuit of the Work. The form and degree of restoration shall be as specified on the approved design, as specified herein, and/or as directed by DCDWM.

For backfilling roadway cuts, only No. 57 stone backfill shall be used. Backfill material shall be placed and compacted to a density of not less than ninety-five percent (95%) as determined by a standard proctor test ASTM D698 (latest version). DCDWM may require that tests, conducted by an independent laboratory, be made at various locations to confirm the density of the compacted material. The location and number of tests shall be designated by DCDWM as the work progresses. All costs associated with such testing shall be borne by the Contractor.

All roadway restoration shall be done in accordance with the lawful requirements of the authorities within whose jurisdiction such pavement is located. All highway utilities and traffic controls are to be maintained and work shall conform to the rules and regulations of the authorities, including the use of standard signs. The Contractor shall furnish all such bonds or checks which may be required by the highway authorities to ensure proper restoration of paved areas.

When removal of pavement is required (other than gravel types) the Contractor shall outline the area to be removed by making saw-cuts. Saw-cuts shall be vertical to allow the removal of the paving material in straight lines. If pavement

breakage occurs beyond the saw-cut, the Contractor shall make a new straight saw-cut beyond the furthest point of breakage.

The Contractor shall be responsible for maintaining all pavement cuts prior to project acceptance and during the one-year maintenance period. Should any failures be noted associated with any portion of the work, the Contractor shall remove all such damaged surfaces and make full repairs; this includes adding and re-compacting approved backfill materials, placing and maintaining bituminous concrete pavement or stone road surfaces. All required pavement repairs necessitated due to pavement failure, either prior to final project acceptance or during the one-year maintenance period, shall be completed by the Contractor within five (5) working days of notification by DCDWM. Bituminous concrete pavements or stone road surfaces, which the Contractor is required to replace, shall be in at least as good condition at the end of the one (1) year maintenance period as it was before construction.

l) *Roadway Permits*

The Contractor is responsible for obtaining all road opening permits from the DeKalb County Department of Public Works Transportation Division at (770)492-5222, including providing any required restoration bonds.

DCDWM shall obtain all road opening permits required by the GDOT. The Contractor is not permitted to make any type of cuts on roadways requiring a permit from the GDOT until such time as the permit is provided and prominently displayed on-site.

m) *Restoring Driveway Pavements*

The Contractor shall repair or replace all driveway sections disturbed by the process of the work. Driveways shall be constructed of the same materials and to the same thickness of the adjoining wearing surface or to the minimums indicated on GDOT Standard Detail A1 in Appendix E, whichever is greater. In restoring driveways, the subsoil and foundation material shall be well-compacted so as to prevent any future settlement or cracking of the driveway pavement. Where necessary to cut a concrete driveway, the cuts shall be made with a masonry saw, providing a smooth, straight line completely across the driveway. Partial cut-outs, crooked cuts, or cuts made by any other method other than masonry saw are not permitted. In general, or where directed, concrete slab removal shall be made in entire pavement sections to the nearest existing expansion-joint.

n) *Restoring Curbs*

The Contractor shall restore all curbs and combination curbs and gutters which have been removed or disturbed in the progress of the work. Curbing shall be made to conform accurately in size, line, grade, and materials as the adjoining section. In restoring curbs, the subsoil and foundation material shall be well compacted so as to prevent any future settlement of the concrete curbing.

o) *Restoring Sidewalks*

The Contractor shall restore all sidewalks which have been removed or disturbed in the progress of the work. Sidewalks shall be constructed to the same dimensions and materials as the adjoining sections.

Where necessary to cut a sidewalk, entire sections shall be removed and replaced unless otherwise directed by DCDWM.

The sub-base shall be thoroughly rolled or tamped and shall be wetted just before the concrete is placed, but shall show no pools of water.

p) *Contractor's Warranty of Restored Paved Surfaces*

The Contractor shall make every provision to ensure compaction by properly tamping any backfill under areas to be paved. Any settlement which may occur during the one (1) year warranty period shall be corrected by the Contractor at his expense, including removing, re-compacting, and replacing any paved surfaces which show signs of settlement, whether or not actual damage to the paved surface has occurred. This shall apply to all paved surfaces including streets, drives, sidewalks, and curbs and gutters.

Should settlement, cracks, or other indications of failure, or impending failure, appear in the paved surface, the adjoining paving shall be removed to the extent necessary to secure a firm, undisturbed bearing. All removal, re-compaction, and replacement shall be in accordance with the specifications concerning these operations as stated elsewhere.

12. Seeding / Sod Replacement, add temporary

a) *Work Included*

The Developer/Contractor shall furnish all materials for, and properly restore to the satisfaction of DCDWM, all ground surfaces irrespective of type, which may be disturbed in the progress of the work. The Developer/Contractor shall refer to the AASHTO “Green Book” for erosion and sedimentation control for additional standards and requirements not listed in these Standards.

This shall include in general but without limitation, the spreading of topsoil, seeding, sod replacement, fertilizing, and mulching required to restore disturbed areas as may be necessary, directed, or specified herein. On all "sod" type lawns and other improved, well established grass areas, the sod/grass shall be carefully removed, kept alive, and replaced after the backfilling and grading is finished. The Contractor shall also remove all spoil from such areas as quickly as possible after the excavation is backfilled, and he shall leave the premises in as good condition as before undertaking the work. It is the intent of these Design Standards to restore all disturbed areas, to place seed and mulch in areas not specifically identified as improved lawns, to place topsoil and seed where

improved lawns existed prior to construction, and to provide for "sod" removal and replacement in areas identified as such prior to construction.

b) *Temporary Sedimentation and Erosion Control*

Limitation of Exposure of Erodible Earth: Contractor is to provide erosion and/or pollution control measures to prevent contamination of any river, stream, lake, tidal waters, reservoir, canal, or other water impoundments or to prevent detrimental effects on property outside the project right-of-way or damage to the project.

Use temporary erosion control features to:

1. Correct conditions that develop during construction which were not foreseen at the time of design,
2. Control erosion prior to the time it is practical to construct permanent control features,
3. Provide immediate temporary control of erosion that develops during normal construction operation.

Schedule operations such that the area of unprotected erodible earth exposed at any one time is not larger than the minimum area necessary for efficient construction operations, and the duration of exposure of uncompleted construction to the elements is as short as practicable.

(a) Acceptable Erosion Control Measures:

1. Temporary Mulching:

   Furnish and apply a two (2) to four (4) inch thick blanket of straw or hay mulch to areas, as needed, then mix or force the mulch into the top two (2) inches of the soil in order to temporarily control erosion. When beginning permanent grassing operations, plow under temporary mulch materials in conjunction with preparation of the ground.

2. Artificial Coverings:

   a. Use artificial coverings composed of natural or synthetic fiber mats, plastic sheeting, or netting as protection against erosion during temporary pauses in construction caused by inclement weather or other circumstances. Remove the material when construction resumes.

   b. Use artificial coverings as erosion control blankets to facilitate plant growth while permanent grassing is being established. For the purpose described, use non-toxic, biodegradable, natural or synthetic woven fiber mats.

Install erosion control blankets capable of sustaining a maximum design velocity of six and one-half (6.5) fps as determined from tests performed by Utah State University, Texas Transportation Institute or an independent testing laboratory.

Install all sediment control devices in a timely manner to ensure the control of sediment and the protection of lakes, streams, gulf or ocean waters, or any wetlands associated therewith and to any adjacent property outside the right-of-way as required.

At sites where exposure to such sensitive areas is prevalent, complete the installation of any sediment control device prior to the commencement of any earthwork.

(b) Acceptable Sedimentation Control Measures:

1. Sandbags: Furnish and place sandbags in configurations to control erosion and siltation.
2. Berms: Construct temporary earth berms to divert the flow of water from an erodible surface.
3. Baled Hay or Straw: Provide bales having minimum dimensions of fourteen (14) by eighteen (18) by thirty-six (36) inches at the time of placement. Construct Baled Hay or Straw dams as needed to protect against downstream accumulations of sediment.
4. Temporary Silt Fences: Furnish, install, maintain, and remove temporary silt fences, in accordance with the manufacturer's directions.
5. Rock Bags: Furnish and place rock bags to control erosion and siltation.

c) *Standard Specification for Seeding / Sod Replacement*

The requirements of the GDOT "Standard Specifications - Construction of Roads and Bridges", Current Edition, and as revised to date, shall apply insofar as they are applicable for all seeding/sod replacement.

d) *Topsoil*

Where directed by DCDWM, area to be seeded shall be covered with a layer of topsoil. The topsoil shall be of sufficient thickness that when spread and compacted, a minimum of four (4) inches will be available. The Contractor shall furnish natural topsoil of a good condition and tillable structure. Obtain topsoil as borrow from an outside source of uniform texture, drainage, and other characteristics so as to constitute a homogeneous soil meeting the requirements of

GDOT, and as approved by DCDWM. The Contractor shall furnish topsoil that is free from objectionable materials such as hard clods, stiff clay, sods, hardpan, partially disintegrated rock, large roots, or other materials that are not integrally a natural component of good agricultural soils, and which are harmful or not beneficial for successful plant growth. Do not use topsoil containing frost or in an excessively wet (muddy) condition. If utilizing existing material obtained from the initial excavation of the work site for re-use as topsoil, the Contractor must first obtain approval from DCDWM as to suitability of its content, including approval of location and method of storage of topsoil for re-use.

e) *Seeding*

Seeding shall be accomplished by the Contractor using a properly proportioned mixture of inoculated seed approved for use in "Zone One" as detailed in the GDOT's Standard Specifications. Seeding shall only be permitted in the specified planting season for "Zone One" for the specified mixture. All seeded areas shall be uniformly mulched immediately after seeding.

The Contractor shall maintain all seeded areas to include mowing, watering, and re-seeding any bare areas until a satisfactory stand of grass has been obtained and final acceptance of the work has been received from DCDWM. Areas showing evidence of settlement or loss of topsoil shall be rebuilt and re-seeded as required.

In general, the Contractor shall replace existing maintained lawn areas with the same type of grass as was established prior to construction. Any deviations or alternatives proposed due to unavailability of seasonal grasses, or inappropriateness of seeding due to time of year must be presented to the DCDWM Inspector in writing with signed authorization of homeowner.

f) *Preparation of Seeded/Sod Areas*

The subgrade for any areas to be seeded shall be brought to a uniform grade by the Contractor and shall be free of stones larger than one (1) inch, roots, gravel, or other debris. Where topsoil is required by DCDWM, the topsoil shall be uniformly graded, trimmed, and raked free of unsuitable materials, ridges, bumps, or depressions. Over this area, the Contractor shall spread agricultural lime at the rate of one hundred (100) pounds per one thousand (1,000) square feet and shall spread a general fertilizer uniformly on the surface of the ground at a rate of thirty-five (35) pounds per one thousand (1,000) square feet. The lime and fertilizer shall be mixed uniformly into the top four (4) inches of the soil using suitable harrows, tillers, or other mechanical equipment.

g) *Sod Removal/Replacement*

On all well established and "sod" type lawns, the Contractor may at his discretion, utilizing suitable sod cutting equipment, cut the sod into rolls, carefully remove and store the sod , and water and maintain in a viable condition for replacement after backfill. Any such sod removed and replaced in this manner must be

demonstrated to be living to the DCDWM Inspector prior to final acceptance of project.

If sod is to be replaced with "new" sod, the Contractor shall only replace using sod of the same type as that removed. Any deviations or alternatives proposed due to unavailability of seasonal grasses must be presented to DCDWM Inspector in writing with signed authorization of homeowner.

13. Maintenance of Traffic

The Contractor is responsible for obtaining all road opening permits from the DeKalb County Department of Public Works Transportation Division at (770) 492-5222, including providing any required restoration bonds.

When a water main is to be installed within the travelway of a DeKalb County or GDOT controlled road, a traffic control plan (TCP) may be required. The TCP, with the construction plans, shall be submitted to the reviewing agency for review and approval. The following roadway features shall be shown on the TCP:

- Pavement Width
- Pavement Type
- Speed Limit
- Traffic Lane Designation
- Pavement Markings
- Traffic Signs/Signals
- Sidestreets/Intersection Location

A TCP shall include the following:

- Legend
- Work Hour Restrictions
- Construction Sequence/Phasing
- Work Zone Designation
- Sign Placement
- Taper Length
- Traffic Movement Designation
- Drum/Cone/Barricade/Barrier Placement
- Flagging Requirement/Location
- Uniformed Police Officer Requirement/Location

The following agency shall be contacted when preparing a TCP:

- DeKalb County Department of Public Works Transportation Division (770) 492-5222

The following publications govern the design and installation of TCP's and devices:
Manual on Uniform Traffic Control Devices (latest edition)
GDOT Standard Specifications for Roads and Structures (latest edition)
GDOT Roadway Design Manual(latest edition)

DCDWM shall obtain all road opening permits required by the GDOT. The Contractor is not permitted to make any type cuts on roadways requiring a permit from the GDOT until such time as the permit is provided and prominently displayed on-site.

All highway utilities and traffic controls are to be maintained and work shall conform to the rules and regulations of the authorities, including the use of standard signs.

14. Bore and Jack

a) *Casing Pipe*

Casing pipe shall be new and unused pipe. The casing shall be made from steel plate having a minimum yield strength of thirty-five thousand (35,000) PSI. The steel plate shall also meet the chemical requirements of ASTM A36, latest edition. The outside of the casing pipe shall be coated with coal tar epoxy having a minimum dry film thickness of sixteen (16) mils. Surface preparation shall be SSPC-SP-10. Epoxy shall have a minimum solids content of sixty-five (65) percent by volume and shall be air or airless spray applied; minimum drying time shall be seven days. Brushing shall be permitted in small areas only. All coating and recoating shall be done in strict accordance with the manufacturer's recommendations. Epoxy shall be Tnemec, Carboline, or Valspar.

The thicknesses of casing shown below are minimum thicknesses. Actual thicknesses shall be determined by the casing installer, based on its evaluation of the required forces to be exerted on the casing when jacking. Any buckling of the casing due to jacking forces shall be repaired at no additional cost to DCDWM.

The diameters of casings listed below are the minimum to be used. Larger casings, with the County Engineer's approval, may be provided at no additional cost to the DCDWM, for whatever reasons the Contractor may decide, whether casing size availability, line and grade tolerances, soil conditions, etc. Casing and pipe support installation requirements are provided in Standard Detail W-024, Appendix D.

b) *Casing Sizes:*

Under railroads, the Contractor shall provide uncoated casings, unless otherwise required. The Contractor shall supply casing in accordance with the encroachment permits that are issued.

Minimum Casing Sizes Under Railroads or Highways

Pipe Diameter (inches)	Casing Diameter, (inches)	Wall Thickness, (inches)	
		Coated	Uncoated
6	14	.250	0.282
8	18	.250	0.313
10	20	.281	0.344
12	22	.312	0.375
14	24	.344	0.407
16	30	.406	0.469
18	30	.406	0.469
20	32	.438	0.501
24	36	.469	0.532
30	42	.500	0.563
36	48	.625	0.688
42	54	.750	0.813

c) *Casing Spacers*

Casing spacers shall meet one of the following requirements:

Casing spacers shall be flanged, bolt-on style with a two-section stainless steel shell lined with a PVC liner, minimum 0.09-inch thick having a hardness of eighty-five (85) to ninety (90) durometer, minimum fourteen (14) gauge band and ten (10) gauge risers, with two (2) inch wide glass reinforced polyester insulating skids. Runners shall be attached to stainless steel risers which shall be properly welded to the shell. The height of the runners and risers shall be manufactured such that the pipe does not float within the casing. Casing spacers shall be as manufactured by Cascade Waterworks Manufacturing Company, Pipeline Seal and Insulator, Inc., or Advanced Products and Systems, Inc.

15. Work within GDOT Right-of-Way

All roadway restoration shall be done in accordance with the lawful requirements of the authorities within whose jurisdiction such pavement is located. All highway utilities and traffic controls are to be maintained, and work shall conform to the rules and regulations of the authorities, including the use of standard signs. The Contractor shall furnish all such bonds or checks which may be required by the highway authorities to ensure proper restoration of paved areas.

E. Construction Oversight

1. General

When calling for an inspection, state whether it is preliminary, final, or other specific type of inspection. No approval of a project will be granted by the DCDWM until all

inspections are conducted, no defects noted, and all appropriate documents have been received and accepted. Letters of preliminary and final inspection/approvals will be sent to Developers and/or Contractors by the DCDWM and placed in Department files.

Jobsites shall be landscaped to an equal or satisfactory condition as presented prior to start of construction activities. Any damage to the existing system occurring during construction activities shall be promptly reported to the proper authorities so that proper action may be taken.

Any and all cleaning of a newly installed system prior to inspection/approval must be such as not to impair and/or damage an existing system.

2. Inspection Prior to Installation

Pipe shall be inspected and tested at the mill or warehouse by an independent testing laboratory to determine conformity with the requirements of ASTM Standards. Signed and dated certificates stating results of inspection and tests shall be filed with the DCDWM.

Prior to lowering pipe and appurtenances into the trench, a field inspection may be conducted.

3. Final Inspection

a) *General*

Record drawings shall be submitted with elevations to mean sea level, valve coordinates, meter box coordinates, and stub locations shown.

Pressure test, fireline inspection, backflow prevention test results, and disinfection reports shall be submitted. Also, all paperwork shall be submitted, e.g. engineering certificate, labor agreement, Contractor's proof of insurance, compaction test results, release for water main constructions, and water main construction documents. A copy of the "Release for Water Main Construction" form is presented in Appendix F.

F. Testing

1. Pressure and Leakage Testing

Pipes, fittings, and appurtenances shall be laid in such a manner as to leave joints water-tight. After the pipe is laid, each section, as may be determined or defined by DCDWM, shall be properly and adequately flushed, all air removed, and then tested under a hydrostatic pressure of **two hundred (200) PSI** as measured at the lowest elevation of the test section. Where static pressure exceeds one hundred (100) PSI, the test pressure, as measured at the lowest elevation of the test section shall be equal to one hundred and fifty percent (150%) of the normal working pressure or one

hundred percent (100%) of the pipe's rated pressure, whichever is less. If elevation differentials, within a test section, vary by more than forty-five (45) feet, then the section shall be broken into shorter lengths by the insertion of additional valves.

All stub-outs, for future construction, shall be flushed and included in the pressure test. Each stub-out shall be properly plugged, braced, and tested with the stub-out valve open. Following a successful pressure test, all stub-out valves shall be left in the "closed" position. As stated previously, permanent dead ends shall be equipped with hydrants or blowoff assemblies.

All testing of water mains, fittings, and appurtenances shall be conducted in the presence of the DCDWM Project Inspector, and under his direction. Pre-testing of water mains is allowed. To facilitate the testing, the Contractor shall furnish: 1) a pressure gauge (pressure range from zero (0) to three hundred (300) PSI with a minor graduation of one (1) PSI) for measuring the pressure on the water main; 2) a corporation cock in the main for pressure pump connection; 3) suitable pump, piping, appliances, labor, and other items necessary to conduct the pressure test; 4) a valve wrench and laborer to accompany the DCDWM Project Inspector to verify that all valves, including fire hydrant branch valves, are fully open during the pressure test. Each section of pipe shall be filled slowly with water and the specified test pressure shall be applied by means of a pump connected to the pipe in a satisfactory manner. The pump shall operate by pumping water from a separate reservoir into the main to be tested, until the specified test pressure is attained. The DCDWM shall furnish all water necessary for flushing and testing of the main. The Contractor shall provide whatever means necessary to transport or convey the water from a designated source to the main.

NOTE: THE USE OF FIRE HYDRANTS AS A CONNECTION FOR EITHER HYDROSTATIC TESTING OR INJECTION OF CHLORINE SOLUTIONS FOR DISINFECTION IS EXPRESSLY PROHIBITED.

Before applying the specified test pressure, all air must be expelled from the pipe. To accomplish this, it may be necessary for the Contractor, to install additional service taps at the highest elevations, including any intermediate points, of the section of the pipe to be tested, or at locations directed by DCDWM. Any such taps installed, must be removed by the Contractor prior to final acceptance of the main.

The test pressure shall be maintained for a minimum of **two (2)** hours with no more than a loss or gain of five (5) PSI during the testing period. This will allow for thorough examination for leakage and permit the DCDWM Project Inspector to confirm that all air has been removed and that all valves within the test section of pipe are fully open. A copy of the Pressure Test Form is provided in Appendix G.

As stated previously, all backflow assemblies shall be tested at the time of installation and at least annually thereafter.

2. Disinfection

Before being placed in service all new water main and accessories shall be disinfected by the continuous-feed method of disinfection in accordance with the latest edition of AWWA C651 – Standard for Disinfection of Water Mains, unless otherwise noted in these Standards. All chlorinating equipment, materials, labor, and supplies shall be furnished by the Contractor.

Prior to chlorination, all mud, dirt, debris, or other foreign matter shall be removed from the pipe line by a thorough flushing using fire hydrants or other approved means. Each valved section of newly laid pipe shall be flushed independently. This shall be done prior to the pressure test to ensure removal of any trapped air within the pipe.

Chlorine will be injected into the section of line being disinfected so that its entire capacity will be filled with water containing chlorine in the amount of fifty (50) parts per million (ppm) or in such quantity as determined by the DCDWM. The preferable point of application of the chlorinating agent should be at the beginning of the pipeline extension, or any valved section of it. Application shall be through a corporation stop tapped into the newly laid pipe by means of a tapping saddle. Back pressure, causing a reversal of flow in the pipe being treated, shall be prevented. Temporary disinfection jumper for injection and sampling during disinfection and testing is provided in Standard Detail W-017, Appendix D.

USE OF FIRE HYDRANTS AS A POINT OF APPLICATION OF THE CHLORINATING AGENT IS SPECIFICALLY PROHIBITED.

The sterilizing agent shall be introduced at one end of the section and the water released from the opposite end until the sterilizing agent is present at the discharge end in such quantity as to indicate a residual chlorine of fifty (50) ppm or as otherwise determined by the DCDWM. All valves shall then be closed and the sterilizing solution permitted to remain in the pipe line section for not less than twenty-four (24) hours.

Following chlorination, all treated water shall be thoroughly flushed from the newly laid pipe at its extremities. This process shall continue until water sampled throughout the newly laid pipe tests chemically the same for residual chlorine as the water being served through the existing pipelines.

During the process of chlorinating the newly laid pipe, all valves or other appurtenances shall be operated to ensure the chlorinating agent is equally distributed throughout the pipeline.

NOTE: WHEN THE ENVIRONMENTAL LABORATORY REPRESENTATIVE ATTEMPTS TO OBTAIN AN ACCEPTABLE SAMPLE, IF THEY OBSERVE AIR, DISCOLORED WATER, TRASH, DEBRIS, TOO HIGH OR NO CHLORINE

RESIDUAL IN THE WATER, NO SAMPLE WILL BE TAKEN UNTIL THE MAIN IS RE-FLUSHED.

Due to the proximity of creeks, streams, ponds, or other bodies of water, the Contractor may be directed by DCDWM to de-chlorinate any water flushed from the main to prevent damage to aquatic organisms, plants, fish, etc. Method and system of de-chlorination must be pre-approved by DCDWM. Should the bacteriological test fail due to bacterial growth, the Contractor shall be directed to re-chlorinate the entire pipeline.

Unless DCDWM directs otherwise, cuts made into existing lines for the insertion of valves or fittings, for repairs, or for any other purpose, shall be disinfected by thoroughly wetting the interior of the pipes, valves, fittings, etc. with a sprayed-on solution having a residual chlorine of two hundred (200) ppm.

3. Microbiological Test

After flushing, the Contractor shall notify the Scott Candler Filtration Plant Laboratory, (770)391-6055, that the main is ready for a bacteriological sample to be processed. Once the sample is processed, it must remain in incubation a minimum of twenty-four (24) hours before a "sample passed" certification from the Filtration Plant Laboratory can be obtained. The accepted water sample station assembly is provided in Standard Detail W-028, Appendix D.

G. Final Approval

1. General

The Final Plat will be signed by DCDWM after the following items have been submitted and accepted by the Department:

- Approval by DCDWM of installation, inspection(s) and testing(s).
- Submission of signed record drawings.
- Submittal of Construction Completion Form

2. Construction Completion Form

Contractor/Developer is to send Inspector acceptance reports to DCDWM, 1580 Roadhaven Drive, Stone Mountain, Georgia 30083. DCDWM shall send the “Construction Completion Form” once the as-built drawings are approved. Contractor/Developer must submit a completed “Construction Completion Form” to DCDWM prior to final plat approval. A copy of the form is provided in Appendix G.

3. Record Drawings

Record drawings (as-builts) must be submitted to DCDWM before a project can receive final approval, and/or Certificates of Occupancy. (NOTE: In order to avoid delays in the "approval process" of developments/subdivisions, as-built drawings should be submitted as soon as the water main installation is complete to allow sufficient time for review).

Record drawings must be sharp, clear, clean, legible, and submitted on twenty (24) inch by thirty-six (36) inch plain paper and the electronic MicroStation V8 files shall be submitted on CD, or DVD. The MicroStation files shall follow the format and requirements presented in Appendix C for all water appurtenances. The files should also contain x, y, and z coordinated for all appurtenances using the County's approved coordinate plane.

Record drawings shall include a site plan and any supplemental or shop drawings as may be required by DCDWM.

One (1) complete set of record drawings and one (1) copy of the electronic files must be submitted by the Developer or Developer's Engineer to DCDWM for review and approval.

Record drawings must be stamped and signed by a Professional Engineer or Registered Land Surveyor licensed in the State of Georgia.

4. Guarantee of Work

The Contractor (and Developer in private developments) shall guarantee for a period of twelve (12) months from the date of final acceptance (from date of final plat approval or Certificate of Occupancy in private developments), all water mains, appurtenances, trenches, roadway and surface restorations, landscaping, and any other areas disturbed by the construction of the project, to be free from defects, and to be installed in compliance with all regulations, specifications, plans, directions, and construction practices which govern said installations.

The Contractor shall be responsible for repairs to any leaking pipe, fittings, etc. Should trenches settle during the warranty period, Contractor shall promptly furnish and place fill to the original grade and restore any damaged landscaping. Should any leaks or trench settlement occur under new pavement, the Contractor will be held responsible for the cost of all repairs, including pavement replacement.

The determination of the requirement for the Contractor to perform work under this guarantee shall be at the sole discretion of DCDWM.

III. GRAVITY SANITARY SEWER STANDARDS

A. Review and Approval Process

Design plans shall be submitted to the DeKalb County Department of Planning and Development (DCDPD) for review and approval. All submittals and re-submittals and retrievals of approval are processed by the DCDPD. DCDPD is located at 330 West Ponce de Leon Avenue, Decatur, Georgia, 30030 and can be reached at (404)371-2518. The design plan review process Flow Chart is presented in Appendix A.

B. Submittal Requirements

1. General

Four (4) sets of 24”x36” design drawings and one (1) electronic copy on compact disc (CD) (in MicroStation V8 and PDF formats) of design drawings shall be submitted. MicroStation electronic files shall follow the format and requirements presented in Appendix C: Digital File and CADD Requirements.

The plan set shall also include a legend depicting symbols used in the drawings, general notes pertinent to DCDWM requirements, and DCDWM standard details used within the plan set.

A “Gravity Sanitary Sewer System Plan Checklist” has been provided in Appendix H.

2. Information to be Shown

The title block presented on each sheet shall include the name of the development; phase or unit of development (if applicable); Land Lot and District; name, address and phone number of Developer and Developer’s Design Engineer; and Professional seal of Developer’s Design Engineer with signature.

A cover sheet shall be included with a drawing index. The cover sheet shall also include an approval block for DCDPD signature. Cover sheet shall include a location map with north arrow.

a) *Plan View*

Plan view shall have a scale of not more than fifty (50) feet to the inch [1” = 50’]. Show all location, size and material of construction for all proposed pipelines within the project area. The proposed gravity sanitary sewer lines shall be shown on the plans as solid lines with size, material, use, and pipe class called out; for example “8-inch DIP (SS)-Class 350” or “8-inch PVC (SS)-SDR35”. Plans shall show the location of all gravity sanitary sewer lines and manholes including the deflection angle at each manhole. Manholes shall be numbered on the plans. Plans shall also show any lift stations adjoining the gravity sanitary sewer system. Pumping Station and Force Main Standards are located in Section IV of these

Design Standards. All proposed and existing easements shall be shown. Service connections with cleanouts (one per lot) shall be shown on the plans; including, distance to nearest manhole and length of service line. Tables shall be provided in the plans identifying the following gravity sanitary sewer information; example information is provided:

Example Gravity Sanitary Sewer Schedule

MH #	Rim Elev. (ft)	Invert In Elev. (ft)	Invert Out Elev. (ft)	Pipe Segment (From /To)	Pipe Length (ft)	Pipe Material and Class	Slope %
SS1	1024.62	1019.20	1019.20	SS1/SS2	250	8" DIP-Class 350	1.2
SS2	1023.9	1018.9	1018.9	SS2/SS3	262	8" PVC-SDR35	1.8

Example Gravity Sanitary Sewer Stub Location

Lot #	Sewer Stub #	Northing	Easting
23	182	672908	476298
24	183	543206	354320

Plans shall show all other buried existing or proposed utilities, including storm and gravity sanitary sewers, drywells, potable water mains, buried telephone, natural gas, power, and cable TV lines, within the project area that are concurrent with proposed gravity sanitary sewer construction. Existing utilities should be shown to the extent known, given records available to the Developer's design engineer. Existing utilities shall be shown as dashed lines. Construction details should note that all buried utilities are to be field located prior to construction.

Plans shall show the tie-in point(s) of the proposed gravity sanitary sewer system to the DCDWM existing system. Plans shall include typical construction details of all tie-ins to existing pipelines and structures; typical trench cross-sections including bedding, backfill, and compaction requirements; manhole; and service connection details. Gravity Sanitary Sewer standard details are provided in Appendix I.

The project benchmarks shall also be shown and referenced to state plane coordinates.

b) *Profile View*

Profiles shall show each manhole, sanitary sewer line, lift station, utility crossings etc. as referenced on the plan view. Profile shall list the slope, service line distance to sanitary sewer line, pipe utility use and material, size of pipe and bedding materials. Manholes shall be referenced by station and manhole number, including rim elevations and inverts to the nearest 0.00'. Profile information shall also include any outside drop connection design information. Profiles shall have a vertical scale of not more than ten (10) feet to the inch.

C. Design Criteria

1. Location

a) *Gravity Sanitary Sewer Laying Distance*

DCDWM standard location for gravity sanitary sewers lines shall be as follows:

(1) Sanitary sewers shall be laid with straight alignments between manholes. Curvilinear sanitary sewers are not permitted.

(2) Sanitary sewer lines shall be located as near the center of the street as practical.

(3) Shall be located a minimum of four (4) feet from the curb under the pavement.

(4) Shall be located within the public right-of-way.

(5) Shall provide a minimum of ten (10) feet of horizontal clearance from any building, structure, water main or other utility, when practical.

(6) Maximum distance between manholes for sanitary sewer lines under twenty-four (24) inches: four hundred (400) feet.

(7) Maximum distance between manholes for sanitary sewer lines twenty-four (24) inches to thirty-six (36) inches: five hundred (500) feet.

(8) Maximum distance between manholes for sanitary sewer lines over thirty-six (36) inches: eight hundred (800) feet.

(9) Six (6) inch laterals shall not cross property lines.

b) *Manhole*

DCDWM standard location for gravity sanitary manholes shall be as follows:

(1) Manholes shall be a minimum of four (4) feet from the curb line at the pavement.

(2) Manholes shall be within the public right-of-way.

(3) Manholes shall have a minimum of four (4) feet of clearance from drainage culverts and other underground utilities.

(4) Manholes outside of the right-of-way shall be centered within the sanitary sewer easement.

c) *Easement*

"On site" easements are those easements falling within the boundaries of the current phase of the project. For subdivisions, these are shown on the plat and are dedicated through the process of recording the final plat.

"Off-site" easements are those easements falling outside the boundaries of the current phase of the project. Off-site easements which will be included in later phases of the same project and which cross property owned by and titled to the exact same entity as the one developing a subdivision may be dedicated by the final plat of the current phase of the project.

Off-site easements must be submitted to and approved by DCDWM prior to issuance of off-site construction permits by DCDWM. All easements, either off-site for all projects or on-site for commercial projects, must be submitted and approved prior to final inspection.

Conditional easements or easements with special stipulations shall not be granted to or assigned to DCDWM.

Separate easement documents with plats and/or legal descriptions are required when obtaining easements from more than one landowner.

Construction of off-site lines shall not begin until all off site easements are acquired and submitted to DCDWM. Construction of on-site lines, prior to acquiring off-site easements, is at the Developer's own risk.

Off-site easements are to be negotiated by the Developer with the property owner. As a last resort, if the Developer is unable to acquire necessary easements through negotiation, DCDWM may request the DeKalb County Board of Commissioners' (BOC) approval to assist in acquisition through condemnation at the Developer's expense. Final decision whether or not to condemn rests with the BOC.

A property can be condemned for easements only if the sanitary sewer line to be installed is a gravity line eight inches in diameter, or larger, or if a force main from a DCDWM pumping station is to be dedicated to DCDWM.

No permanent structures or trees are allowed in sewer easements.

Sanitary sewer lines must be centered within the required permanent easement. Exceptions can be approved by DCDWM, but will only be approved in special circumstances and when DCDWM determines that future repairs and maintenance can be accomplished without unreasonable difficulty.

Minimum temporary easement widths for gravity sanitary sewer lines shall be as listed in the following table:

Table: Minimum Temporary Easement Widths per Main Diameter

Main Diameter	Cover Depth	Minimum Easement Width
15” and less	<8 ft.	15 ft
15” and less	8-16 ft.	20 ft
15” and less	16 ft – 22 ft	25 ft
15” and less	23 ft – 30 ft	30 ft
16” to 30”	<16 ft.	25 ft
16” to 30”	16 ft – 22 ft	30 ft
16” to 30”	23 ft – 30 ft	40 ft
Greater than 30”	Any	50 ft

Permanent easements shall be minimum fifty (50) feet in width; DCDWM retains the right to require a wider easement to be provided.

For any easement that is acquired for less than $10,000, a release from lien holders is not required. Entities having ownership must sign the easement as stated below:

FOR CORPORATIONS, Georgia law requires that documents transferring interest in real estate property must be signed by the president or vice president of the corporation and be attested by the secretary or treasurer of the corporation or have the corporate seal affixed.

FOR LIMITED LIABILITY COMPANIES, Georgia law requires that documents must be signed by a member.

FOR LIMITED PARTNERSHIP, Georgia law requires that documents must be signed by the general partner. If the general partner is a corporation, set up the "by" signature block in accordance with laws for corporations.

FOR GENERAL PARTNERSHIP, Georgia law requires that documents must be signed by every partner.

FOR TRUSTS, Georgia law requires that documents must be signed by every trustee for the trust.

FOR INDIVIDUALS, Georgia law requires that documents must be signed by every individual holding title exactly as each took title.

Every signature on a document must be witnessed by an unofficial witness and notarized. Notary's seal must be affixed, (Note: Examples of DeKalb County Sewer Easements for Entities and Persons are provided in Appendix J.)

A plat (8-1/2" x 14" maximum) which shows the boundary of the easement area or a written legal description that can be followed on a submitted site plan must be attached to each easement document and labeled as ATTACHMENT "A".

All development projects, including gravity sanitary sewer and other non-sewer related projects, are required to either install a gravity sanitary sewer line to the upgrade property line(s) for future use or the final plat must show a twenty (20) feet permanent sanitary sewer easement and a forty (40) feet temporary sanitary sewer easement. The discretion of where sewer for adjacent properties is required shall lie solely with DCDWM. Easements for future use shall comply with stream buffer and wetland requirements, see Section III.C.5.a Sanitary Sewer Installation near Water Bodies and Wetlands.

2. Size

a) *General: Gravity Sanitary Sewer Lines*

Gravity sanitary sewer lines shall be sized to accommodate the peak design flow subject to the following limitations:

(1) The d/D ratio for gravity sewer pipes shall not be greater than 0.8 at the peak flow condition.

(2) The minimum size for a sanitary sewer collection line is eight (8) inches. The minimum size for a sanitary sewer service line is six (6) inches.

b) *Design Basis: Gravity Sanitary Sewer Line*

Gravity sanitary sewer systems shall be designed on the basis of per capita flows for the design period in conjunction with a peaking factor, or approved alternative methods. Design calculations for trunk and interceptor sewers shall be submitted to DCDWM for approval. Larger systems should have hydraulic modeling performed. Replacement mains or rehabilitations of existing mains shall be designed on the basis of measured flows with projections for the design period as applicable. Documentation of the alternative method shall be provided upon request.

(1) Average Daily Flow:

The Average Daily Flow (ADF) that a site will generate is calculated based on the particular use of the site. The table below shows sanitary flow generation factors, in gallons per day (gpd), which can be used to estimate sanitary flows from proposed and existing developments.

Table: Sanitary Flow Contributions from Site Specific Sources*

Contributor	Sanitary Flow, gpd
Airports, Railroads, Bus Terminals	5/Passenger + 10/Employee
Stadiums, Racetracks, Assembly Halls	5/Seat
Bar/Lounge	30/Seat
Barber Shop/Beauty Salon	125/Chair +20/Employee
Bath House for Swimming Pool	10/Swimmer
Boarding Houses	75/Resident
Bowling Alley	75/Lane+20/Employee
Car Wash (non-recycling)	75/Car
Church	5/Sanctuary Seat
Campgrounds without Sewer Connections	100/Space
Campgrounds with Sewer Connections	150/Space
Country Club	25/Member
Day Camp	20/Person
Day Care Center	15/Person
Dental Office	20/Employee + 100/Chair
Fitness Center/Spa	50/Person
Food Service – Restaurants Open 24 Hours/day	75/Seat + 20/Employee
Food Service – Restaurants Open Less than 24 Hours/day	50/Seat + 20/Employee
Food Service Catering	50/100-s.f. Floor Space
Funeral Home	300/Embalming + 100/Employee
Grocery Store	200/1000 s.f. Floor Space
Hospital	300/Bed + 100/Resident Staff
Hotel/Motel	100/Room
Laundry	500/Machine
Medical Offices	200/Exam Room
Nursing Home	150/Bed + 100/Resident Staff
Prison	125/Bed + 20/Employee
Resident Camps	60/Person
Residential Homes	150/Bedroom
Retail Stores	Larger of 400/Restroom or 100/Fixture
Schools – Day, Toilets Only	12/Person
Schools – Day, Toilets, Cafeteria	16/Person
Schools – Day, Toilets, Cafeteria, Gym	20/Person
Service Station	20/Person
Shopping Center/Mall	100/1000-s.f. Enclosure Space
Theaters	5/Seat
Veterinary Office	100/Run + 10/Cage + 20/Employee

*Flow Estimating Factors based upon Georgia Environmental Protection Division *Large Community Design Guidance, Appendix A* (March 2005)

(2) Peak Flow:

Generally, the sewers shall be designed to carry at least the peak hourly flow when operating at capacity. Peak hourly flow should be the design ADF in conjunction with a peaking factor. The peaking factor formula to be used is:

$$PF = \frac{18 + (P)^{0.5}}{4 + (P)^{0.5}}$$

Where P is the population in thousands. The above equation yields a peaking factor that is intended to cover normal infiltration and inflow for a well-maintained sewer system and/or those built with modern materials and construction methods. The peaking factor shall not be less than two and one-half (2.5). Where P is not known or cannot be reasonably assumed PE (Population Equivalence) can be used. PE is Q (flow in gpm) divided by one hundred (100) gpcd for new systems and one hundred and twenty-five (125) gpcd for existing systems.

(3) Infiltration/Inflow:

Use of the per capita flows and the peaking factor is intended to cover normal I/I for systems built with modern construction techniques. However, an additional allowance should be made for I/I with existing conditions such as high ground water, older systems, or a number of illicit connections. I/I for existing systems should be made from actual flow data to the greatest extent possible.

c) *Diameter: Manhole*

The minimum inside diameter of manholes shall be forty-eight (48) inches. For incoming pipe larger than twenty-four (24) inches in diameter, or where penetration locations require, the manhole shall be fifty-four (54) inches or greater, in diameter. For manholes with a depth greater than twenty (20) feet, or incoming pipe larger than thirty-six (36) inches, the inside diameter shall be seventy-two (72) inches. Manholes are mandatory when connecting significant industries to the system and should be of adequate size to provide for monitoring and sampling equipment; see Section III.C.7.e Test Manholes.

3. Depth of Pipe Burial

The minimum depth of cover over a sanitary sewer line within the road right-of-way shall be seven (7) feet. Cover less than seven (7) feet within right-of-way requires the use of ductile iron pipe and will only be approved when site conditions dictate.

The minimum depth of cover over a sanitary sewer line in un-paved areas shall be four (4) feet. Cover less than four (4) feet in unpaved areas requires the use of ductile iron pipe and will only be approved when site conditions dictate.

Any sanitary sewer line parallel to a creek or stream shall be designed such that the top of the proposed pipe is one (1) foot below the bottom of the creek bed. The elevation of the creek bed must be indicated on the plans. Refer to Section III.C.5.a, Sanitary Sewer Installation near Water Bodies and Wetlands, for design information pertinent to sanitary sewer installation near creeks, streams, and wetlands.

4. Slope of Gravity Sanitary Sewer

a) *Minimum Slope and Velocities*

Gravity sanitary sewers shall be designed and constructed to provide minimum velocities as shown in the table below, based on Manning's formula, flowing full, and using an "n" value of 0.012. The minimum slopes required to maintain the minimum velocity are also shown in the table below. Designers shall minimize grade changes throughout the entire pipeline project. Slopes are to be uniform from manhole to manhole.

Table: Gravity Sanitary Sewer Minimum Velocity and Slope

Pipe Size, Inches	Minimum Design Slope, %
6	0.8
8	0.8
10	0.8
12	0.8
15	0.205
18	0.170
21	0.146
24	0.127
27	0.115
30	0.102
36	0.085
42	0.073
48	0.064
54	0.058
60	0.051

b) *Slope for Bore and Jack Installations*

Whenever possible, designs for bore and jack installations should include a drop in the upstream manhole of not less than six (6) inches and should allow a slope through the bore three (3) times as steep as the recommended minimum slope for that size pipe.

5. Special Design Considerations

a) *Sanitary Sewer Installation near Water Bodies and Wetlands*

(1) Any sanitary sewer line adjacent to a creek or lake must be indicated on the plans. Creek crossings shall be made only when absolutely necessary and should be single welded pipe, encased, and constructed nearly perpendicular to the creek. Creek crossings shall be stabilized with rip-rap and/or other stabilizing material upon completion as directed by DCDWM. Sanitary sewer lines shall be designed to cause minimum impact to waters of the United States.

(2) All gravity sanitary sewer designs must comply with U.S. Army Corp of Engineers regulations pertaining to construction in wetlands and nationwide permits. When applicable, plans must show jurisdictional wetland boundaries.

(3) Floatation calculations shall be provided for sanitary sewers and the relative appurtenances when high water tables are present. Enough weight must be added to the manhole to prevent floatation; i.e. thicker slab, wall, or anti-floatation collar.

b) *High-Velocity Protection*

To minimize erosion of the pipe, the maximum velocity (at d/D = 0.80) shall be nine (9.0) feet per second.

Sanitary sewers on sixteen (16) percent slopes or greater shall be anchored securely with concrete, or equal.

Anchors shall be spaced as follows:

(1) Not over thirty-six (36) feet center to center on grades sixteen (16) percent and up to thirty-five (35) percent;

(2) Not over twenty-four (24) feet center to center on grades thirty-five (35) percent and up to fifty (50) percent;

(3) Not over sixteen (16) feet center to center on grades fifty (50) percent and greater.

c) *Watertight Manhole Covers*

Watertight manhole covers are to be used wherever the manholes are constructed within the one hundred (100) year flood plane. Watertight manhole lids shall be bolt down.

d) *Inverted Siphons*

Siphons used for crossing bodies of water shall be considered in a case by case analysis only. Sufficient head and flow must be available to provide a velocity in the siphon of at least two (2) fps at least once per day with a minimum pipe diameter of six (6) inches. All inverted siphons shall be at least dual barrel. One barrel shall be designed to achieve the two (2) fps flow condition with the second barrel to absorb the maximum flows from the upstream sewer pipe.

6. Separation from Potable Water Sources

a) *Horizontal and Vertical Separations*

Gravity sanitary sewer lines shall maintain a ten (10) feet horizontal and eighteen (18) inches vertical clearance from potable water mains. Measurement shall be from outside of pipe to outside of pipe. If site conditions do not allow such minimum separations, DCDWM may allow deviation on a case-by-case basis, if supported by data from the Developer's Design Engineer. Such deviation may allow installation of the gravity sanitary sewer line closer to a potable water main, provided the gravity sanitary sewer line is in a separate trench or if the potable water main is on an undisturbed earth shelf located on one side of the gravity sanitary sewer line and at an elevation such that the bottom of the potable water main is at least eighteen (18) inches above or below the top of the gravity sanitary sewer line.

If it is impossible to obtain proper horizontal and vertical separation as described above, both the gravity sanitary sewer line and potable water main must be constructed of ductile iron pipe meeting DCDWM standards and shall be pressure tested to two hundred (200) PSI to assure water-tightness prior to backfilling.

b) *Crossings*

Gravity sanitary sewer lines crossing over or under potable water lines shall be laid to provide a minimum vertical distance of eighteen (18) inches between the outside of the gravity sanitary sewer line and the outside of the potable water main. The crossing shall be arranged so that the gravity sanitary sewer line joints will be equidistant and as far as possible from the water main joints. Where a gravity sanitary sewer line crosses over a potable water main, adequate structural support shall be provided for the gravity sanitary sewer line to maintain line and grade.

When it is impossible to obtain the proper vertical separation as stipulated above, one of the following methods must be specified:

- The gravity sanitary sewer line shall be designed and constructed equal to the potable water main and shall be pressure tested to two hundred (200) PSI to assure water tightness.

- Either the gravity sanitary sewer line or potable water main may be encased in a watertight casing pipe or concrete encasement which extends ten (10) feet on both sides of the crossing, measured perpendicular to the potable water main. The casing pipe shall meet the material requirements of steel casing for bore and jack crossings. Refer to Section III.D.2.a.(4), for bore and jack casing requirements.

7. Appurtenance Design Consideration

a) *Gravity Sanitary Sewer Stubs*

One six (6) inch sewer service stub shall be provided for each building. A stub is defined to be that section of pipe going from the main line sewer to the edge of the right-of-way or easement.

One six (6) inch cleanout shall be installed at the property line, edge of right-of-way or edge of easement, see Standard Details S-011 and S-017 in Appendix I.

b) *Gravity Sanitary Sewer Laterals*

The sanitary sewer lateral line located on private property shall remain in private ownership. Its maintenance shall be the responsibility of the owner. There is no maximum length limitation for privately maintained lateral lines.

c) *Drop Connection*

An outside drop connection, or pipe, shall be provided for any size sanitary sewer line entering a manhole at an elevation of more than two (2) feet above the manhole invert. Drop connections should be avoided for new gravity sanitary sewer systems; however, they may be unavoidable when connecting to existing structures.

Manholes with outside drop pipes shall be indicated on the construction plans, profile section.

d) *Doghouse Manholes*

Doghouse manholes are to be utilized for connection to existing twelve (12) inch or larger sanitary sewer lines and may be authorized by DCDWM inspector on eight (8) and ten (10) inch lines for existing high flow conditions.

e) *Test Manhole*

Test manholes shall be required for all commercial and industrial buildings and installed at locations to be approved by DCDWM.

Test manholes shall generally be of the same design and construction as other manholes and must have six (6) inch minimum sanitary sewer lines into and out of the manhole.

Test manhole covers shall be bolt down style with rubber gaskets.

Inverts of test manholes for certain industrial users may require modification for flow measuring capability; as determined by DCDWM and/or EPD.

Neither inside drops nor outside drops are permitted at test manholes.

Maintain 0.2 feet elevation drop through manhole invert.

(1) Depths

- Minimum Depth: four (4) feet, unless approved by DCDWM.
- Maximum Depth: ten (10) feet, unless approved by DCDWM.

(2) Placement

- On building lateral between service stub and where two (2) or more building laterals combine into one (1) pipe.
- Locate in non-paved area when possible.
- Within property limits of said building.

8. Design of Gravity Sanitary Sewer within GDOT Right-of-Way

If any portion of a proposed project enters a State of Georgia controlled right-of-way, then a GDOT permit application is required. Developer or Owner shall submit to DCDWM the required material in hard copy and in electronic form, on a CD. Hard copy forms, permits, and drawings, etc. must be 8 ½" X 11" in size, drawings need not be to scale. All measurements necessary for the permit application must be submitted in English. Generally, portions of the project design can be reduced in size and matchlined, if necessary, as long as the text is still legible. Compaction notes indicating compaction requirements must be included on every construction drawing required for the application (see Section III.D.11 Backfilling Trenches for backfill requirements). Submittal shall include four (4) each of the following: plan, profile, traffic control plan, and section from GDOT county map. The GDOT Permitting Checklist is provided in Appendix E.

GDOT requires the GDOT permit application to be submitted through the Georgia Utilities Permitting System (GUPS). The Developer or Owner is not to submit the GDOT permit directly through the GUPS. The Developer or Owner is to provide all necessary information, as stated in the previous paragraph, DCDWM shall review the information and provide comments (if necessary). Once the necessary information has been approved, DCDWM shall submit the GDOT permit application through the GUPS.

Traffic control shall be in accordance with the Manual on Uniform Traffic Control Devices (MUTCD), latest edition.

Trench restoration within GDOT right-of-way shall be in accordance with GDOT Standard Detail 1401 Pavement Patching Details.

All bore and jack pits must be a minimum of ten (10) feet from outside edge of pavement. Plans shall show casing size and carrier pipe size within the approach slab for bridge crossings.

All documents necessary for said application must be provided by the Developer's Engineer to DCDWM.

D. Construction Materials and Installation

1. General

At no time will any gravity sanitary sewer construction commence prior to approval of all plans, receipt of all required documents including necessary easements, issuance of sanitary sewer construction permit to approved contractor by DCDWM and a preconstruction conference held with a DCDWM Inspector (twenty-four (24) hours advance notice required).

All gravity sanitary sewer lines, manholes and other appurtenances to be governed by DCDWM shall be installed according to approved plans and profiles. If a field change must occur, the redesigned area(s) must be submitted for approval prior to installation, in accordance with Georgia Environmental Protection Division's Rules and Regulations for Water Quality Control, Chapter 391 3 6 .02 (10). Contractor must have a set of the "approved" design containing an original DCDWM stamp, and a copy of these Design Standards, current edition, on site at all times.

Contractor shall adhere to all Federal, State, County and local laws, ordinances and regulations which in any manner affect the conduct of the work, including but not limited to initiating, maintaining and supervising all safety precautions and programs in connection with the Work.

Sanitary sewer construction shall be done in open trenches and in a manner to protect lines, sanitary sewers or structures from unusual stresses.

The Contractor shall provide for the flow of all sanitary sewers, drains or creeks interrupted during the progress of the Work and shall restore same to a preconstruction condition.

At the start of construction, the Contractor shall install an air plug in the first pipe laid out of the entrance manhole and in the downgrade side of the first newly installed manhole. Said plugs shall remain in place until final inspection and approval is given

by DCDWM. Contractor must exercise extreme caution to ensure that plugs are not lost into the gravity sanitary sewer system.

The Contractor must comply with all requirements of the DeKalb County Soil Erosion and Sediment Control Ordinance, the provisions of the "Manual for Erosion and Sediment Control in Georgia," and any special conditions required by the EPD associated with any variances issued by the same, and any special conditions required by the DCDWM Inspector.

2. Acceptable Materials

a) *Gravity Sanitary Sewer Lines*

Gravity sanitary sewer lines shall be either polyvinyl chloride (PVC), ductile iron pipe (DIP), or high density polyethylene (HDPE).

- PVC - Up to twenty-four (24) inches in diameter
- DIP (polylined) - Up to twenty-four (24) inches in diameter
- HDPE - Up to twenty-four (24) inches in diameter

The material selected should be adapted to local conditions, such as, characteristics of industrial wastes, possibility of septicity, soil characteristics, exceptionally heavy external loadings, abrasion, and similar problems.

All sanitary sewers shall be designed to prevent damage from superimposed loads. Proper allowance for loads on the sanitary sewer because of the width and depth of a trench should be made. When standard strength sanitary sewer pipe is not sufficient, the additional strength needed may be obtained by using extra-strength pipe or by special construction, such as improving bedding conditions or encasing the pipe in concrete.

Sanitary sewer pipe and fittings shall be marked in accordance with the latest ASTM/ANSI designations. As a minimum, marking for pipe shall include Manufacturer's name or trademark, nominal pipe size, specification designation and date of manufacture. Pipe markings shall appear at intervals of five (5) feet or less on pipe barrel. The pipe shall conform to the applicable specifications as follows.

(1) Polyvinyl Chloride (PVC) Pipe and Fittings:

- Pipe and fittings up to fifteen (15) inches in diameter shall be made in accordance with latest revision of ASTM D3034 for Type PSM PVC (SDR35).
- Pipe and fittings eighteen (18) inches and greater shall be made in accordance with the latest revision of ASTM F679 for Type PS46 PVC, unless otherwise specified herein.

- Elastomeric gasket joints shall utilize rubber gaskets conforming to the latest revision of ASTM F477 and shall be used exclusively on all work.
- Standard pipe lengths not greater than thirteen (13) feet shall be used on all work.
- PVC laterals must have tracer wire to be traced by electronic means. This can be achieved by placing twelve (12) gauge wire over the pipe in the trench and connecting it to the manhole frame. The tracer wire shall terminate at the clean out, located in the right-of-way.

(2) Ductile Iron Pipe (DIP) and Fittings:

- Pipe shall be either push-on or mechanical joint type conforming to the latest requirements of the latest revision of ANSI Standard Specifications A21.50/A21.51, Pressure Class 350 Ductile Iron, unless otherwise specified herein.
- Provide fittings with a body thickness and radii of curvature conforming to the latest ANSI Standard Specification A21.10 and joints in accordance with the latest ANSI Standard Specification A21.11.
- Whenever connections are made between ductile iron pipe and pipe of other materials, use of an approved type of transition gasket or coupling is required.
- All pipe and fittings shall be bituminous coated at the point of manufacture in accordance with the latest revision of ANSI A21.51.

(3) Steel (Casing for Bore and Jack Only):

- Steel pipe shall be used for bore and jack casing.
- Pipe shall conform to the latest revisions of ASTM A134 or ASTM A139 with a minimum yield of thirty-five thousand (35,000) PSI. Alloy shall be in accordance with the latest edition of ASTM A36.
- Casing pipe may be uncoated and unlined.

b) *Gravity Sanitary Sewer Manholes*

Manholes shall be precast reinforced concrete construction made in conformance with the latest edition of ANSI/ASTM C478. The minimum wall thickness for a four (4) foot diameter manhole is five (5) inches.

c) *Resilient Connector (Rubber Boot)*

All pipes entering a manhole must be sealed by a resilient connection (rubber boot) meeting the latest revision of ASTM C923 such as A-Lok, Z-Lok or Kor-n-Seal. The material is to be EPDM Rubber.

d) *Concrete*

There shall be two classes of concrete, Class A for formed, reinforced cast-in-place structures and Class B for un-reinforced concrete thrust blocks, concrete cradles, concrete encasement, concrete fill and similar uses. Class A Concrete shall have a compressive strength of three thousand five hundred (3,500), four

thousand (4,000), or four thousand five hundred (4,500) PSI. Class B Concrete shall have a compressive strength of two thousand five hundred (2,500) or three thousand (3,000) PSI. No bagged or sacked concrete is allowed.

3. Trench Excavation

Excavation Methods

All excavation shall be open cut unless otherwise indicated on the "approved" design or directed by DCDWM. In general, topsoil may be removed by machine method. Excavation below topsoil may also be performed by machine, but shall be supplemented by such hand dressing or leveling as may be required to conform to lines and grades as given by DCDWM. Material so removed shall be used in backfill, making embankments, filling low areas, or as otherwise directed.

Hand tool excavation shall be used where necessary to protect existing utilities and structures.

All slopes shall be carefully cut or graded by hand to grades required by DCDWM and shall be tamped or otherwise compacted to maintain the material in position.
The final trimming of the bottoms and sides of excavations which is to be adjacent to concrete roads, sidewalks, curbs, or other structures shall be done just before the concrete is placed, or poured.

In open or improved lawn areas, excavation should be done, if possible, utilizing a tractor-mounted backhoe and extreme care should be taken to avoid damage to adjoining lawn areas. In areas not readily accessible by machinery and where excavation is required near existing trees and shrubberies which may be damaged by excavation equipment, the trench shall be excavated using hand tools.

The minimum width of trench from an elevation of twelve (12) inches above the top of the pipe to the bottom of the trench shall be as indicated on Standard Detail S-018, Appendix I.

In order to limit loads on the pipe, the maximum width of the trench shall not be more than twenty-four (24) inches wider than the outside diameter of the pipe. This trench width restriction applies from the bottom of the bedding to twelve (12) inches above the top of the pipe. Trenches greater than six (6) feet deep shall be sloped from a point twelve (12) inches above the pipe to ground surface elevation, refer to Standard Detail S-018, Appendix I.

Excavation of pipe trenches with sides sloping to the trench bottom will not be permitted.

Should trenches be excavated with more than the specified maximum widths, DCDWM may require the Contractor to furnish concrete cradles or concrete encasement for the pipe.

4. Removal of Water

The Contractor shall pump out, or otherwise remove and properly dispose of, any water (e.g. storm water and/or ground water) as fast as it collects in the excavation. Water shall not accumulate or be present in the excavated trench at any time. This removal is required regardless of the source.

All necessary precautions shall be taken to prevent disturbance at, and to properly drain, any areas upon which concrete is to be poured, or upon which pipe is to be laid.

Approved, and appropriate, equipment with sufficient capacity to remove water from the work shall be kept on site at all times. Equipment shall be used in such a manner as to not withdraw sand or cement from concrete. Contractor is also to ensure that removal of any liquids will not interfere with the proper laying of pipe, or prosecution of any of the required work for the complete construction of the project.

The flow in sanitary sewers, drains, gutters, or water courses encountered during the construction shall be adequately provided for by the Contractor to ensure these flows do not interfere with the prosecution of the Work, and are maintained in such a manner as to ensure continuity of flow at all times.

Unless otherwise permitted, ground water encountered within the limits of excavation shall be depressed to an elevation not less than twelve (12) inches below the bottom of such excavation. This depression is to be done before pipe laying or concrete work is started and shall be so maintained until concrete and joint materials have attained initial set.

If raw sewage is encountered during performance of the work, the Contractor will immediately stop work and shall notify DCDWM. DCDWM will then determine if actions by the Contractor caused the leak. Any raw sewage encountered shall immediately be pumped and hauled to a manhole, pump station, or advanced wastewater facility, as directed by DCDWM.

If other hazardous liquids or materials (as defined by the State of Georgia in conjunction with CERCLA and SARA, Title III) are encountered during performance of the work, the Contractor will immediately stop work and shall notify the appropriate State Agency and DCDWM. Hazardous liquids include, but are not limited to gasoline, diesel fuel, and industrial solvents or cleaners. The State, in conjunction with DCDWM, will then determine if actions by the Contractor caused the liquids or materials to leak or be further dispersed. Any hazardous liquids or materials shall be properly disposed of as directed by the State, in conjunction with DCDWM.

5. Sheeting and Shoring

The Contractor shall be responsible for supporting and maintaining required excavations even to the extent of sheeting and shoring the sides and ends of

excavations with timber or other supports. If the sheeting, braces, shores, stringers, wailing timbers, or other supports are not properly placed, or are insufficient, the Contractor shall provide additional or stronger supports as may be required. The requirement of sheeting or shoring, or of the addition of supports, shall not relieve the Contractor of his responsibility of their sufficiency.

Trench sheeting shall be left in place until the backfilling has been completed to an elevation not less than twelve (12) inches above the top of the pipe. Unless otherwise ordered by DCDWM, sheeting shall be cut off at the top of the lowest set of bracing and the upper section shall be removed.

Where in the opinion of DCDWM the removal of sheeting may endanger the Work, such sheeting will be ordered to be left in place and the tops cut off as directed or as specified above. Removal of the sheeting shall be done in such a manner as to prevent injurious caving of the sides. All voids left by the sheeting along trenches shall be carefully filled and rammed with suitable tools.

In quicksand or soft ground, sheeting shall be driven to such depth below the bottom of the trench as directed.

6. Bedding

Bedding materials shall be in accordance with GDOT Standard Specification Section 812, Type II Foundation Backfill.

Bedding requirements specified herein shall apply to sanitary sewer lines only. They are to be considered minimum bedding requirements and as such, do not relieve the Engineer/Contractor of the responsibility to provide any additional bedding necessary for proper construction.

The bedding material shall be placed in the bottom of the trench after it has been excavated to an elevation sufficient to permit the placing of not less than six (6) inches, or as directed. Bedding shall be carefully placed along the full width of the trench so that the pipe is true to line and grade of the pipe barrel. The surface of the bedding material shall be spread to form a uniform support for the pipe and appurtenances. After installing each section of the pipe, additional bedding material shall be placed on either side of the pipe to an elevation consistent with the bedding type specified herein, as indicated on the plans or specifications, or as directed by DCDWM. This material is to be well tamped and compacted into place so as to secure a firm, even bearing.

As used herein "carefully placed" shall be construed to mean material that has been spaded or shovel sliced so that the material fills and supports the haunch area and encases pipe to the limits specified herein.

Bell holes shall be provided in all classes of bedding so as to relieve pipe bells of all loads, but small enough to ensure that support is provided throughout the length of pipe barrel.

All excavations shall be adequately shored to ensure worker safety. All pipe laying operations shall comply with OSHA requirements for trench safety.

a) *Crushed Stone Embedment*

Material shall conform to the latest edition of ASTM C33, Gradation No. 57 varying in sizes one-quarter (1/4) inch through three-quarter (3/4) inch. Bedding material shall be carried up the sides of the pipe to the heights shown for the various classes of bedding.

b) *Class A Bedding*

Class A bedding shall be used if, in the judgment of the Engineer, soil conditions are such that a firm bed cannot be otherwise secured. The pipe shall be laid in the center of a concrete cradle having a minimum width of six (6) inches greater than the outside diameter of the pipe but shall not be greater than twenty four (24) inches greater than the outside diameter. The minimum thickness of the cradle under the bottom of the pipe shall be one-half (1/2) of the outside diameter for pipe up to twelve (12) inches in diameter. The minimum thickness of the cradle under the bottom of the pipe shall be one-quarter (1/4) of the outside diameter for pipe greater than twelve (12) inches in diameter. The maximum thickness of the cradle under the bottom of the pipe shall be twelve (12) inches. The cradle shall extend up the sides of the pipe for a height equal to one-half (1/2) its outside diameter. Refer to Standard Detail S-012 in Appendix I for Class A Bedding.

c) *Class B Bedding*

The minimum thickness of the compacted stone No. 57 bedding under the bottom of the pipe shall be one-half (1/2) of the outside diameter for pipe up to twelve (12) inches in diameter. The minimum thickness of compacted stone No. 57 under the bottom of the pipe shall be one-quarter (1/4) of the outside diameter for pipe greater than twelve (12) inches in diameter. The compacted stone No. 57 placement shall be up to one-half (1/2) of the outside diameter of the pipe. The backfill shall then be completed with selected material, hand placed and tamped, to the limits denoted in the detail. Bedding and backfill shall be placed to the full width of the trench, as excavated. Class B Bedding shall be used for PVC pipe. Refer to Standard Detail S-013 in Appendix I for Class B Bedding.

d) *Class C Bedding*

The minimum thickness of the compacted stone No. 57 bedding under the bottom of the pipe shall be one-half (1/2) of the outside diameter for pipe up to twelve (12) inches in diameter. The minimum thickness of compacted stone No. 57 under the bottom of the pipe shall be 1/4 of the outside diameter for pipe greater than twelve (12) inches in diameter. The compacted stone No. 57 placement shall be up to one-quarter (1/4) of the outside diameter of the pipe. The backfill shall

then be completed with selected material, hand placed and tamped, to the limits denoted in the detail. Bedding and backfill shall be placed to the full width of the trench, as excavated. Class C Bedding shall be used for DIP. Refer to Standard Detail S-014 in Appendix I for Class C Bedding.

e) *Flow Dams*

Flow dams may be required under certain conditions. If, in the opinion of the inspector, there is a large volume of groundwater which might follow the crushed stone bedding downhill and due to the elevation change, might build adequate pressure to create problems, then flow dams will be required. Flow dams consist of red clay bedding a minimum of three (3) feet long and spaced one hundred (100) feet along pipeline.

7. Pipe Handling

Unload ductile iron pipe and accessories from trucks with hoists or by skidding. Do not skid or roll pipe handled on skidways against pipe already on the ground. Under no circumstances are said materials to be dropped off any delivery vehicle. Should any material be accidentally dropped, it shall be immediately set aside, and thoroughly inspected by DCDWM before any decision is made regarding its acceptability. If damage occurs to the lining, make repairs or replacement as directed by DCDWM. If there is any question regarding acceptability of said suspect materials by DCDWM, the contractor shall either remove and replace the questionable materials, or obtain a sworn statement from the Manufacturer certifying the materials as "undamaged".

Use proper, suitable tools and appliances for the safe and convenient handling and laying of pipe and fittings. Take great care to prevent the coating and lining from being damaged.

Pipe may not be "strung", or laid out, along the project within existing highway rights-of-way, unless specifically directed to do so by DCDWM, and only then after receiving permission from the road authority which has jurisdiction. Pipe shall be stored in such a manner as to keep the interior free of dirt and other foreign matter.

The Contractor shall carefully examine all pipe and fittings for defects just before laying. No pipe or fitting which is known to be defective shall be laid. In the event that defective pipe or fittings are discovered after having been laid, the Contractor shall remove and replace with sound pipe or fittings in a manner satisfactory to and at no addition cost to DCDWM.

8. Pipe Laying

a) *Gravity Sanitary Sewer Lines*

Pipe shall be installed straight in alignment, true to grade and exhibit a "full moon" configuration clearly visible between manholes.

All pipe shall be thoroughly cleaned before being laid and shall be kept clean until final acceptance of the Work.

All trenches shall be kept free from water while pipe laying is in progress. Water shall not be allowed to rise to within twelve (12) inches of the bottom of the pipe until jointing is completed. Refer to Section III.D.4 for water removal requirements.

Pipe laying shall commence at the lowest manhole unless otherwise directed by the DCDWM Inspector and pipe shall be laid so that the spigot ends (if any) point in the direction of flow to prevent bedding material from entering the joint.

Clean Ring and Spigot – The gasket, groove, and pipe spigot shall be wiped clean of all foreign material.

Install Gasket – Insert the ring in the groove taking care to see that the gasket is evenly seated and free from twists.

Apply Lubricant – Lubricate the spigot end of the pipe from the pipe end to the full insertion mark. Use only the lubricant approved by the Manufacturer. After the spigot end has been lubricated it must be kept clean and free of dirt, sand or embedment material. If foreign matter adheres to the lubricated end, the spigot must be wiped clean and re-lubricated. For pipe installed in flood plains, pipe joints shall be seated using coal tar epoxy.

Assembly – After the pipe sections are aligned, the spigot end should be pushed into the bell or coupling until it hits the stop and/or the reference insertion mark is in the proper location. The recommended assembly method is the use of a bar and a block. Pullers such as a “come along” may also be used if the pipe is protected from the chain or cable.

Pipe Cutting: Whenever a pipe requires cutting to fit the line or bring it to the required location, the work shall be done in a satisfactory manner so as to leave a smooth end at right angles to the axis of the pipe. Jointing of field cut pipe shall be made in accordance with the Manufacturer's instructions.

Refer to Standard Detail S-022 in Appendix I for transition coupling requirements when transitioning between different pipe materials.

Refer to Standard Detail S-010 in Appendix I for requirements regarding the installation of a sanitary sewer line into an exiting manhole structure.

Sanitary sewer PVC pipe shall be installed with 12 gauge tracer wire over the top of the pipe; see Standard Detail S-025 in Appendix I. Connect the tracer wire to the manhole frame.

The open end of uncompleted pipe lines shall be provided with a temporary cap or plug carefully fitted so as to keep dirt, animals, and other substances from entering. This cap or plug shall be maintained in position at all times when laying pipe is not actually in progress. Temporary plug requirements for gravity sanitary sewer lines are depicted in Standard Detail S-021, Appendix I.

b) *Aerial Lines – To be avoided if at all possible*

Ductile iron pipe shall be used for all installations.

Piers shall be placed at every joint directly behind the bell or as directed by DCDWM. Whenever possible, pipe joints shall not be exposed.

Precautions against freezing, such as insulation and increased slope, shall be provided. Expansion jointing shall be provided between above ground and below ground sanitary sewers. Where buried sanitary sewers change to aerial sanitary sewers, special construction techniques shall be used to minimize frost heaving.

Provide aerial crossing detail drawings and pipe specifications on plans for review by DCDWM. The bottom of the pipe should be placed no lower than the elevation of the fifty (50) year flood. **Aerial lines shall be designed to avoid or minimize stream blockage during normal high water events.**

9. Sewer Service Installation

a) *Sewer Service Stubs*

Sewer service stubs shall have a straight alignment. Whenever practical, sewer service stubs shall be installed perpendicular to the main. Whenever possible the main shall extend near enough to the last property served such that the service stub is no more than thirty (30) degrees from perpendicular to either the main or the edge of the right-of-way. See Section III.C.7.a for gravity sanitary sewer stub design considerations.

The minimum size of sanitary service line is six (6) inches. Pipe material shall be either PVC or DIP conforming to the material requirements for main line sewer. Material requirements are presented in Section III.D.2.

Service stubs can be connected to the gravity sewer system using at a "tee", see Standard Detail S-017 in Appendix I. Six (6) inch sewer service stubs are the minimum size allowed to directly entering a manhole. Bedding for service stubs shall be the same as the main line.

As stated previously a six (6) inch cleanout shall be constructed on the service stub at the right-of-way or easement line. Cleanout requirements are depicted in Standard Detail S-011, Appendix I.

The minimum length of service stubs shall be one (1) full pipe joint or to the right-of-way line. Maximum length of stubs in road right-of-ways shall not exceed seventy-five (75) feet. Longer stubs will not be allowed solely to avoid the cost of extending the main.

For deep service connections follow requirements provided in Standard Detail S-019, Appendix I.

The termination of the stub at the property line or easement line shall be clearly marked by a minimum six (6) foot length of a four (4) inch by four (4) inch wood post or a two (2) inch PVC pipe, painted safety day-glow green in conformance with OSHA Specifications 1910.144 (Ben Meadows Company #271127 or equivalent). Service stub marker requirements are depicted in Standard Detail S-020, Appendix I.

The minimum cover at finished grade for a sewer service shall be as follows:

- At curb: Minimum five and one-half (5-1/2) feet.
- At end of stub: Minimum four (4) feet.

Cover less than five and one-half (5-1/2) feet at the curb or under any pavement requires DIP and will only be approved when site conditions dictate. The slope of the sanitary service from stub to terminal depth shall be at a minimum one percent (1.0%).

Stub shall not be deeper than is necessary to serve the lot or building.

Developer shall carve "S" into the curb directly over the sanitary service lateral as depicted in the plan view of Standard Detail S-017, Appendix I.

b) *Sewer Lateral Lines (pipe system from building to sewer service stub)*

See Section III.C.7.b for design considerations related to sanitary sewer lateral lines.

(1) Residential:

Minimum Size: four (4) inches.

Minimum Slope (one percent, 1%): one-eighth (1/8) inch per foot.

A four (4-inch) cleanout shall be located within ten (10) feet of building per plumbing code.

Backflow Preventer: Required on every building whenever the finished floor elevation is lower than the top of the nearest downstream manhole.

A maximum of one lateral system per building.

A four (4) inch to six (6) inch adapter gasket and Fernco type coupling shall be used at connection to service stub.

Damaged ends of six (6) inch stub must be sawed square prior to connection of sewer lateral.

(2) Commercial/Industrial:

Size: six (6) inches minimum;
size shall be evaluated on a case by case basis by DCDWM

Minimum slope (one percent, 1%): one-eighth (1/8) inch per foot.

Test Manhole: must be located on lateral system, in non paved area where possible, and must be on property (see Section III.C.7.e for Test Manholes).

A maximum of one (1) lateral system per building or unit.

Service lines shall be installed to the same standards as an eight (8) inch sewer line including bedding requirements.

For strip type retail centers, eight (8) inch lateral sewers will be located at least thirty (30) feet away from the building to allow food service establishments space to install an exterior grease trap. A grease trap detail is provided as Standard Detail S-024 in Appendix I.

10. Sanitary Manhole Installation

Standard sanitary sewer manholes shall be pre-cast reinforced concrete structures. A cast-in-place monolithic base may be allowed in certain locations if approved by DCDWM. All manholes shall be placed on a twelve (12) inch cushion of compacted No. 57 stone. The standard precast sanitary manhole is provided in Standard Detail S-001, Appendix I.

Follow the requirements for sanitary manhole abandonment presented in Standard Detail S-004, in Appendix I, as needed.

a) *Foundations*

Foundations of manholes for sanitary sewers shall be Class “A” concrete. The bottom of the foundation shall be at least eight (8) inches thick and shall extend at least six (6) inches past the outside of the manhole; represented in Standard Detail S-001 in Appendix I.

In the event that groundwater is present during the pouring of a cast-in-place manhole foundation, a pump shall be used to remove the groundwater. See Section III.D.4 for water removal requirements. Prior to pouring, the subgrade shall be stable, from muck, etc. After the concrete foundation has been poured, the pump shall continue to run for at least one (1) hour to enable the concrete to obtain its initial set.

b) *Precast Barrel and Base Section*

Barrel joints shall be tongue and groove and shall meet the latest revision of ASTM C443 for O-ring gaskets; see Standard Detail S-003 in Appendix I. All barrel joints shall be installed to allow no infiltration into the manhole. Care should be exercised during the handling of the precast units to avoid disturbing or damaging the gasket and to attain proper alignment of the joints. Pre-formed flexible joint sealants shall not be used on sanitary sewer manholes. Joints and lift holes shall be grouted smooth with cement grout on inside and outside.

In precast manhole construction, combination of joint lengths shall be selected to minimize the number of individual segments required to provide the total depth specified. Long joints shall be used in the bottom with shorter segments utilized for the top adjustments. The inside diameter of the manhole shall be as called out on the plans.

Manholes may be installed with a stub for future use. The stub must be one (1) full joint of ductile iron pipe with mechanical joint plug.

c) *Manhole Cone*

Manhole cones shall be precast concrete. The top elevation of manhole frames shall be adjusted to grade in areas such as streets, alleys, and parking lots or where indicated on the plans. A maximum adjustment of eight (8) inches will be allowed precast concrete adjusting rings.

Adjustments greater than twelve (12) inches must be made by changing precast riser sections.

The top of the wall of all manholes shall be leveled off with mortar so as to form a flat surface upon which the manhole frame is to rest.

d) *Rehabilitation/Restoration of Brick within Existing Manholes*

Surfaces to be restored shall be abrasive blasted or hydroblasted with four thousand (4,000) PSI water pressure in accordance with SSPC SP13 / NACE 6 to remove all laitance, loose or damaged concrete and grout, oils, greases, chemical contaminants and previously applied coatings or sealers. Hydroblast brick mortar joints to a depth of one-half (1/2) inch to remove all loose material and to provide a clean, firm surface. Suitably prepared concrete and brick shall have a surface texture resembling coarse sand paper with substrate aggregate slightly exposed.

After surface cleaning, all visible pressure leaks shall be sealed using hydraulic cement in accordance with Manufacturer's instructions. All leaks shall be stopped prior to application of protective coating.

After leaks have been sealed using hydraulic cement, the area shall be spray coated with S-301, manufactured by Warren Environmental Inc., installed per Manufacturer's recommendations. Surface preparation, thickness, mixing and application shall be in accordance with the Manufacturer's instructions.

e) *Pipe Penetrations*

Openings in precast bases to receive sanitary sewer pipes shall be cast at the factory at the required locations, size and height. Openings cored into manholes in the field will be permitted only when prior written approval is given by DCDWM.

Resilient connectors, or rubber boots, shall be cast into the manhole by the precast Manufacturer. See Section III.D.2.c for approved rubber boot material requirements. Rubber boot shall be secured to pipe by stainless steel clamp and bolt assembly conforming to the requirements of ASTM C923 and ASTM A167, most current edition. All stainless steel elements of the rubber boot shall be totally non-magnetic Series 304 stainless steel, except the worm screw for tightening the steel band around the pipe which shall be Series 305 stainless steel. The rubber boot shall be installed per the Manufacturer's directions.

New pipe entry shall be at no less than a ninety (90) degree angle from direction of flow of existing manhole, unless the minimum inside drop is equal to the diameter of the lower pipe.

Upper pipe connections shall not enter manhole at barrel joint.

Pipes entering the manhole base shall be installed flush with the inside wall of the manhole.

Where sanitary sewer line is to be extended in the future, the manhole shall be furnished with a flexible sleeve and one joint of DIP with the upper end plugged.

f) *Manhole Coring*

The contractor shall be responsible for performing manhole corings with proper coring equipment. Minimum distance between cores shall be twelve (12) inches. Missed cores or cores into a joint are not allowed and shall result in the entire section being replaced. All pipe cores must be grouted three hundred and sixty (360) degrees around the rubber boots.

The coring must not be backfilled until approved by the DCDWM Inspector. Failure, for any reason, to have the DCDWM Inspector approve the coring will

cause all work to be halted until the cored manhole is excavated and the rubber boot exposed.

Boring or breaking into manholes is prohibited and shall require replacement of the damaged sections.

Cores for "future development" or "future tie-ons" are only approved for an eight (8) inch stub and are only allowed when installed with a rubber boot, one full joint of ductile iron pipe, and a mechanical joint cap.

g) *Inverts (Channels) and Benches*

The flow invert, or channel, straight through a manhole shall be made to conform as closely as possible in shape and slope to that of the connecting sanitary sewers. Rowlock (brick) or precast inverts are required. Crushed stone filler may be utilized under the bench, or table. Earth filler will not be allowed. Minimum drop across manhole invert shall be two-tenths (0.2) of a foot to prevent solids deposition. Drops of one-tenth (0.1) of a foot across inverts will only be permitted when site topography will not allow drops of two-tenths (0.2) of a foot.

The invert walls shall be formed, or shaped, to the full height of the crown of the outlet sanitary sewer in such a manner as to not obstruct maintenance, inspection, or flow in the sanitary sewers. When changing line sizes, the crowns (top insides) of the pipe shall be matched unless otherwise approved by DCDWM. All new invert channels at tie-in manholes must meet existing invert channel in a manner that provides proper hydraulic flow. Inverts formed with half pipe are not allowed. The invert of the manholes shall be shaped and smooth so that no projections will exist and flow channels will be formed in the inverts so that the manhole will be self-cleaning and have smooth flow transitions. Inverts shall be free of areas where solids may be deposited.

Where curved flow inverts are specified in manholes, including branch inlets, slopes shall be increased as required to maintain acceptable velocities. Inverts shall be constructed with the same radius as the outflow pipe; see Standard Detail S-009 in Appendix I.

Inverts of test manholes may require special modifications (see Section III.C.7.e, Test Manholes).

A bench shall be provided on each side of all manhole inverts. The bench shall be sloped to provide a minimum three (3) inch fall from the top of the bench to the crown (top inside) of the pipe or one-half (1/2) inch per foot, whichever is greater. No lateral sewer, service connection, or drop connection shall discharge onto the surface of the bench. The bench shall be constructed of aggregate-mix cement with smooth, veneer finish and troweled smooth from manhole wall to invert.

h) *Steps*

Manhole steps shall meet the latest revision of ASTM C478 and shall conform to the requirements of the Occupational Safety and Health Standards, U.S. Department of Labor. Steps shall be equal to M.A. Industries, Inc. Model (PS-1) or (PS-1 PF).

The uppermost step shall be cast into the side of the manhole no greater than eighteen (18) inches below the top of manhole cover. The steps shall be continued in alignment downward along the interior vertical side of the manhole to a point no lower than the crown of the largest sanitary sewer. Spacing of steps shall not exceed twelve (12) vertical inches. Steps shall not descend over any pipe connection into the manhole. Step dimensioning and spacing are presented in Standard Details S-001 and S-005, Appendix I.

i) *Frames and Covers*

Manhole frames and covers within paved areas shall meet the latest revision of ASTM A48, Class 30 or ASTM 536. Covers are to be solid with exception of pick hole(s) located at the cover's circumference, not protruding through the cover. Cast iron frames and covers must be matched for proper fit. The cast iron frame for the manhole cover shall be set at the required elevation and properly anchored to the precast manhole. Refer to Standard Details S-006 and S-008 in Appendix I for manhole frame and cover requirements in paved areas.

Where manholes are constructed in non-paved areas, the top surface of the frame and cover shall have bolt-down lids with a watertight gasket. Locked manhole covers may be desirable in isolated easement locations or where vandalism may be a problem. Manholes in wooded or un-maintained easement areas shall be a minimum of twenty-four (24) inches above ground level and a minimum of two (2) feet above the one hundred (100) year flood plain; whichever is greater. Manholes located within the one hundred (100) year flood plane shall contain manhole frames that are bolted to the eccentric cone in order to stabilize the manhole adjustment rings. In these cases, the manhole adjustment rings shall contain pre-drilled holes for the bolts from the pre-cast manufacturer. Manhole concrete rings shall be secured to each other, this is essential in flood plain areas where the slide and tilt of precast rings is likely to occur due to buoyancy. If the manhole top elevation is to be four (4) feet or higher above grade a flat top, eccentric, manhole shall be required to allow for safe and easy access. Height above grade for manholes on sloped ground in un-maintained areas shall be measured on the uphill side of the manhole. The cast iron frame shall be factory cast into the concrete cone. Manholes in maintained grass areas may be flush with the ground. Refer to Standard Details S-006 and S-007 in Appendix I for manhole frame and cover requirements in non-paved areas.

Top of cover shall be factory imprinted to read "Sewer".

The frames shall be properly set in place in a full bed of mortar and adjusted so as to make the top of the frame conform to the finished surfaces when located in streets, public highways and all paved areas. In other locations they shall conform to such elevations as are required.

All frames and covers are to be set so as to provide access to the manhole.

j) *Drop Connection*

Drop connections shall be utilized when the drop into the manhole is greater than two (2) feet; see Standard Detail S-002 in Appendix I. All inside drops greater than one (1) foot require one (1) joint (eighteen (18) feet minimum) of DIP adjacent to the manhole. For all outside drops at least one (1) joint (eighteen (18) feet minimum) of DIP shall be used on the incoming line to reach a solid, undisturbed foundation. See Section III.C.7.c for design considerations related to manhole drop connections.

The outside drop pipe shall be constructed of ductile iron materials.

All outside ninety (90) degree elbows shall have thrust block poured below the elbow.

k) *Doghouse Manholes*

Newly installed manholes on existing eight (8) and ten (10) inch lines shall be installed using a full base section, cored openings and transition couplings. See Section III.C.7.d for design considerations related to doghouse manholes.

Invert of the new line must be higher than springline of existing pipe if possible.

For doghouse manholes, the existing pipe shall not be cut without authorization of the DCDWM Inspector.

DCDWM Inspector must be present when existing pipe is cut for doghouse or inserted manholes.

l) *Receiving Manhole:*

The receiving manhole shall be coated with two coats of three (3) mills coal tar epoxy, three (3) mm of forty percent (40%) fiberglass and sixty percent (60%) resin spray liner or precast lined with three (3) mm of HDPE. Precast section joints/seams shall be wrapped with eight (8) inch joint wrap. Surface preparation, thickness, mixing and application shall be in accordance with the Manufacturer's instructions. Ventilation and odor control shall be installed and implemented.

11. Backfilling Trenches

Backfill in trenches where pipe has been laid shall be placed continuously by hand in layers not exceeding six (6) inches in thickness and carefully and thoroughly consolidated by tamping simultaneously on both sides of the pipe to a height of

twelve (12) inches above the top of the pipe. This backfilling and compacting must be done promptly and before any backfill material is deposited directly from a machine bucket, loaders, trucks, or other mechanical equipment. Once utilizing a machine bucket for backfilling, the bucket must be lowered into the trench to deposit the material in such a manner as to avoid the shock of falling earth which could injure or damage the pipe or structure. Under no circumstances should the material be allowed to fall from the machine or loader bucket directly onto the pipe or conduit in the trench. Follow Standard Detail S-018, Appendix I, for trench backfill procedure.

Except as otherwise ordered by DCDWM, all forms, bracing, and lumber shall be removed from the trench before backfilling.

Bottoms of trenches in earth must be shaped or molded and compacted to the contour of the outside of the pipe, using bedding materials, as directed, or where indicated on the approved design, to give full support to the lower segment of the pipe. This shall be done in such a manner as to prevent any subsequent settlement of the pipe. Boulders or loose rock which might bear against the pipe will not be permitted in the trench bottom, or in the backfill within the first two (2) feet above the top of the pipe. Bottoms of excavations which are of loose granular soils shall be compacted by vibratory compactor prior to laying of pipe to a minimum density of ninety-five percent (95%) of the maximum dry density as determined by the standard proctor test ASTM D698 (latest version).

Where foundation conditions are such that proper bedding cannot be provided, such as in quicksand, the Contractor may be directed by DCDWM to provide foundation cushion, concrete cradles, or other special provisions to provide support for the pipe.

Only after the backfill has been placed and hand-compacted to at least six (6) inches above the top of the pipe may the Work proceed in the placement of the remaining backfill material, which must be carefully placed and compacted. In streets, other surfaced areas, or where directed, the backfill shall be placed and compacted in lifts not to exceed twelve (12) inches in thickness. All precautions must be taken to avoid having any unincorporated material which may result in future settlement in these areas. Compaction shall be accomplished by approved mechanical tampers. The number of employees tamping shall at no time be less than the number of employees backfilling, and if necessary, additional employees shall be kept in the trench to spread the material.

Backfill material shall be compacted to a density of not less than ninety-five percent (95%) of the maximum dry density as determined by the standard proctor test ASTM D698 (latest version). When directed, the Contractor shall arrange to have such compaction tests conducted by an independent testing firm; the number and locations to be determined by DCDWM. Compaction tests shall be performed at the Contractor's expense.

Materials used for backfilling shall be free from all perishable organics or other objectionable materials, and shall contain no stones larger than six (6) inches in its longest dimension.

No clay backfill shall be used in pipe trenches under roadways or other paved areas. In such paved areas where clay is encountered, trenches shall be backfilled with No. 57 stone or crushed rock.

If, in the opinion of DCDWM, the original excavated material is unsuitable for use as backfill, such as perishable matter, refuse, building materials, wire, brush, stumps, ashes, large stones, muck, or other soft materials, the Contractor shall properly dispose of the objectionable materials, and shall furnish, haul, and place borrow material suitable for proper backfill.

Backfilling shall not be done in freezing weather, except by permission of DCDWM, and shall not be done using frozen materials or upon frozen materials.

All backfilling shall be left with smooth, even surfaces, properly graded, and shall be maintained in such condition until final completion and acceptance of the work, not withstanding applicable warranty periods. Where directed by DCDWM, the Contractor shall mound the backfill slightly above the adjacent ground to allow for settlement.

12. Restoration of Pavements, Sidewalk, and Curbs

Follow Standard Detail S-016, in Appendix I, for the repair of concrete and asphaltic concrete surfaces.

a) *Work Included*

The Contractor shall furnish all materials for, and properly restore all pavements, drives, sidewalks, and curbs, which may have been damaged, removed, or disturbed as a result of accomplishing the Work. Restoration and replacement shall be made to the satisfaction of DCDWM. This shall include in general, but without limitation, all necessary concrete, reinforcing steel, stone, cinders, gravel, slag, asphalt, or other bituminous material necessary for the proper completion and restoration of the Work as may be required, directed, or specified.

b) *Materials and Workmanship*

Materials to be used in the repair and restoration of pavements, drives, sidewalks, and curbs, shall be first quality. All materials removed while accomplishing the work shall be disposed by the Contractor on sites approved by DCDWM. No existing material may be reused in the Work unless pre-approved by DCDWM. All workmanship shall be first class. Concrete shall be Class B plain concrete with a twenty-eight (28) day compressive strength of three thousand (3,000) PSI, unless otherwise specified in the drawings or specifications.

c) *Restoring Pavements*

After the pipe has been laid, appurtenant work constructed, and backfill completed, the Contractor shall furnish, place, restore, and maintain all pavements or roadway surfaces which have been removed or damaged by or in pursuit of the Work. The form and degree of restoration shall be as specified on the approved design, as specified herein, and/or as directed by DCDWM.

For backfilling roadway cuts, only No. 57 stone or crushed rock backfill shall be used. See Section III.D.6 for trench bedding requirements and Section III.D.11 for trench backfill requirements.

All roadway restoration shall be done in accordance with the lawful requirements of the authorities within whose jurisdiction such pavement is located. All highway utilities and traffic controls are to be maintained and work shall conform to the rules and regulations of the authorities, including the use of standard signs. The Contractor shall furnish all such bonds or checks which may be required by the highway authorities to ensure proper restoration of paved areas.

When removal of pavement is required (other than gravel types) the Contractor shall outline the area to be removed by making saw-cuts. Saw-cuts shall be vertical to allow the removal of the paving material in straight lines. If pavement breakage occurs beyond the saw-cut, the Contractor shall make a new straight saw-cut beyond the furthest point of breakage.

The concrete base course shall extend the full width of the trench cut plus a minimum of twelve (12) inches on either side of the trench. The existing pavement shall be neatly sawed along both sides of the ditch. The concrete used shall be Class A or B Concrete. Once the concrete base course has properly set, the concrete surface shall be cleaned and a minimum of one (1) inch thick asphaltic concrete pavement shall be laid to match the level of the adjacent pavement, see Standard Detail S-016 in Appendix I for patch and resurfacing requirements.

At any time that an existing road is cut longitudinally for a distance greater than one hundred (100) feet, the concrete shall be poured flush with existing and the street shall be resurfaced curb to curb with one (1) inch minimum of asphaltic concrete. Existing road shall be restored to preconstruction condition.

The Contractor shall be responsible for maintaining all pavement cuts prior to project acceptance and during the one (1) year maintenance period. Should any failures be noted associated with any portion of the Work, the Contractor shall remove all such damaged surfaces and make full repairs; this includes adding and re-compacting approved backfill materials, placing and maintaining bituminous concrete pavement or stone road surfaces. All required pavement repairs necessitated due to pavement failure, either prior to final project acceptance or

during the one (1) year maintenance period, shall be completed by the Contractor within five (5) working days of notification by DCDWM. Bituminous concrete pavements or stone road surfaces, which the Contractor is required to replace, shall be in at least as good condition at the end of the one (1) year maintenance period as it was before construction.

d) *Roadway Permits*

The Contractor is responsible for obtaining all road opening permits from the DeKalb County Department of Public Works Transportation Division at (770)492-5222, including providing any required restoration bonds.

DCDWM shall obtain all road opening permits required by the GDOT. The Contractor is not permitted to make any type of cuts on roadways requiring a permit from the GDOT until such time as the permit is provided and prominently displayed on-site.

e) *Restoring Driveway Pavements*

The Contractor shall repair or replace all driveway sections disturbed by the process of the Work. Driveways shall be constructed of the same materials and to the same thickness of the adjoining wearing surface or to the minimums indicated on GDOT Standard Detail A1 in Appendix E, whichever is greater. In restoring driveways, the subsoil and foundation material shall be well-compacted so as to prevent any future settlement or cracking of the driveway pavement. In restoring concrete driveways, the base course shall be wetted prior to pouring new concrete. Where necessary to cut a concrete driveway, the cuts shall be made with a masonry saw, providing a smooth, straight line completely across the driveway. Partial cut-outs, crooked cuts, or cuts made by any other method other than masonry saw are not permitted. In general, or where directed, concrete slab removal shall be made in entire pavement sections to the nearest existing expansion-joint.

f) *Restoring Curbs*

The Contractor shall restore all curbs and combination curbs and gutters which have been removed or disturbed in the progress of the work. Curbing shall be made to conform accurately in size, line, grade, and materials as the adjoining section. In restoring curbs, the subsoil and foundation material shall be well compacted so as to prevent any future settlement of the concrete curbing. The sub-base shall be thoroughly rolled or tamped and shall be wet just before the concrete is placed, but shall show no pools of water.

g) *Restoring Sidewalks*

The Contractor shall restore all sidewalks which have been removed or disturbed in the progress of the work. Sidewalks shall be constructed to the same dimensions and materials as the adjoining sections.

Where necessary to cut a sidewalk, entire sections shall be removed and replaced unless otherwise directed by DCDWM.

The sub-base shall be thoroughly rolled or tamped and shall be wetted just before the concrete is placed, but shall show no pools of water.

h) *Contractor's Warranty of Restored Paved Surfaces*

The Contractor shall make every provision to ensure compaction by properly tamping any backfill under areas to be paved. Any settlement which may occur during the one-year warranty period shall be corrected by the Contractor at his expense, including removing, re-compacting, and replacing any paved surfaces which show signs of settlement, whether or not actual damage to the paved surface has occurred. This shall apply to all paved surfaces including streets, drives, sidewalks, and curbs and gutters.

Should settlement, cracks, or other indications of failure, or impending failure, appear in the paved surface, the adjoining paving shall be removed to the extent necessary to secure a firm, undisturbed bearing. All removal, re-compaction, and replacement shall be in accordance with the specifications concerning these operations as stated elsewhere.

13. Seeding / Sod Replacement

a) *Work Included*

The Developer/Contractor shall furnish all materials for, and properly restore to the satisfaction of DCDWM, all ground surfaces irrespective of type, which may be disturbed in the progress of the work. The Developer/Contractor shall refer to the AASHTO “Green Book” for erosion and sedimentation control for additional standards and requirements not listed in these Standards.

This shall include in general but without limitation, the spreading of topsoil, seeding, sod replacement, fertilizing, and mulching required to restore disturbed areas as may be necessary, directed, or specified herein. On all "sod" type lawns and other improved, well established grass areas, the sod/grass shall be carefully removed, kept alive, and replaced after the backfilling and grading is finished. The Contractor shall also remove all spoil from such areas as quickly as possible after the excavation is backfilled, and he shall leave the premises in as good condition as before undertaking the work. It is the intent of these Design Standards to restore all disturbed areas, to place seed and mulch in areas not specifically identified as improved lawns, to place topsoil and seed where improved lawns existed prior to construction, and to provide for "sod" removal and replacement in areas identified as such prior to construction. However, the DeKalb County Planning and Development Standard apply with respect to erosion and sediment control.

b) *Temporary Sedimentation and Erosion Control*

Limitation of Exposure of Erodible Earth: Contractor is to provide erosion and/or pollution control measures to prevent contamination of any river, stream, lake, tidal waters, reservoir, canal, or other water impoundments or to prevent detrimental effects on property outside the project right-of-way or damage to the project. Erosion and Sedimentation Control design shall be based on the "Manual for Erosion and Sediment Control in Georgia", Georgia soil and water conservation commission, latest edition (Green book), NPDES permit requirements, and approved by DeKalb County Watershed Protection Division.

Use temporary erosion control features to:

1. Correct conditions that develop during construction which were not foreseen at the time of design,
2. Control erosion prior to the time it is practical to construct permanent control features,
3. Provide immediate temporary control of erosion that develops during normal construction operation.

Schedule operations such that the area of unprotected erodible earth exposed at any one time is not larger than the minimum area necessary for efficient construction operations, and the duration of exposure of uncompleted construction to the elements is as short as practicable.

(a) Acceptable Erosion Control Measures:

1. Temporary Mulching:
   Furnish and apply a two (2) to four (4) inch thick blanket of straw or hay mulch to areas, as needed, then mix or force the mulch into the top two (2) inches of the soil in order to temporarily control erosion. When beginning permanent grassing operations, plow under temporary mulch materials in conjunction with preparation of the ground.

2. Artificial Coverings:

   a. Use artificial coverings composed of natural or synthetic fiber mats, plastic sheeting, or netting as protection against erosion during temporary pauses in construction caused by inclement weather or other circumstances. Remove the material when construction resumes.

   b. Use artificial coverings as erosion control blankets to facilitate plant growth while permanent grassing is being established. For the purpose described, use non-toxic, biodegradable, natural or synthetic woven fiber mats.

      Install erosion control blankets capable of sustaining a maximum design velocity of six and one-half (6.5) fps as

determined from tests performed by Utah State University, Texas Transportation Institute or an independent testing laboratory.

Install all sediment control devices in a timely manner to ensure the control of sediment and the protection of lakes, streams, gulf or ocean waters, or any wetlands associated therewith and to any adjacent property outside the right-of-way as required.

At sites where exposure to such sensitive areas is prevalent, complete the installation of any sediment control device prior to the commencement of any earthwork.

(b) Acceptable Sedimentation Control Measures:

6. Sandbags: Furnish and place sandbags in configurations to control erosion and siltation.
7. Berms: Construct temporary earth berms to divert the flow of water from an erodible surface.
8. Baled Hay or Straw: Provide bales having minimum dimensions of fourteen (14) by eighteen (18) by thirty-six (36) inches at the time of placement. Construct Baled Hay or Straw dams as needed to protect against downstream accumulations of sediment.
9. Temporary Silt Fences: Furnish, install, maintain, and remove temporary silt fences, in accordance with the Manufacturer's directions.
10. Rock Bags: Furnish and place rock bags to control erosion and siltation.

c) *Standard Specification for Seeding / Sod Replacement*

The requirements of the GDOT "Standard Specifications - Construction of Roads and Bridges", Current Edition, and as revised to date, shall apply insofar as they are applicable for all seeding/sod replacement.

d) *Topsoil*

Where directed by DCDWM, area to be seeded shall be covered with a layer of topsoil. The topsoil shall be of sufficient thickness that when spread and compacted, a minimum of four (4) inches will be available. The Contractor shall furnish natural topsoil of a good condition and tillable structure. Obtain topsoil as borrow from an outside source of uniform texture, drainage, and other characteristics so as to constitute a homogeneous soil meeting the requirements of GDOT, and as approved by DCDWM. The Contractor shall furnish topsoil that is free from objectionable materials such as hard clods, stiff clay, sods, hardpan,

partially disintegrated rock, large roots, or other materials that are not integrally a natural component of good agricultural soils, and which are harmful or not beneficial for successful plant growth. Do not use topsoil containing frost or in an excessively wet (muddy) condition. If utilizing existing material obtained from the initial excavation of the Work site for re-use as topsoil, the Contractor must first obtain approval from DCDWM as to suitability of its content, including approval of location and method of storage of topsoil for re-use.

e) *Seeding*

Seeding shall be accomplished by the Contractor using a properly proportioned mixture of inoculated seed approved for use in "Zone One" as detailed in the GDOT's Standard Specifications. Seeding shall only be permitted in the specified planting season for "Zone One" for the specified mixture. All seeded areas shall be uniformly mulched immediately after seeding.

The Contractor shall maintain all seeded areas to include mowing, watering, and re-seeding any bare areas until a satisfactory stand of grass has been obtained and final acceptance of the work has been received from DCDWM. Areas showing evidence of settlement or loss of topsoil shall be rebuilt and re-seeded as required.

In general, the Contractor shall replace existing maintained lawn areas with the same type of grass as was established prior to construction. Any deviations or alternatives proposed due to unavailability of seasonal grasses, or inappropriateness of seeding due to time of year must be presented to the DCDWM Inspector in writing with signed authorization of homeowner.

f) *Preparation of Seeded/Sod Areas*

The subgrade for any areas to be seeded shall be brought to a uniform grade by the Contractor and shall be free of stones larger than one (1) inch, roots, gravel, or other debris. Where topsoil is required by DCDWM, the topsoil shall be uniformly graded, trimmed, and raked free of unsuitable materials, ridges, bumps, or depressions. Over this area, the Contractor shall spread agricultural lime at the rate of one hundred (100) pounds per one thousand (1,000) square feet and shall spread a general fertilizer uniformly on the surface of the ground at a rate of thirty-five (35) pounds per one thousand (1,000) square feet. The lime and fertilizer shall be mixed uniformly into the top four (4) inches of the soil using suitable harrows, tillers, or other mechanical equipment.

g) *Sod Removal/Replacement*

On all well established and "sod" type lawns, the Contractor may at his discretion, utilizing suitable sod cutting equipment, cut the sod into rolls, carefully remove and store the sod , and water and maintain in a viable condition for replacement after backfill. Any such sod removed and replaced in this manner must be demonstrated to be living to the DCDWM Inspector prior to final acceptance of project.

If sod is to be replaced with "new" sod, the Contractor shall only replace using sod of the same type as that removed. Any deviations or alternatives proposed due to unavailability of seasonal grasses must be presented to DCDWM Inspector in writing with signed authorization of homeowner.

14. Maintenance of Traffic

The Contractor is responsible for obtaining all road opening permits from the DeKalb County Department of Public Works Transportation Division at (770) 492-5222, including providing any required restoration bonds.

When a sanitary sewer line is to be installed within the travelway of a DeKalb County or GDOT controlled road, a traffic control plan (TCP) will be required. The TCP, with the construction plans, shall be submitted to the reviewing agency for review and approval. The following roadway features shall be shown on the TCP:

- Pavement Width
- Pavement Type
- Speed Limit
- Traffic Lane Designation
- Pavement Markings
- Traffic Signs/Signals
- Sidestreets/Intersection Location

A TCP shall include the following:

- Legend
- Work Hour Restrictions
- Construction Sequence/Phasing
- Work Zone Designation
- Sign Placement
- Taper Length
- Traffic Movement Designation
- Drum/Cone/Barricade/Barrier Placement
- Flagging Requirement/Location
- Uniformed Police Officer Requirement/Location

The following agency shall be contacted when preparing a TCP:

- DeKalb County Department of Public Works Transportation Division (770) 492-5222

The following publications govern the design and installation of TCP's and devices:

Manual on Uniform Traffic Control Devices (latest edition)

GDOT Standard Specifications for Roads and Structures (latest edition)
GDOT Roadway Design Manual(latest edition)

DCDWM shall obtain all road opening permits required by the GDOT. The Contractor is not permitted to make any type cuts on roadways requiring a permit from the GDOT until such time as the permit is provided and prominently displayed on-site.

All highway utilities and traffic controls are to be maintained and work shall conform to the rules and regulations of the authorities, including the use of standard signs.

15. Bore and Jack

a) *General*

Working drawings shall show the size and location of bore and jack pits together with all sheeting and shoring to be used. In addition, such drawings shall include large-scale plan and profile of the proposed installation and affected structures if requested by DCDWM.

b) *Casing Pipe*

Casing pipe shall be new and unused pipe. The casing shall be made from steel plate having a minimum yield strength of thirty-five thousand (35,000) PSI. The steel plate shall also meet the chemical requirements of ASTM A36, latest edition. The outside of the casing pipe shall be coated with coal tar epoxy having a minimum dry film thickness of sixteen (16) mils. Surface preparation shall be SSPC-SP-10. Epoxy shall have a minimum solids content of sixty-five (65) percent by volume and shall be air or airless spray applied; minimum drying time shall be seven (7) days. Brushing shall be permitted in small areas only. All coating and recoating shall be done in strict accordance with the Manufacturer's recommendations. Epoxy shall be Tnemec, Carboline, or Valspar.

The thicknesses of casing shown below are minimum thicknesses. Actual thicknesses shall be determined by the casing installer, based on its evaluation of the required forces to be exerted on the casing when jacking. Any buckling of the casing due to jacking forces shall be repaired at no additional cost to DCDWM.

The diameters of casings listed below are the minimum to be used. Larger casings, with the DCDWM's approval, may be provided at no additional cost to the DCDWM, for whatever reasons the Contractor may decide, whether casing size availability, line and grade tolerances, soil conditions, etc. Casing and pipe support installation requirements are provided in Standard Detail S-023, Appendix I and Standard Detail W-024 in Appendix D.

c) *Casing Sizes*

Under railroads, the Contractor shall provide uncoated casings, unless otherwise required. The Contractor shall supply casing in accordance with the encroachment permits that are issued.

Minimum Casing Sizes Under Railroads or Highways			
Pipe Diameter (inches)	**Casing Diameter, (inches)**	**Wall Thickness, (inches)**	
		Coated	Uncoated
6	14	.250	0.282
8	18	.250	0.313
10	20	.281	0.344
12	22	.312	0.375
14	24	.344	0.407
16	30	.406	0.469
18	30	.406	0.469
20	32	.438	0.501
24	36	.469	0.532
30	42	.500	0.563
36	48	.625	0.688
42	54	.750	0.813

d) *Casing Spacers*

Casing spacers shall meet one of the following requirements:

Casing spacers shall be flanged, bolt-on style with a two-section stainless steel shell lined with a PVC liner, minimum 0.09-inch thick having a hardness of eighty-five (85) to ninety (90) durometer, minimum fourteen (14) gauge band and ten (10) gauge risers, with two (2) inch wide glass reinforced polyester insulating skids. Runners shall be attached to stainless steel risers which shall be properly welded to the shell. The height of the runners and risers shall be manufactured such that the pipe does not float within the casing. Casing spacers shall be as manufactured by Cascade Waterworks Manufacturing Company, Pipeline Seal and Insulator, Inc., or Advanced Products and Systems, Inc.

e) *Installation*

Where pipe is required to be installed under railroads, highways, streets or other facilities by bore and jack method, all operations of the Contractor shall be subordinate to the free and unobstructed use of highway and structures and shall not weaken the roadbed or structure; see Standard Detail S-023 in Appendix I.

The Contractor shall proceed with the work in such a manner as will permit regular transaction of business by the highway department and/or property owner without delay or danger to life or property. Contractor shall place necessary barricades, warning signs, signals, lights and, if necessary, watchmen for the protection of the public.

Jacks for forcing the casing pipe through the roadbed shall have a jacking head constructed in such a manner as to apply uniform pressure around the ring of the pipe. The pipe to be jacked shall be set on guides, braced together to properly support the section of the pipe and direct it to the proper line and grade. In general, roadbed material shall be excavated just ahead of the pipe.

Whenever possible, the pipe shall be jacked from the low or downstream end.

Excavated material will be placed near the top of the working pit and disposed of as required. Use of water or other fluids will be permitted only to the extent necessary for lubrication. Jetting will not be permitted.

The diameter of the excavation shall conform to the outside diameter and circumference of the casing pipe as closely as feasible. Any voids which develop during the installation operation shall be pressure grouted.

After the steel casing pipe has been installed, the carrier pipe shall be installed in the casing pipe. Care shall be exercised at all times to maintain tight, full seated joints in the carrier pipe. At each end of the casing pipe, the void between the carrier pipe and casing shall be sealed with casing end caps.

When requested by DCDWM, either grout shall be pumped between the carrier pipe and steel casing or sand shall be blown into the casing to fill all voids. Alternate methods must be submitted for approval.

All sheeting placed for the jacking/auguring must be completely removed by the Contractor.

All bore and jack designs shall include a manhole at or near each end of the jacked section.

When site conditions dictate, conventional tunneling techniques may be utilized as an alternate to bore and jack; see Standard Detail S-015 in Appendix I

16. Work within GDOT Right-of-Way

All roadway restoration shall be done in accordance with the lawful requirements of the authorities within whose jurisdiction such pavement is located. All highway utilities and traffic controls are to be maintained, and Work shall conform to the rules and regulations of the authorities, including the use of standard signs. The Contractor

shall furnish all such bonds or checks which may be required by the highway authorities to ensure proper restoration of paved areas.

E. Construction Oversight

1. General

When calling for an inspection, state whether it is preliminary, final, or other specific type of inspection. No approval of a project will be granted by DCDWM until all inspections are conducted, no defects noted, and all appropriate documents have been received and accepted. Letters of preliminary and final inspection/approvals will be sent to Developers and/or Contractors by the DCDWM and placed in Department files.

Jobsites shall be landscaped to an equal or satisfactory condition as presented prior to start of construction activities. Any damage to the existing system occurring during construction activities shall be promptly reported to the proper authorities so that proper action may be taken.

Any and all cleaning of a newly installed system prior to inspection/approval must be such as not to impair and/or damage an existing system.

2. Inspection Prior to Installation

Pipe shall be inspected and tested at the mill or warehouse by an independent testing laboratory to determine conformity with the requirements of ASTM Standards. Signed and dated certificates stating results of inspection and tests shall be filed with the DCDWM.

Prior to lowering pipe and specials into the trench, a field inspection may be conducted.

3. Final Inspection

a) *General*

Record drawings shall be submitted with elevations to mean sea level, manhole rim/invert elevations, manhole coordinates, service line cleanout coordinates, and stub lengths/locations shown.

A CCTV inspection of all newly constructed sanitary sewer lines and structures shall be conducted by the Owner/Developer. The video and report will be submitted to the DCDWM for approval, see Section III.F.3 for CCTV inspection requirements

F. Testing

1. Visual Test

The Contractor shall install the new gravity sanitary sewer system as watertight as practical. It is the Contractor's responsibility to eliminate all visible points of groundwater infiltration and any other significant points of leakage which can be located regardless of test results obtained as hereinafter required. Sanitary sewer lines completed in place shall be inspected and tested with a method satisfactory to the DCDWM showing a clear and unobstructed line between manholes. Lines and manholes shall be flushed and washed down before inspection and testing. The Contractor, at his own expense, shall perform system infiltration tests and air tests as described below.

2. Air Test

All sanitary sewers shall be tested by Contractor for leakage using low pressure air testing, according to latest revisions of ASTM C924 for RCP, ASTM F1417 for plastic pipe, and as specified herein. All pipe shall be backfilled prior to air testing. For pipes less than thirty-six (36) inches in diameter, the air test shall be performed by testing complete sections of pipe between manholes. For pipes thirty-six (36) inches in diameter and over, the air test may be performed by testing each joint connection individually using a joint tester similar to the Cherne Joint Tester.

The following procedure shall be used for air testing a sanitary sewer system: All pneumatic plugs shall be seal-tested before being used in the actual test installation. One length of pipe shall be laid in the ground and sealed at both ends with the pneumatic plugs. Air shall be introduced into the plugs until a pressure of twenty-five (25) psig is reached. The sealed pipe shall be pressurized until the internal air pressure reaches five (5) psig. The plugs shall hold against this pressure with bracing and with movement of the plugs out of the pipe. Plugs shall be readily removable to provide an unobstructed lateral house connection or extension. All wyes, and/or stubs shall be plugged in a manner acceptable to the Inspector.

Where high ground water is known to exist, the pounds of pressure that will be added to the internal air pressure used for the test shall be the height in feet of ground water above the invert of the sanitary sewer divided by two and thirty-one one-hundredths (2.31).

At least two (2) minutes will be allowed for air temperature in the test segment to stabilize, while internal air pressure remains no less than three and one-half (3.5) psig above ground water pressure.

The elapsed time for the internal pressure to drop to two and one-half (2.5) psig above ground water pressure will be accurately determined. If it is obvious to the inspector that no leakage is occurring, he may terminate the test early. The air test is deemed

acceptable if the elapsed time for the internal pressure drop equates to or exceeds three (3) hours.

If the installation fails to meet the requirements of this test, the Contractor shall determine the source of the leakage. The Contractor shall repair or replace all defective materials and/or workmanship. The installation will then be retested for compliance with these Design Standards.

3. CCTV Testing

A television inspection of the sanitary sewer shall be performed at the Owner/Developer's expense during final inspection. DCDWM shall be provided with one copy of the TV inspection report and CD-ROMs showing the entire length of the gravity sanitary sewer tested. A copy of the first page of the CCTV inspection form is provided in Appendix J. The report shall contain the condition of the pipe, name and location of the project including street name, manhole number, type of pipe, depth, location of services, length, type of joints, roundness, and distance between manholes. Any pipe found to be cracked, leaking, misaligned, bellied, or otherwise defective shall be removed and replaced. Record drawings certified and stamped by Owner/Developer's Engineer shall also be submitted to DCDWM. Owner/Developer shall give adequate notice to DCDWM so that an Inspector can be present during the CCTV testing.

Internal grouting to repair new lines will not be allowed, nor will a "re-rounding" process to repair excessive deflection be allowed.

Following corrections of discrepancies, the line will be re-inspected at no cost to DCDWM. All items must be approved and accepted by DCDWM prior to submittal of the final plat.

4. Inflow/Infiltration

Measure inflow and infiltration (I/I) into each major segment of sanitary sewer during wet weather, as requested by DCDWM. Use suitable temporary weirs and depth measuring devices, acceptable to DCDWM. These devices will be furnished, installed and removed by the Contractor.

For sanitary sewers sixteen (16) inches or less in diameter, no infiltration or leaks will be allowed. Any infiltration flowing at any section of the sanitary sewer project must be eliminated prior to final inspection and approval.

For sanitary sewers greater than sixteen (16) inches, take action necessary to permanently reduce infiltration from all water sources into all constructed work to the flow rate determined by tests witnessed by the DCDWM. Acceptable I/I shall not exceed 0.01 gallons per inch of nominal pipe diameter per foot of pipe per twenty-four (24) hours. **Repair methods must be approved by DCDWM.**

No visible or known leaks will be allowed regardless of infiltration test results.

5. Deflection Test (All PVC Sewers)

The Contractor shall test PVC gravity sanitary sewers for excessive deflection by passing a mandrel through the pipe. Deflection of the pipe shall not exceed five (5) percent.

The mandrel size shall be based upon the maximum possible inside diameter, taking into account the allowable manufacturing tolerances of the pipe. The mandrels shall have an odd number of legs, or vanes, with a quantity equal to or greater than nine (9). The legs of the mandrel shall be permanently attached to the mandrel. A mandrel with variable sizes shall not be allowed. The mandrel shall be constructed of steel, aluminum, or other material approved by the DCDWM and shall have sufficient rigidity so the legs will not deform when pulled through the pipe. The Contractor shall provide a proving ring for each size mandrel, with a tolerance of no more than 0.02 inch clearance. Before being used by the Contractor, the mandrel dimensions shall be checked by the DCDWM using the proving ring.

The Contractor shall excavate and install properly any section of pipe not passing this test and re-test until results are satisfactory.

This test shall be performed twice:

- Once within the first thirty (30) days of installation, and
- Once during final inspection, but no sooner than thirty (30) days after pavement backfill is done.

6. Manhole Testing

All manholes shall be vacuum tested. Manholes shall be tested in the presence of the DCDWM Inspector. The vacuum test shall consist of applying a vacuum to the manhole.

Each manhole shall be tested after the installation has been completed. If tested prior to backfill, the test shall conform to the latest revision of ASTM C1244. All pipes entering the manhole shall be plugged. Contractor shall take care to securely brace the plug from being drawn into the manhole. The test head shall be placed at the inside of the manhole cover frame and the seal inflated. Pump shut off shall occur once a vacuum of ten (10) inches of mercury is drawn. With the valves closed, the time shall be measured for the vacuum to drop to nine (9) inches of mercury. The manhole shall pass if the time is greater than or equal to the following:

- Sixty (60) seconds for forty-eight (48) inch diameter,
- Seventy-five (75) seconds for sixty (60) inch diameter,
- Ninety (90) seconds for seventy-two (72) inch diameter manholes.

For manholes deeper than twenty (20) feet, the test times shall increase by one (1) second per foot of additional manhole depth. If the manhole fails the initial test, necessary repairs shall be made. Retesting shall proceed until a satisfactory test is obtained.

If the test is performed after the manhole has been backfilled, the procedure shall be modified per NPCA guidelines.

G. Final Approval

1. General

The Final Plat will be signed by DCDWM after the following items have been submitted and accepted by the Department:

- Approval by DCDWM of installation, inspection(s) and testing(s).
- Submission of signed record drawings.
- Submittal of Construction Completion Form
- Submittal of one (1) electronic copy of the drawings on Compact Disc (CD), in MicroStation V8 and PDF format. Drawings shall contain elevations; where zero (0) foot represents the elevation at sea level. Relative depth/distance alone shall not be accepted. Specifically and not limited to, manhole rim/invert elevations, manhole coordinates, service line cleanout coordinates, and stub lengths and locations using the County's approved coordinate plane shall be provided in the drawings.

2. Construction Completion Form

Contractor/Developer is to send inspector acceptance reports to DCDWM, 1580 Roadhaven Drive, Stone Mountain, Georgia 30083. DCDWM shall send the "Construction Completion Form" once the as-built drawings are approved. Contractor/Developer must submit a completed "Construction Completion Form" to DCDWM prior to final plat approval. A copy of the form is provided in Appendix G.

3. Record Drawings

Record drawings (as-builts) must be submitted to DCDWM before a project can receive final approval, and/or Certificates of Occupancy. (NOTE: In order to avoid delays in the "approval process" of developments/subdivisions, as-built drawings should be submitted as soon as the sanitary sewer installation is complete to allow sufficient time for review).

Record drawings must be sharp, clear, clean, legible, and submitted on 24"x36" plain paper and the electronic MicroStation V8 files shall be submitted on CD.

Record drawings shall include a site plan and any supplemental or shop drawings as may be required by DCDWM.

One (1) complete set of record drawings and one (1) copy of the electronic files must be submitted by the Developer or Developer's Engineer to DCDWM for review and approval.

Record drawings must be stamped and signed by a Professional Engineer or Registered Land Surveyor licensed in the State of Georgia.

4. Guarantee of Work

The Contractor (and Developer in private developments) shall guarantee for a period of twelve (12) months from the date of final acceptance (from date of final plat approval or Certificate of Occupancy in private developments), all sanitary sewer lines and manholes, appurtenances, trenches, roadway and surface restorations, landscaping, and any other areas disturbed by the construction of the project, to be free from defects, and to be installed in compliance with all regulations, specifications, plans, directions, and construction practices which govern said installations.

The Contractor shall be responsible for repairs to any leaking pipe, fittings, etc. Should trenches settle during the warranty period, Contractor shall promptly furnish and place fill to the original grade and restore any damaged landscaping. Should any leaks or trench settlement occur under new pavement, the Contractor will be held responsible for the cost of all repairs, including pavement replacement.

The determination of the requirement for the Contractor to perform work under this guarantee shall be at the sole discretion of DCDWM.

IV. SANITARY SEWER PUMPING STATION AND FORCE MAIN STANDARDS

These Sanitary Sewer Pumping Station and Force Main Standards are to be used for pumping station with pumps with weights not exceeding one thousand (1,000) pounds (lbs) and for force mains not exceeding six (6) inches in nominal diameter. Pumping stations and force mains beyond these criteria do not fall within the guidelines of these Standards. The ROMTEC packaged pumping station design follows the requirements of these Standards, has been approved by DeKalb County, and may be specified by the Developer/Contractor.

A. Review and Approval Process

1. General

The DeKalb County Department of Planning and Development (DCDPD) is responsible for reviewing and approving proposed sanitary sewer pumping station projects in DeKalb County. The review by DCDPD is for general conformance to these Standards only. The Developer/Contractor shall have an experienced Professional Engineer registered in the State of Georgia design the pump station facility and associated force main. The Developer/Contractor and Design Engineer shall be fully responsible for the planning, design, construction, and initial start up and operation of the pump station facility, associated force main, and appurtenances. The Developer/Contractor and Design Engineer shall notify DCDPD in writing if any variation from these Standards is required for their project. The sanitary sewer pumping station and force main review process Flow Chart is presented in Appendix A. Partial approval and acceptance of the lift station shall not be entertained under any circumstance.

2. Allowable Use of Pump Station Facilities

Pump stations shall only be approved in DeKalb County where the installation of a gravity sanitary sewer system is not practical or feasible. Practical or feasible shall generally be interpreted to mean that wastewater can be conveyed by gravity flow to an existing sewer no more than 5,000 feet from the proposed development. This distance may be increased or decreased by DeKalb County Department of Watershed Management (DCDWM) based upon actual field conditions and the size of the development or project involved. Generally, the Developer/Contractor of a residential, commercial, industrial, or mixed-use development requiring sanitary collection shall have the responsibility to plan, design, permit, and construct the pump station (subject to DCDPD approval) and guarantee it for one year after transfer of ownership to DCDWM.

3. Pump Station Conceptual Review and Approval Process

Before designing a pump station facility, a conceptual report shall be submitted to DCDPD presenting the proposed project. The main purpose of the conceptual report is:

1. To make DCDPD and DCDWM aware of the proposed project.
2. To verify that a pump station is actually necessary or required.
3. To determine if allowance(s) for additional flow to the pump station from off-site source(s) are necessary.
4. To determine level of review necessary to demonstrate available capacity in receiving sanitary sewer.
5. To open the line of communication between the Developer/ Contractor and DCDPD. Active communication shall be maintained throughout the planning, design, permitting, and construction of the proposed project.

Allow at least two weeks, from the time of submittal, for DCDPD to review the conceptual report. All information to be submitted in the conceptual report shall meet the requirements of these Standards.

If DCDPD concurs that a wastewater pump station is necessary to serve the proposed development and the conceptual report is approved, the applicant will be authorized to prepare a pump station design for further review. Upon final review and approval, two sets of the submittal will be marked "APPROVED" and returned to the applicant.

4. Pump Station Design Review and Approval Process

After reviewing these Standards, the applicant will prepare a design submittal for DCDPD to review the detailed design elements of the proposed pump station. The submittal must include plans and calculations for the pump station and force main, electrical controls, programmable logic controller (PLC), generators, etc., including the standard details and specifications for the pumps selected. All information in the design submittal shall meet the requirements of Section IV.B and the design criteria set forth in Section IV.C of these Standards.

Allow at least two weeks, from the time of submittal, for DCDPD to review the design report. DCDPD will return the submittal to the applicant with comments to be addressed. After all comments have been addressed and approval has been given, two sets of the submittal will be stamped "APPROVED" and returned to the applicant.

If DCDPD approves the wastewater pump station design, the applicant will be authorized to obtain all applicable permits, including a construction permit and electrical permit, and may begin construction of the facility. Once a construction permit is obtained, a preconstruction conference must be held with a DCDWM representative, County Collection System Inspector, and the applicant before any work may begin.

5. Pump Station Acceptance by DCDWM Process

After the developer/applicant has completed the pump station construction, they shall contact (thru the DCDWM) the Polebridge Wastewater Treatment Facility in regards

to scheduling a start-up inspection. The developer/applicant shall work together with the DCDWM representative and the Collection System Inspector to successfully complete the inspection and start-up. In order for DCDWM to accept the pump station, the applicant must submit the information discussed in Section IV.B.3 and IV.B.4 of these Standards. Acceptance will be scheduled within three (3) business days. The following requirements shall be completed:

1. The applicant shall establish a street address for the pump station. All pump stations must have an address assigned to it prior to acceptance from DCDWM.
2. A visit to the pump station site will be scheduled with the applicant and the Polebridge Superintendent, Maintenance Supervisor, and the Senior Electronic Technician (or Instrumentation and Control Specialist), DCDWM and Collection System Inspector.
3. A facility inspection will be performed. Any work not meeting DCDWM approval at this inspection will be noted and referenced in writing as a punch list. Punch list items from the DCDWM representative shall be added to the final punch list maintained by the Collection System Inspector. A work completion date will also be stated on this punch list. Both parties will sign the punch list indicating agreement. The facility inspection shall demonstrate the following as a minimum:

    a That all units have been properly installed.
    b That the units operate without overheating or overloading any parts and without objectionable vibration.
    c That there are no mechanical defects in any of the parts.
    d That the pumps can deliver the specified pressure and flow.
    e That the pumps are capable of pumping the specified material.
    f That the pump controls perform satisfactorily.
    g Generator is of proper size and functions properly.
    h That all the instrumentation and controls are installed and function properly according to the specifications
    i That the communication between the instrumentation and controls and the central SCADA system is established and functioning properly according to the specifications.
    j That all cables, conduits, and wiring raceways meet the specifications.
    k That all the necessary documentation for the instrumentation and controls including but not limited to wiring and cable labels, and controller IO labels are provided and are according to the specifications.

4. The applicant shall deed title to land on which the pump station and all appurtenances (including the access road) to DCDWM. The applicant shall also deed ownership of the pump station facility, and all appurtenances to DCDWM. Proof of transfer of title will be required before start-up of the pump station will be initiated.

5. When all points of the punch list have been completed by the applicant to the satisfaction of the Collection System Inspectors and the DCDWM Representative, DCDWM will make formal acceptance of the pump station.
6. After utilities have been connected, the start-up of the pump station shall be conducted by the applicant and a representative of the pump manufacturer, and shall be witnessed by the Collection System Inspector and the DCDWM Representative.
7. If the proposed pump station facility is NOT accepted by DCDWM the applicant will not be able to obtain a Certificate of Occupancy for the proposed development.
8. The developer/applicant shall guarantee the entire pump station facility for a period of one (1) year from the date of acceptance (as established by DCDWM) and shall promptly remedy, repair, or correct any defect or omission in the work during this one-year period.
9. The developer/applicant shall have utilities (water, electricity, telephone, and gas, if applicable) installed in their name, and shall pay these utility bills for the period of ownership prior to acceptance by DCDWM.
10. After the one-year guarantee and maintenance period, inspection of the facility will be conducted by the developer/applicant, the Collection System Inspector and the DCDWM Representative. If there are no outstanding problems, the DeKalb County Water Pollution Control Branch Plant Engineer will have the utility billing transferred to DCDWM. The applicant will supply DCDWM with the account numbers for each utility.

6. Recommendations for Ordering Equipment and Utility Sources

Since manufactures' delivery times for pump stations, control panels, telemetry and peripheral accessories may vary widely; it is recommended that orders for this equipment be placed when pump station design approvals are received from DCDPD. This will help to avoid delays at the time of final plat submittal for the proposed development.

It is also recommended that application for utility (water, electricity, telephone, and gas, if applicable) service to the pump station be made as early as possible. Experience has shown that connection of utility service is often a major reason for delays in pump station completion.

B. Submittal Requirements

1. General

All submittals shall be made to:

DeKalb County Department of Planning and Development
330 West Ponce de Leon Avenue
Decatur, Georgia, 30030
(404)371-2518

DeKalb County Department of Watershed Management can be reached at the following address:

Technical Services:
DeKalb County Department of Watershed Management
1580 Roadhaven Drive
Stone Mountain, Georgia 30083
(770) 621-7200

A "Sanitary Sewer Pumping Station and Force Main Checklist" is provided in Appendix K. This checklist is used by DCDWM during design review and approval and is provided for information only.

2. Pump Station Conceptual Review and Approval Submittal

The conceptual review and approval submittal shall be presented in report format with maps and development plans to an appropriate scale. The following items shall be included in the report:

1. Completed Conceptual Review and Approval Form (see Appendix L).
2. Proposed site located on a USGS Quadrangle map, with the proposed pump station location shown. The map shall show the limits of the proposed development and of the sub-basin that drains to the pump station.
3. Location of proposed connection to receiving sanitary sewer.
4. Calculation for wastewater flows generated by the proposed development.
5. Calculation for wastewater flows generated in the remainder of the sub-basin.

3. Pumping Station Design Review and Approval Submittal

The design review and approval submittal shall be presented in plan format with maps and development plans to an appropriate scale. Four (4) sets of 24"x36" design plans and one (1) electronic copy on compact disc (CD) (in MicroStation V8 and PDF formats) of design plans shall be submitted. MicroStation electronic files shall follow the format and requirements presented in Appendix C: Digital File and CADD Requirements.

The plan set shall include a legend depicting symbols used in the drawings, general notes pertinent to DCDWM requirements, and DCDWM standard details used within the plan set. A text box that denotes the flow rate from the selected pump (i.e. 366 GPM), the size and cross sectional area of the discharge piping in the wet well (i.e. four (4) inch pipe, 0.087 ft^2), and the resulting velocity within the discharge piping (i.e. 9.37 fps) shall be included on the pump station detail sheet. Also, a fitting schedule that contains pipe size and material, fitting sizes, and valve size and type, and other appurtenances (e.g. flow meter, pressure gauge, etc) shall be listed on the

pumping station detail sheet. Pump station standard details are provided in Appendix M.

The following items shall be included in the design submittal and shall be stamped by a Professional Engineer registered in the State of Georgia:

1. Completed Design Review and Approval Form (see Appendix L).
1. Location map depicting property and land lot lines, buildings, and roads.
2. Pump curve and system head curve.
3. Pump details, specifications, and shop drawings, including wet well elevations.
4. Valve details, specifications, and shop drawings.
5. Flow meter details, specifications, and shop drawings.
6. Generator details, specifications, and shop drawings, along with automatic transfer switch specifications and shop drawings.
7. Telemetry equipment details, specifications, and shop drawings.
8. Single line electrical drawing showing power distribution for the proposed pump station.
9. Force main design showing size, material, plan, profile, and valve locations.
10. Depiction of receiving gravity sanitary sewer system and connection to proposed pump station force main.
11. Completed Pump Station Design Calculations Form (see Appendix L).
12. Conduit and raceway specifications. See Electrical Conduit Specifications in Appendix K.

4. Pump Station Acceptance by DCDWM Submittal

The pump station start-up check list is provided in Appendix L. At the start-up inspection, the applicant shall provide the following materials to DCDWM:

1. As-built drawings of the pump station facility.
2. Manufacturer's warranties.
3. A certified pump test curve from the manufacturer must be provided on all pumps prior to acceptance.
4. Proof of transfer of title of deed and transfer of ownership to land on which the pump station and all appurtenances, including the access road, are dedicated to DCDWM. The applicant shall also deed ownership of the pump station facility itself, and all appurtenances, to DCDWM.

An example Pump Station Design Review and Approval Form is provided in Appendix N. Items one (1) and two (2) must be provided in paper copy and electronic format on a CD-ROM. All electronic files shall be in Adobe® (*.pdf) and Microstation V8 (*.dgn) format. The electronic data shall be presented in the following file structure:

Pump Station Submittal File Structure

Folder	Information
Data Sheet	Completed Project Data Forms
Engineering Design	Engineering Design Reports
As-built Drawings	As-built drawings of pump station, .pdf format
As-built Drawings	As-built drawings of pump station, .dgn format
Pump Submittal	All manufacturer's submittals, reports, and tests of pumps
Shop Drawings	All other equipment shop drawings
O&M Manuals	Operation and Maintenance manuals for all equipment
Warranty Forms	Copies of all warranties
Deeds and Easements	Copies of all deeds and easements

5. Force Main Information to be Shown

Information within this section shall be provided for force main designs or pumping station projects that include a force main design component that extends beyond the pump station pad.

A title block presented on each sheet shall include the name of the development; phase or unit of development (if applicable); Land Lot and District; name, address and phone number of Developer and Developer's design engineer; and Professional seal of Developer's design engineer with signature.

A cover sheet shall be included with a drawing index. The cover sheet shall also include an approval block for DCDWM signature. Cover sheet shall include a location map with north arrow.

a) *Plan View*

Plan view shall have a scale of not more than fifty (50) feet to the inch [1" = 50']. Show all location, size and material of construction for all proposed pipelines within the project area. The proposed force mains shall be shown on the plans as solid lines with size, material, use, and pipe class called out; for example "8-inch DIP (FM)-Epoxy Lined, Class 350". Plans shall show the location of all force mains and gravity sanitary sewers. Plans shall also show any lift stations adjoining the force main system. Gravity Sanitary Sewer Standards are located in Section III of these Standards. All proposed and existing easements shall be shown.

Plans shall show all other buried existing or proposed utilities, including storm and gravity sanitary sewers, drywells, potable water mains, buried telephone,

natural gas, power, and cable TV lines, within the project area that are concurrent with proposed gravity sanitary sewer construction. Existing utilities should be shown to the extent known, given records available to the Developer's design engineer. Existing utilities shall be shown as dashed lines. Construction details should note that all buried utilities are to be field located prior to construction.

Plans shall show the tie-in point(s) of the proposed force main system to the DCDWM existing system. Plans shall include typical construction details of all tie-ins to existing pipelines and structures; typical trench cross-sections including bedding, backfill, and compaction requirements; manhole; and service connection details.

The project benchmarks shall also be shown and referenced to state plane coordinates.

b) *Profile View*

Profiles shall show each force main, manhole, sanitary sewer line, lift station, utility crossings etc. as referenced on the plan view. Profile shall list pipe utility use and material, size of pipe and bedding materials. Profiles shall have a vertical scale of not more than ten (10) feet to the inch.

C. Design Criteria

1. Pump Station Service Area Map

The potential service area of the pump station shall be clearly delineated on an area map. The service area will include the area that can reasonably flow by gravity to the pump station site based upon topography. The service area map must also identify any areas being served by existing sewer facilities.

If the sanitary sewer drainage basin is larger than the proposed pump station service area, DCDWM reserves the right to require larger pumps, wet well, storage facilities, and gravity sewers. These will be considered on a case by case basis.

2. Design within GDOT ROW

If any portion of a proposed project enters a State of Georgia controlled right-of-way, then a GDOT permit application is required. Developer or Owner shall submit to DCDWM the required material in hard copy and in electronic form, on a CD. Hard copy forms, permits, and drawings, etc. must be 8 ½" X 11", drawings need not be to scale. All measurements necessary for the permit application must be submitted in English. Generally, portions of the project design can be reduced in size and matchlined, if necessary, as long as the text is still legible. Compaction notes indicating compaction requirements must be included on every construction drawing required for the application (see Section IV.D.2.*l* for backfill requirements). Submittal shall include four (4) each of the following: plan, profile, traffic control

plan, and section from GDOT county map. The GDOT Permitting Checklist is provided in Appendix E.

GDOT requires the GDOT permit application to be submitted through the Georgia Utilities Permitting System (GUPS). The Developer or Owner is not to submit the GDOT permit directly through the GUPS. The Developer or Owner is to provide all necessary information, as stated in the previous paragraph, DCDWM shall review the information and provide comments (if necessary). Once the necessary information has been approved, DCDWM shall submit the GDOT permit application through the GUPS.

Developer/Contractor shall refer to the GDOT Utility Accommodation Policy and Standards Manual, most current edition, for policies regarding construction of utilities within the public highway right-of-way.

Traffic control shall be in accordance with the Manual on Uniform Traffic Control Devices (MUTCD), latest edition.

Trench restoration within GDOT right-of-way shall be in accordance with GDOT Standard Detail 1401 Pavement Patching Details.

All bore and jack pits must be a minimum of ten (10) feet from outside edge of pavement. Plans shall show casing size and carrier pipe size within the approach slab for bridge crossings.

All documents necessary for said application must be provided by the developer's engineer.

3. Calculation of Sanitary Flows

All flow calculations shall be presented in the Pump Station Design Calculations Form, Appendix L. Follow the submittal process described in Section IV.B, of these Standards.

Determination of design sanitary flows shall be based on wastewater flows expected to become tributary to the pump station for the entire development at build-out. The sanitary flows will be identified as on-site sanitary flows and off-site sanitary flows. On-site sanitary flows are those flows that will be generated directly from the project site. All other flows shall be identified as off-site sanitary flows, and shall be based on wastewater flows expected to become tributary from the entire drainage basin over the life of the pump station. In addition, sanitary flows that will be realized immediately shall be identified as “initial flows” and the remaining flows shall be identified as “future flows.”

a) *Delineation of Drainage Basin*

The drainage basin surrounding the proposed site shall be delineated with the location of the pump station as the most downstream point. If the entire drainage basin is within the proposed site, the ADF is calculated by applying the flow generation factors from the above table. If there is additional offsite area within the drainage basin that is upstream of the proposed development, that area needs to be accounted for when calculating the ADF. DCDWM will determine during the conceptual review and approval process whether a proposed pump station will need to service off-site flows.

b) *Average Daily Flow*

The Average Daily Flow (ADF) that a site will generate is calculated based on the use of the site. The table below shows sanitary flow generation factors, in gallons per day (gpd), which can be used to estimate sanitary flows from proposed and existing developments.

Sanitary Flow Contributions from Site Specific Sources

Contributor	Sanitary Flow, gpd
Airports, Railroads, Bus Terminals	5/Passenger + 10/Employee
Stadiums, Racetracks, Assembly Halls	5/Seat
Bar/Lounge	30/Seat
Barber Shop/Beauty Salon	125/Chair + 20/Employee
Bath House for Swimming Pool	10/Swimmer
Boarding Houses	75/Resident
Bowling Alley	75/Lane + 20/Employee
Car Wash (non recycling)	75/Car
Church	5/Sanctuary Seat
Campgrounds without Sewer Connections	100/Space
Campgrounds with Sewer Connections	150/Space
Country Club	25/Member
Day Camp	20/Person
Day Care Center	15/Person
Dental Office	20/Employee + 100/Chair
Fitness Center/Spa	50/Person
Food Service – Restaurants Open 24 Hours/day	75/Seat + 20/Employee
Food Service – Restaurants Open Less than 24 hour/day	50/Seat + 20/Employee
Food Service – Catering	50/100-ft^2 Floor Space
Funeral Home	300/Embalming + 100/Employee
Grocery Store	200/1000-ft^2 Floor Space
Hospital	300/Bed + 100/Resident Staff
Hotel/Motel	100/Room
Laundry	500/Machine
Medical Offices	200/Exam Room
Nursing Home	150/Bed + 100/Resident Staff
Prison	125/Bed + 20/Employee
Resident Camps	60/Person
Residential Homes	150/Bedroom
Retail Stores	Larger of 400/Restroom or 100/Fixture
Schools – Day, Toilets Only	12/Person
Schools – Day, Toilets, Cafeteria	16/Person
Schools – Day, Toilets, Cafeteria, Gym	20/Person
Service Station	20/Person
Shopping Center/Mall	100/1000-ft^2 Enclosure Space
Theaters	5/Seat
Veterinary Office	100/Run + 10/Cage + 20/Employee

Note: Flow Estimating Factors based upon Georgia Environmental Protection Division *Large Community Design Guidance, Appendix A* (March 2005)

c) *Offsite Areas*

If it is determined by DCDPD that offsite flows need to be accounted for in the design of the pump station, the following process shall be followed.

If the offsite area is already developed, an analysis of the existing sites using the flow contributions in the above table will result in additional ADF that must be accounted for.

If the offsite area is not developed, the future land use must be analyzed to determine the development potential of the area. A future land use map is available from the DCDWM and is titled *DeKalb County, Georgia Comprehensive Plan.* The future ADF from these areas can be determined by applying the estimating factors listed in the table below.

Sanitary Flow Contributions Based on Land Use

Future Land Use	Sanitary Flow, gpd per acre
Low Density Residential (0-4 dwelling units per acre)	675
Low-Medium Density Residential (0-8 dwelling units per acre)	1,170
Medium Density Residential (0-12 dwelling units per acre)	1,755
Medium-High Density Residential (0-18 dwelling units per acre)	2,025
High Density Residential (0-30 dwelling units per acre)	3,375
Commercial Low Density	390
Commercial High Density	1,000
Office / Professional	390
Industrial	1,000
Institutional	575
Agriculture	25
Transportation, Communication, Utilities	1,000

Note: Flow Estimating Factors based upon literature research and historical flow data in DeKalb County as analyzed in the *Phase I & II Sanitary Sewer Capacity* for DeKalb County (2004)

If the sum of the average daily flow generated onsite and the offsite area's calculated flow results in pump selection outside the limits of these pumping station and force main standards, coordinate design efforts with DCDWM staff.

d) *Peaking Factor*

Once the total ADF has been determined, the flow must be multiplied by a Peaking Factor (PF) to determine the peak flow that will be realized in the pump station. The peaking factor formula to be used is:

$$PF = \frac{18 + \sqrt{Q}}{4 + \sqrt{Q}}$$

Where Q is the ADF in units of one hundred thousand (100,000) gpd.

Multiply the Peaking Factor and the ADF to get the design flow for the pump station. The above equation yields a peaking factor that is intended to cover normal infiltration and inflow for well-maintained sewer systems and/or those built with modern materials and construction techniques.

4. Determination of Receiving Sewer Capacity

Before a pump station can be considered, it must be determined that the receiving sanitary sewer is not already capacity limited. If the receiving sewer is already capacity limited, this can cause surcharging and create the potential for wastewater overflows.

During the pump station conceptual review and approval process, DCDPD will determine the level of analysis that must be performed to determine if a proposed pump station will cause capacity problems.

5. Calculation of System Head Curve

The total dynamic head (TDH) is the head against which the pump must work. The TDH is made up of static headloss and friction headloss. When TDH is plotted verses discharge, the resulting line is the System Head Curve.

a) *Static Headloss*

The static headloss is the distance that the wastewater flows must be moved vertically, from the water surface elevation in the wet well to the receiving gravity sewer invert. System head curves must be developed for the following two static head conditions:

1. Pump-off elevation
2. Lead pump-on elevation

b) *Friction Headloss*

The friction headloss is the head of water that must be supplied by the pump to overcome the frictional losses in the pipe. It is a function of pipe length, diameter, flow rate, and the friction coefficient (C factor).

The design shall use the Hazen-Williams formula to calculate the Friction Headloss:

$$h_f = L\left(\frac{10.44Q^{1.852}}{C^{1.852}D^{4.8655}}\right)$$

Where:
h_f is the friction headloss, in feet
L is the force main pipe length, in feet
Q is the flow rate, in gallons per minute
C is the friction coefficient, dimensionless
D is the force main pipe diameter, in inches

Because the friction coefficient of the force main will change over time, system head curves shall be generated and evaluated for present and future conditions. The C factors indicated below shall be the only values allowed for these calculations. Friction headloss must be analyzed for the following conditions:

1. The initial operating condition (C=130)
2. The system after it has aged (C=100)

This ensures that when selecting a pump, the operating range will be efficient throughout the lifetime of the pumping system.

c) *System Head Curve*

Add both static headloss conditions to each of the friction headloss conditions to arrive at four separate System Head Curves. The pump selected shall be able to operate well under all four pressure conditions. The below figure illustrates example system and pump curves:

Example System and Pump Curves

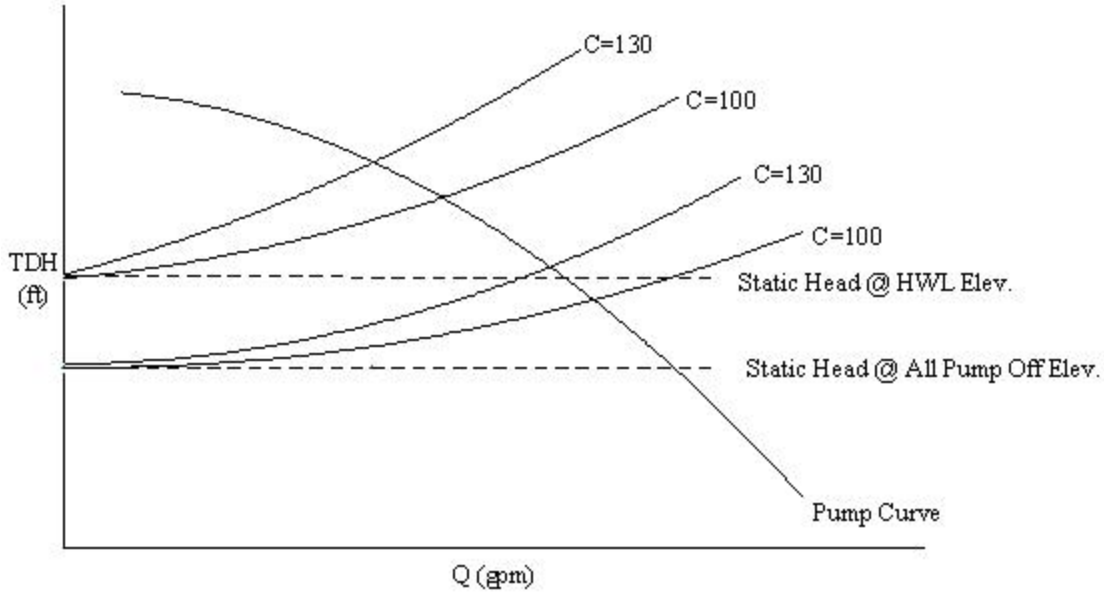

The System Head Curves can now be plotted using the force main discharge (Q) on the x-axis and the corresponding TDH values for each static head and friction headloss condition on the y-axis. These curves define the energy required to pump sanitary flows through the discharge system. The System Head Curve represents the conditions under which the pump must operate at various inflows and TDH combinations for a specific set of pipe size, pipe material, and pipe length combinations. Once the system head curve is developed, a suitable pump can be chosen. When overlaid with pump performance curves provided by the manufacturer, it will yield the pump operating ranges.

6. Pump Selection Process

Pump selection shall be based on a hydraulic analysis of the system through which the wastewater is to be conveyed. The design operating range is defined as the intersection of the pump curve and the calculated system curves for the various conditions. Pumps shall be selected such that the pumps shall be capable of pumping the required capacity for all total dynamic head requirements developed by the system for the lifetime of the pump station. The design operating range of the pumps shall be within ten percent (10%) (on a flow basis) of the Best Operating Point of the pump, as determined by the manufacturer and identified on the pump curve. Pumps shall produce a velocity in the discharge piping between three (3) and seven (7) feet per second.

DCDWM will only permit new pump stations that utilize submersible constant speed pump configurations. Variable speed pumps shall only be allowed on a case-by-case basis as decided by DCDWM.

The pump selected shall be capable of pumping the peak design flow with the largest pump out of service. All pumps shall be non-clogging units capable of passing three (3) inch spherical objects.

Reliable operation and extended equipment life can best be achieved for submersible pump stations when pumps are carefully selected, based on their most common operational point.

Pumps shall be selected such that all design operating points are on the pump curve as supplied by the pump manufacturer. In addition, pumps shall be selected such that the net positive suction head available ($NPSH_A$) shall be greater than the net positive suction head required for the pump ($NPSH_R$) at each of the design operating points. To the greatest extent possible, pumps shall operate at or near their highest efficiency point throughout their anticipated service life, taking into account increases in head requirements (due to increased friction losses) over time.

Pumps shall be selected such that the pumps will not cavitate at any point within the design operating range. Pumps that operate within the unstable portion of the pump curve under any of the expected design conditions shall not be allowed. Freewheeling (i.e., operating at pump run-out) or deadheading (i.e., operating at pump shut-off) of pumps shall not be allowed.

The impeller chosen shall be the smallest available, so that there is flexibility for future pumping needs. Impellers shall be ITT FLYGT N-type impeller.

The motor horsepower chosen shall be adequate so that the pump is non-overloading throughout the entire pump performance curve from shut-off through run-out.

Material certification specifying the hardness of wearable parts shall be provided by the pump manufacturer. Pumps shall be constructed in an ISO 9001 approved facility.

7. Wet Well Design

a) *Wet Well Geometry*

The following equation shall be used to determine the active storage volume in the wet well (the volume between the pump-on and pump-off elevations) required to generate the required pump cycle time:

$$V = T\left(\frac{Q_{PUMP}}{4}\right)$$

Where V is the active volume within the wet well, in gallons
T is the allowable pump cycle time between starts, in minutes
Q_{PUMP} is the pumping rate of a single pump, in gpm

The geometry of the wet well shall be shaped such that the only flat surfaces occur directly under the pump inlets. The wet well floor shall have a minimum slope of 1:1 to the hopper bottom. The horizontal area of the hopper bottom shall be no greater than necessary for proper installation and function of the pump inlet. The walls shall be cylindrical, with a six (6) foot minimum diameter. The entry hatch shall be large enough to remove the pumps for servicing. No fixed ladders shall be permitted in the wet well. The wet well shall have a minimum depth of eight (8) feet.

b) *Clearances*

Pump-to-pump and pump-to-sidewall clearances shall be the minimum possible to minimize the potential for sedimentation problems, while also being within the manufacturer's recommendation.

Unless specifically prevented by site conditions, the top of the wet well shall be at least two feet below the lowest building floor elevation receiving sewer service. This will provide a point of relief to prevent wastewater backups into homes.

c) *Influent Sewer Lines*

The influent sewer line shall be introduced into the wet well at as flat a slope as possible. Bringing the influent line into the wet well at a steep slope can cause air entrainment into the pump. The required sanitary storage volume must be provided entirely within the wet well. Only one inlet connection shall be permitted to a wet well. Any additional influent lines shall be combined into a manhole upstream of the wet well.

d) *Sump Design*

The sump design is an integral part of the pump station. Proper pump performance depends on correct sump design, which will also reduce cost of operation and maintenance. Ideally, the flow of water into any pump shall be uniform, steady, without swirl, and without entrained air. Unsteady flow will lead to mechanical problems in the pump and air entrainment will lead to cavitation in the pump. All sumps shall be designed in accordance with the manufacturer's recommendations.

e) *Buoyancy Protection*

Below-ground pump station structures shall be protected from the buoyant forces of groundwater.

Buoyancy protection for wet wells greater than ten (10) feet shall be demonstrated through the use of flotation calculations.

1. A geotechnical analysis shall be performed to gather groundwater and soil data.

2. Flotation calculations shall be performed on below-ground pump station structures using groundwater table elevation determined from the geotechnical analysis.
3. Buoyancy forces shall be computed by multiplying the volume displaced by the wet well by the associated weight in water.
4. Opposing force shall be computed by adding the weights of the wet well barrel, bottom slab, top slab, the net weight of the saturated soil over the bottom slab, and any additional restrains.
5. Flotation calculations shall not add the weight of the pumps, internal piping and appurtenances, or wastewater present in the pump station, including the wastewater below the all pumps-off activation level, into the downward forces used to counteract buoyancy.
6. The use of the saturated weight of any soil above the extended footing of the pump station structure to the groundwater table elevation shall be allowed in the flotation calculations.

Flotation calculations shall show that the design of the below-ground pump station structures will be protected from buoyancy with a factor of safety that is equal to or greater than one. The factor of safety is obtained by dividing the opposing force by the buoyant force.

An anti-flotation collar at the base of the pump station can be used to offset the buoyancy force.

f) *Pump Cycle Time*

Pumps shall be cycled such that the numbers of starts are minimized and resting times are maximized to avoid overheating and overstressing of the pump motor. The minimum time between pump starts shall be ten (10) minutes. The minimum cycle time occurs in a two (2) pump system when the inflow is at half the peak flow. Automatic pump alternation of the starting order of the pumps after shutoff is required and will provide longer cycle times and rest times.

g) *Pump Control Elevations*

Within the wet well, there shall be set elevations for the following conditions:

1. High Level Alarm
2. Lag Pump On
3. Lead Pump On
4. Pumps Off
5. Low Level Alarm

The lead pump is energized when the wastewater level reaches the lead pump-on elevation. The lead pump shall operate continuously until the water level is lowered to the pumps off elevation. The lag pump shall be energized if the lead

pump is incapable of handling the flow of wastewater, allowing the water level to reach the lag pump-on elevation. The lag pump shall then operate in unison with the lead pump until the water level is lowered to the pumps-off elevation. At this time, both pumps are de-energized. An automatic circuit will alternate the lead pump and lag pump sequence on every pump down cycle. A time delay relay shall be provide to prevent both lead and lag pumps from starting at the same time.

Storage shall be provided above the high-level alarm equal to three (3) hours at design flow. Storage volume is calculated to be that volume between the high-level alarm and the lowest point of overflow, and includes volume in the wet well and gravity sewer. The location of the lowest point of overflow shall be noted in the Design Review and Approval Submittal.

The high water alarm elevation shall be set to provide one foot of freeboard below the influent pipe.

The lag pump-on elevation shall be set at a minimum of six (6) inches below the high water alarm elevation.

The lead pump-on elevation shall be set at the elevations that satisfy the individual pump cycling volumes. The wet well active volume is obtained using the equation provided in Section IV.C.7.a.

The pumps-off elevation shall be no lower than the pump discharge flange elevation.

The low level alarm elevation shall be set six (6) inches below the pumps off elevation.

h) *Water-Level Sensors*

The water-level sensors activate the pumps and, therefore, are a vital component of the control system. DCDWM will allow only electronic sensors. The signals from these sensors are inputted to a PLC which will control the starting and stopping of the pump motors.

i) *Ventilation and Odor Control*

Smaller flows into the wet well during the warmer months of April through September increase the wastewater retention time, and increased odors are typically generated. Pump stations located within forty (40) feet of a residence shall be equipped with an odor control device. The odor reduction system will be utilized to remove volatile malodorous components characteristic of municipal sewage off-gases. Odor control measures shall follow guidelines set in Section IV.D.5.b)(6).

Most small pumping stations do not have continuously powered air intake and exhaust on wet wells. Consequently, the wet wells are hazardous areas and stringently classified under the National Fire Protection Association (NFPA), the Occupational Safety and Health Administration (OSHA), and the National Electric Code (NEC). In general, the designer shall eliminate any need to enter the wet well on a routine basis. Guidelines related to wet well ventilation and the related subject of odor control include the following:

1. To reduce odor problems caused by gas release, the fall of wastewater from the inlet sewer to the wet well water level shall be minimized to the extent practicable.
2. The wet well shall be vented to the atmosphere. The four (4) inch vent shall extend through the concrete slab at the top of the wet well and shall be either elbowed down or covered, as shown in Standards Detail P-014, Appendix M, to prevent debris from entering the wet well. The vent shall include a suitable insect screen.
3. Because of poor ventilation and the presence of dangerous gases, wet wells are generally classified as Class I, Group D, Division 1 areas under the NEC. Explosion proof submersible pumps and measuring devices shall be the only equipment inside the wet well. Electrical connections in the wet well shall also be explosion proof.
4. Wet wells are generally rated as Class A confined spaces according to OSHA regulations. This classification requires special safety procedures for entry.

Pumping stations receiving industrial wastewater shall submit a water quality report to DCDWM. If it is determined that odor control is required, the receiving pumping station shall be equipped with odor control measures, such as activated carbon. Odor control requirement will be based on peak flow and detention time.

8. Overflow Vault Design

a) *Size*

An overflow vault shall be required when the wet well structure does not have the capacity to hold a volume greater than or equal to three (3) times the peak hourly flow for design of the pump station.

Overflow vault shall be sized to contain a volume greater than or equal to three (3) hour storage volume during at peak flow. At a minimum the overflow vault shall hold thirty-two thousand (32,000) gallons. Backflow of sewage into manholes upstream of the wet well is not permitted.

Example Overflow Vault Volume Calculation:

Peak Hourly Flow (Inflow to Pumping Station)	=	200 gallons per minute (gpm)
		= 12,000 gallons per hour (gph)
Storage Volume Criteria (Time)	=	3 hours
Volume of Overflow Vault	=	12,000 gph * 3 hours
Volume of Overflow Vault	**=**	**36,000 gallons**

b) Buoyancy Protection

Below-ground pump station structures shall be protected from the buoyant forces of groundwater. Follow Section IV.C.7.e for buoyancy protection requirements.

9. Valve and Meter Vault Design

All wastewater pump stations shall have a combined below grade valve and meter vault, separate from but immediately adjacent to the wet well. Guidelines for proper design of the valve and meter vault include the following:

1. The discharge piping from each pump shall be routed through the valve and meter vault with check valves and shutoff valves on horizontal stretches of pipe, to prevent solids from settling back on the check valve. Check valves shall be placed upstream of shutoff valves. A flow meter shall be installed downstream of the valves in the valve and meter vault. The length of force main between the meter and the valves shall be straight, in accordance with the manufacturer's recommendations, with no bends or fittings in the line, to reduce turbulence of the wastewater entering the flow meter.
2. Pressure gauges shall be installed within the valve and meter vault. The pressure gauge tap with diaphragm mounted seals shall be located on the side of each pipe in the valve and meter vault, see Standard Detail P-014 in Appendix M for placement. Gauge gradation shall not be more than one hundred and twenty percent (120%) of the maximum pressure anticipated at the pump station. Pressure gauge face shall be four (4) inches minimum and installed facing up toward to the access hatch; the pressure gauge shall be easily read by looking down into the valve and meter vault.
3. The valve and meter vault shall have a concrete floor with concrete sides and two aluminum hatches. The floor shall be sloped at two percent (2%) to a sump to collect rainwater.
4. A drain shall be provided in the valve and meter vault sump to discharge rainwater into the wet well. The drain pipe shall be four (4) inch DIP installed from a floor sump in the valve and meter vault to the wet well. A flapper style back-water check valve shall be installed on the valve and meter vault drain line to prevent a back-up of wastewater from the wet well into the valve and meter vault. The slope of the drain pipe shall be two percent (2%). The drain pipe shall be installed with a brass strainer and p-trap.

5. Valve and meter vaults are confined spaces; therefore, they require adequate means for ingress and egress, including OSHA approved ladders or steps and access hatches of sufficient size. There shall be at least twelve (12) inches between the edge of the vault ladder and the pipe wall to provide ease of access.

10. Force Main Design

a) *Separation from Potable Water Sources*

(1) Horizontal and Vertical Separations

Force mains shall maintain a ten (10) feet horizontal and eighteen (18) inches vertical separation below potable water mains. Measurement shall be from outside of pipe to outside of pipe. If site conditions do not allow such minimum separations, DCDWM may allow deviation on a case-by-case basis, if supported by data from the Developer's design engineer. Such deviation may allow installation of the force main closer to a potable water main, provided the force main is in a separate trench or if the potable water main is on an undisturbed earth shelf located on one side of the force main and at an elevation such that the bottom of the potable water main is at least eighteen (18) inches above the top of the force main.

If it is impossible to obtain proper horizontal and vertical separation as described above, both the force main and potable water main must be constructed of ductile iron pipe meeting DCDWM Standards and shall be pressure tested to two hundred (200) psi to assure water-tightness prior to backfilling.

(2) Crossings

Force mains crossing over or under potable water lines shall be laid to provide a minimum vertical distance of eighteen (18) inches between the outside of the force main and the outside of the potable water main. The crossing shall be arranged so that the force main joints will be equidistant and as far as possible from the water main joints. Where a force main crosses over a potable water main, adequate structural support shall be provided for the force main to maintain line and grade.

When it is impossible to obtain the proper vertical separation as stipulated above, one of the following methods must be specified:

- The force main shall be designed and constructed equal to the potable water main and shall be pressure tested to two hundred (200) psi to assure water tightness.
- Either the force main or potable water main may be encased in a watertight casing pipe or concrete encasement which extends ten (10) feet on both sides of the crossing, measured perpendicular to

the potable water main. The casing pipe shall meet the material requirements of steel casing for bore and jack crossings.

b) *Force Main Sizing*

All force main piping shall be designed to convey wastewater at a velocity between three (3.0) feet per second (fps) and seven (7.0) fps.

Wastewater velocity occurring in a force main shall be calculated using the continuity equation:

$$v = \frac{0.409Q}{D^2}$$

Where: v is the velocity, in feet per second
Q is the flow rate of a single pump, in gallons per minute
D is the diameter of the force main pipe, in inches

Force mains will not be approved to flow downhill into the receiving manhole. Gravity sewer lines must be installed to convey flow downhill to the existing receiving sewer system. Exceptions to this requirement may be granted on a case by case basis if, in the opinion of DCDWM, there is no benefit to DCDWM of having gravity sewer in the particular location involved.

Flexible couplings shall be used around the valves and the pump outlet. These couplings allow for slight misalignment during construction, permit easy disassembly and reassembly, and impede the transmission of damaging forces. A connection for a quick-connect bypass pump shall be provided for use in case of complete pump station failure.

(1) Surge and Water Hammer

Consideration shall be given to analyzing force mains in conjunction with their associated pump stations with respect to the development of hydraulic transients. Force main design shall be such that active devices for control of transient hydraulic conditions are minimized to the greatest extent possible. A surge analysis is required for all force mains greater than eight (8) inches in diameter. DCDWM reserves the right to require a surge analysis on a case-by-case basis. However, if this is not feasible, the following shall be acceptable control strategies:

1. Variable-speed pumps or constant-speed pumps in combination with control valves that open and close slowly.
2. Providing air scouring velocities in the force main.
3. Construction of the force main using a higher-strength pipe.
4. Vacuum relief valves.

5. Specialized control and/or release valves and other devices designed to prevent transient pressures from reaching levels that could damage the pump station and force main systems.

c) *Special Design Considerations*

(1) Freeze Protection

Protection from freezing should be provided for pipes above ground (such as bridge crossings).

(2) Thrust Restraint

Thrust blocking underground should be considered whenever pipe changes direction (tees and bends) and where unbalanced thrust forces (pressure and momentum) exist. Thrust blocking details are provided in Appendix M, Standard Details P-028, P-029, and P-030. Pipe thrust restraints need to be considered for pipelines above ground as well. Thrust restraint installation with tie-rod is provided in Standard Detail P-031, Appendix M.

(3) Cathodic Protection

Cathodic protection of ductile iron pipe should be considered whenever corrosive soils or stray current may occur from MARTA or Atlanta Gas Light (AGL) facilities.

D. Construction Materials and Installation

1. General Requirements

The Developer/Contractor shall furnish, install, and dedicate to DCDWM the entire pump station and force main system. The Developer/Contractor's Engineer (P.E. registered in the State of Georgia) shall design the system. It must include an access road and station that are deeded to DCDWM. The design must be reviewed and approved by the DCDPD and DCDWM.

The Developer/Contractor shall consult with the DCDWM during the design of the system. The system shall be designed with all components sized to meet the development's flow adjusted for peaks. The Developer/ Contractor shall size the system to meet future phases of the project. DCDWM may also decide on the installation of larger capacity pumps, wet wells, force mains, generators, etc. to account for future upstream flows that would eventually drain into the lift station. Pump station equipment and force mains are manufactured in certain discrete sizes. The difference in capacity between the development's projected flow and the discrete size selected for the Developer/Contractor's project is not to be considered as the Developer/Contractor's. Any such extra capacity beyond that reserved for the original Developer/Contractor becomes available for DCDWM to utilize at its

discretion. The Developer/Contractor may relinquish his reserved pumping capacity at any time by notifying DCDWM in writing.

The Developer/Applicant's engineer shall locate the pump station to drain the largest possible watershed sub-basin. DCDWM will investigate the service impact associated with future DeKalb County needs within the sub-basin and the potential installation of additional or larger force mains required to serve the sub-basin that will drain the pump station. If DCDWM decides an additional or larger force main is to be installed concurrently with the Developer/Contractor's project, the Developer/ Contractor will design the additional or larger mains and DCDPD and DCDWM must approve the design of said additional or larger mains.

If successful operation of a new pump station is dependent on existing pump station(s). The Developer/Applicant is required to evaluate the existing conditions and design system upgrades to maintain adequate capacities of the existing pump station(s). The design shall be submitted to the DCDPD for review and approval. During the start-up phase, the Developer/Applicant must demonstrate successful start-up of the upgrades to the existing pump station prior to start-up of the new pump station. If a developer has multiple pump stations in series, the start-up sequence shall begin at the point of connection to the existing County system and proceed upstream to the other pump station(s).

a) *Quality Assurance*

The pump manufacturer shall perform the following inspections and test on each pump before shipment from factory:

(1) Impeller, motor rating and electrical connections shall first be checked for compliance to the customer's purchase order.

(2) A motor and cable insulation test for moisture content and/or insulation defects shall be made.

(3) Prior to submergence, the pump shall be run dry to establish correct radiation and mechanical integrity.

(4) The pump shall be run submerged in water to a minimum of six (6) feet .

(5) After operational test No. 4, the insulation test (No. 2) is to be performed again.

A written report stating the foregoing steps have been done shall be supplied with each pump at the time of shipment.

b) *Maintenance of Traffic*

The Contractor is responsible for obtaining all road opening permits from the DeKalb County Department of Public Works Transportation Division at (770) 492-5222, including providing any required restoration bonds.

When a pumping station and/or force main is to be installed within the travelway of a DeKalb County or GDOT controlled road, a traffic control plan (TCP) will be required. The TCP, with the construction plans, shall be submitted to the reviewing agency for review and approval. The following roadway features shall be shown on the TCP:

- Pavement Width
- Pavement Type
- Speed Limit
- Traffic Lane Designation
- Pavement Markings
- Traffic Signs/Signals
- Sidestreets/Intersection Location

A TCP shall include the following:

- Legend
- Work Hour Restrictions
- Construction Sequence/Phasing
- Work Zone Designation
- Sign Placement
- Taper Length
- Traffic Movement Designation
- Drum/Cone/Barricade/Barrier Placement
- Flagging Requirement/Location
- Uniformed Police Officer Requirement/Location

The following agency shall be contacted when preparing a TCP:

- DeKalb County Department of Public Works Transportation Division (770) 492-5222

The following publications govern the design and installation of TCP's and devices:

- Manual on Uniform Traffic Control Devices (latest edition)
- GDOT Standard Specifications for Roads and Structures (latest edition)
- GDOT Roadway Design Manual(latest edition)

DCDWM shall obtain all road opening permits required by the GDOT. The Contractor is not permitted to make any type cuts on roadways requiring a permit from the GDOT until such time as the permit is provided and prominently displayed on-site.

All highway utilities and traffic controls are to be maintained and work shall conform to the rules and regulations of the authorities, including the use of Standard signs.

c) *Work within GDOT ROW*

All roadway restoration shall be done in accordance with the lawful requirements of the authorities within whose jurisdiction such pavement is located. All highway utilities and traffic controls are to be maintained, and work shall conform to the rules and regulations of the authorities, including the use of Standard signs. The Contractor shall furnish all such bonds or checks which may be required by the highway authorities to ensure proper restoration of paved areas.

d) *Operation and Maintenance Manual*

Contractor/Developer shall prepare and submit a minimum of four (4) hard copies and two (2) electronic copies of the Pump Station and Force Main Operation and Maintenance (O&M) Manual to DCDWM. Electronic O&M manuals copies shall be in PDF format and drawings are to be in AutoCAD 2005 or later. O&M Manuals shall contain the following constituents:

1. Technical Data
2. Performance and Operation Elevations
3. Pump Outline Drawing
4. Control Drawing and Data
5. Submittal Drawings
6. Access Frame Drawing
7. Redline As-Built Drawings
8. Typical Installation Guides
9. Technical Manuals
10. Specifications
11. Parts Lists
12. Equipment Instruction Manuals
13. Applicable Printed Warranty
14. Manufacturer's Equipment Storage Recommended Start-up Procedure Data Form.

The O&M manuals are also to contain, the following information:

1. Approved shop drawings, including design data for all installed equipment and each major component, and a pump curve/system curve analysis showing the design operating points.
2. Control panel wiring diagrams.
3. Warranty information for all installed equipment and each major component.

4. Inventory, functional descriptions, and complete operating instructions and troubleshooting for all installed equipment and each major component.
5. Instructions for start-up/shut-down as well as for calibration and adjustment of all installed equipment and each major component. Recommended maintenance management system, including preventative and predictive maintenance, for all installed equipment and each major component.
6. Contingency plan and analysis of critical safety issues.
7. Contact information for local service companies as well as instructions for replacement of all installed equipment and each major component.
8. Contact information for local contractors capable of performing emergency repairs.
9. Contact information for regulatory and other agencies.

e) *Training*

Each pump station installation in DCDWM requires 4 hours of on-site Operation and Maintenance training to be provided by the pump manufacturer to DCDWM maintenance personnel, and shall be paid for by the Developer/Contractor. The pump manufacturer shall be present for the duration of the training.

f) *Warranty*

One (1) year from the date of transfer of ownership to DCDWM a full preventative maintenance inspection shall be performed by an authorized ITT Flygt Corp. service representative; developer/contractor is responsible for the cost of this inspection and any repairs not covered under the warranty. All other equipment supplied shall have manufacturer's standard warranties; warranties shall provide minimum one (1) year of coverage. The developer/contractor shall be responsible for cost of repairs to any pumps, pipes, valves, meters, fittings, etc.

g) *Spare Parts*

All submersible wastewater pumping stations shall be furnished with the following spare parts and accessories:

1. 1 Each – High Level Float switch
2. 1 Each – Basic repair kit (ITT Flygt Corp.)
3. 1 Each – Discharge check valve
4. 4 Each – Factory operation and maintenance manuals
5. 1 Each – Phase monitor relay
6. 1 Each – Programming Key for Transfer Switch
7. 1 Each – Pressure Transducer
8. 4 Each – Sets of keys to the pump station and all lockable doors, cabinets or fixtures. The keys shall be the same as the existing keys to the pump station, generator, RTU, and Transfer Switch.
9. 1 Each – Valve key to operate the valves

10. 1 Each – Eight foot ladder to access the valve and meter vault when necessary.

2. Site Work

a) *Pump Station Site Layout*

An example pump station site layout is provided in Standard Detail P-001, Appendix M.

(1) A buffer shall be placed around each pump station site. The buffer will extend thirty (30) feet outside the fenced-in pump station to make a one hundred and twenty (120) foot by one hundred and twenty (120) foot buffer. DCDWM, at its discretion, may require a larger buffer depending on the proximity of structures, type of development, size of the pump station, or other factors which may indicate a need for additional buffer. This buffer is required in residential subdivisions, and shall be indicated on the final plat. In addition, a permanent easement, dedicated to DCDWM, shall be provided to include the required fenced-in area, with an additional 6-inches extending beyond the fence on all sides. The one hundred and twenty (120) foot by one hundred and twenty (120) foot buffer shall be even sloping grade away from the pad, free of "dips" and "hills" that could impede stormwater flow away from the pad. The one hundred and twenty (120) foot by one hundred and twenty (120) foot buffer area shall not overlap lot lines, detention ponds, drainage easements, or other similar elements.

(2) A twenty (20) foot wide Sanitary Sewer easement must be provided along the length of the force main unless it is located within the right-of-way.

(3) Earth Slopes around the pump station created by "fill" that are steeper than three to one (3:1) must be stabilized with "rip-rap". All fill slopes shall be compacted to not less than ninety-five percent (95%) of maximum density. A certified letter of compaction shall be provided to the inspector prior to final inspection.

(4) Developer shall install a concrete walk way from the driveway to the four (4) foot walk through gate.

(5) Developer shall install a system in front of the gate to divert water away from the station and into storm drain.

(6) Developer shall not install the pump station within twenty (20) feet of a storm drain catch basin.

(7) Developer shall clear tree limbs or other shrubbery that extends over the fence prior to acceptance.

b) *Access Road and Turnaround*

(1) An access road and turnaround must be provided for all pump stations. Access road is to be paved at a twenty (20) foot width minimum. Turnarounds are to have a forty-five (45) foot turning radius, extending thirty (30) feet from the edge-of pavement of the access road, to provide sufficient room for a vacujet truck-sized vehicle to turn around. The access road and turnaround shall be constructed of Portland cement concrete on a six-inch layer of compacted aggregate base course stone. In no case shall uncompacted gravel or stone material be allowed for access road construction. A cross section of the access road is provided in Standard Detail P-013, Appendix M. An example of the access road and turnaround are provided in Standard Detail P-012, Appendix M.

(2) The concrete access driveway shall have a twenty-eight (28) compressive strength of four thousand (4,000) psi and be reinforced with Number 5 rebar spaced twelve (12) inches on center on both the top and bottom faces and in each way as well, i.e. longitudinal and transverse. Pavement design shall consider loading exerted by an eighty thousand (80,000) pound tanker truck. Expansion joints shall be installed as needed in the access road and turn around.

(3) Site plan to show finished grade contour lines with two (2) foot intervals in and around the pump station and access road. Spot elevations shall be provided on the pump station pad to show proper drainage.

(4) If the station is within fifty (50) feet of a road, adequate guard rails must be provided to protect the station. If the access road is sloped greater than five (5) percent, the contractor is to install guard rails and / or bollards to prevent vehicles from rolling off the access road and turnaround. The guard rail / bollards are to be installed maximum five (5) feet from edge of access road and / or turnaround.

(5) The access drive must have adequate line of sight to allow the safe ingress and egress of maintenance vehicles.

(6) Lift Station Access Road/Driveway subgrade shall be accomplished in layers not exceeding six (6) inches in depth and each layer shall be thoroughly compacted to minimum ninety-five percent (95%) of the Modified Proctor maximum dry density as determined by ASTM D1557. This operation shall include any reshaping and wetting required to obtain proper compaction. All soft or otherwise unsuitable material shall be removed and replace with suitable material.

(7) Bollards shall be installed between the edge of the drive way and the pump station wet wells and vaults, as necessary, to prevent trucks from driving over the wet well and vaults.

c) *Utilities*

(1) The site plan shall show all existing and proposed utilities. All utility meters must be properly mounted outside of fenced station. If gas is required, gas pipe must be buried underground.

(2) Developer shall provide eye wash station complete with vacuum breaker attached to the potable water hose connection.

(3) Developer shall provide two (2) 110 volt 20amp electrical outlets (receptacles) in industrial metal weather proof boxes. One outlet shall be located near the pump station jib crane. The second shall be located on the control panel support frame.

(4) Potable Water Service

a). Materials and Installation

A copper potable water service with an acceptable double check valve backflow prevention device must be provided for operation and maintenance purposes. The hose bib shall be a freeze-proof above ground type, Simmons #4802 Yard Hydrant or approved equal. The hose bib shall not be installed directly into the concrete pump station pad. A one foot diameter, six inch deep, gravel area shall be provided centered on the hose bib, see Standard Detail P-004 in Appendix M. The Developer/Contractor will be responsible for installing the service line from the water meter to the pump station site, and purchasing the three-quarter (3/4) inch meter at his expense. Water meter shall be set at the right-of-way.

Backflow prevention device shall be installed in a hot box with heat tracing wire to prevent freezing. A yard hydrant with fifty (50) feet of three-quarter (3/4) inch UV resistant red rubber two hundred and fifty (250) psi commercial grade hose with brass nozzle must be installed with stainless steel hanger.

d) *Fencing*

(1) Materials and Installation

All submersible wastewater pumping stations shall be enclosed by a minimum forty-five (45) foot by forty-three (43) -foot fence and shall be as specified below:

1. Fences are to be eight (8) foot high #4 chain link wire with top rails and bottom tension wires.
2. Three (3) strands of barbed wire at the top on angled extension arms.
3. HDPE fence slats and blinds (architectural brown) by TopLock with bottom locking, as directed by DCDWM.
4. A two (2)foot chain that can be locked with a #2 Masterlock must be provided. Chain lengths shall be permanently welded to the fence.
5. Provide a twenty (20) foot wide double swing gate on four (4) inch diameter posts with a four (4) foot wide walkthrough gate.

Fence posts shall be set into three (3) feet of concrete and spaced ten (10) feet apart. An example security fence with access gate is presented in Standard Detail P-010, Appendix M.

A wooden privacy fence, six feet tall, shall be constructed around three sides of the security fence; the side of the security fence that contains the access gate will not be covered by the privacy fence. The wooden privacy fence shall be constructed three feet from the out side of the security fence. The area between the security fence and the wooden privacy fence shall be gravel, not grass.

e) *Noise Wall*

A noise wall is required, in lieu of a fence, when pumping station is located within forty (40) feet of a residence.

(1) Materials and Installation

The wall shall be constructed of eight (8) inch thick concrete block. The wall shall be painted with outdoor grade “architectural brown” paint.

The wall shall be eight (8) feet tall. A section view of the noise wall is depicted in Standard Detail P-011 in Appendix M.

f) *Security*

(1) All ports of entry into the pump station facility and structures shall be locked.

(2) The pump station facility shall be provided with adequate lighting to facilitate normal and emergency operation and maintenance activities. Install two (2) 120-volt high-pressure sodium security lights on a twenty (20) foot breakdown pole with automatic eye and pole lowering winch. The light shall be located near the pump station wet well, see Standard Detail P-001 in Appendix M for illustration. The pole shall be painted

Architectural Brown. The light shall turn on automatically at night. The light pole is depicted in Standard Detail P-006, Appendix M.

(3) Fixture lighting shall be provided as needed. Follow guidelines set in Standard Detail P-007, Appendix M.

(4) Safety placards for all pump station structures and equipment, as required by OSHA, shall be provided and be readily visible.

(5) The gate shall be equipped with an audio and visual alarm connected to the SCADA system.

g) *Flood Resistance*

(1) Pump station structures as well as all associated equipment and appurtenances shall be protected from the one hundred (100) year flood.

1. Such protection measures shall ensure that the pump station shall remain fully functional, operational, and free from physical damage during a one hundred (100) year flood.

2. The pump station shall be protected from inundation of floodwaters by elevating structures at least two (2) feet above and twenty-five (25) feet horizontally away the one hundred (100) year flood elevation.

(2) The one hundred (100) year flood elevation shall be that as identified on the most recent FEMA Flood Insurance Rate map when available or as established through appropriate modeling techniques.

h) *Removal of Water*

The Contractor shall pump out, or otherwise remove and properly dispose of, any water (e.g. storm water and/or ground water) as fast as it collects in the excavation. Water shall not accumulate or be present in the excavated trench at any time. This removal is required regardless of the source.

All necessary precautions shall be taken to prevent disturbance at, and to properly drain, any areas upon which concrete is to be poured, or upon which pipe is to be laid.

Approved, and appropriate, equipment with sufficient capacity to remove water from the work shall be kept on site at all times. Equipment shall be used in such a manner as to not withdraw sand or cement from concrete. Contractor is also to ensure that removal of any liquids will not interfere with the proper laying of pipe, or prosecution of any of the required work for the complete construction of the project.

The flow in sewers, drains, gutters, or water courses encountered during the construction shall be adequately provided for by the Contractor to ensure these flows do not interfere with the prosecution of the Work, and are maintained in such a manner as to ensure continuity of flow at all times.

Unless otherwise permitted, ground water encountered within the limits of excavation shall be depressed to an elevation not less than twelve (12) inches below the bottom of such excavation. This depression is to be done before pipe laying, precast structure installation or concrete work is started and shall be so maintained until concrete and joint materials have attained initial set.

Should sewage or any other odorous liquids be encountered during the work in the excavation, DCDWM shall be immediately notified. DCDWM will then determine if actions by the Contractor have caused the source of the odorous liquids to leak and will promptly notify the appropriate regulatory agencies, if necessary. In addition, DCDWM will instruct the Contractor as to what actions, if any, the Contractor can and cannot perform prior to any directives which may be issued by the regulatory agencies. Any sewage will be pumped and hauled to a manhole, pump station, or advanced wastewater facility, as directed by DCDWM. Any other liquids will be properly disposed of as directed by DCDWM and/or any regulatory agencies having jurisdiction.

i) *Trenching and Excavation*

All excavation shall be open cut unless otherwise indicated on the "approved" design or directed by DCDWM. In general, topsoil may be removed by machine method. Excavation below topsoil may also be performed by machine, but shall be supplemented by such hand dressing or leveling as may be required to conform to lines and grades as given by DCDWM. Material so removed shall be used in backfill, making embankments, filling low areas, or as otherwise directed.

Hand tool excavation shall be used where necessary to protect existing utilities and structures.

All slopes shall be carefully cut or graded by hand to grades required by DCDWM and shall be tamped or otherwise compacted to maintain the material in position.

The final trimming of the bottoms and sides of excavations which is to be adjacent to masonry shall be done just before the concrete is placed, or poured.

In open or improved lawn areas, excavation should be done, if possible, utilizing a tractor-mounted backhoe and extreme care should be taken to avoid damage to adjoining lawn areas. In areas not readily accessible by machinery and where excavation is required near existing trees and shrubberies which may be damaged by excavation equipment, the trench shall be excavated using hand tools.

The minimum width of trench from an elevation of twelve (12) inches above the top of the pipe to the bottom of the trench shall be as indicated on the Gravity Sanitary Sewer Standard Detail S-018, Appendix I.

Excavation of pipe trenches with sides sloping to the trench bottom will not be permitted.

Should trenches be excavated with more than the specified maximum widths, DCDWM may require the Contractor to furnish concrete cradles or concrete encasement for the pipe.

j) *Sheeting and Shoring*

The Contractor shall be responsible for supporting and maintaining required excavations even to the extent of sheeting and shoring the sides and ends of excavations with timber or other supports. If the sheeting, braces, shores, stringers, wailing timbers, or other supports are not properly placed, or are insufficient, the Contractor shall provide additional or stronger supports as may be required. The requirement of sheeting or shoring, or of the addition of supports, shall not relieve the Contractor of his responsibility of their sufficiency.

Trench sheeting shall be left in place until the backfilling has been completed to an elevation not less than twelve (12) inches above the top of the pipe. Unless otherwise ordered by DCDWM, sheeting shall be cut off at the top of the lowest set of bracing and the upper section shall be removed.

Where in the opinion of DCDWM the removal of sheeting may endanger the work, such sheeting will be ordered to be left in place and the tops cut off as directed or as specified above. Removal of the sheeting shall be done in such a manner as to prevent injurious caving of the sides. All voids left by the sheeting along trenches shall be carefully filled and rammed with suitable tools.

In quicksand or soft ground, sheeting shall be driven to such depth below the bottom of the trench as directed.

k) *Bedding*

Bedding materials shall be in accordance with GDOT Standard Specification Section 812, Type II Foundation Backfill.

The bedding material shall be placed in the bottom of the trench after it has been excavated to an elevation sufficient to permit the placing of not less than six (6) inches, or as directed. The surface of the bedding material shall be spread to form a uniform support for the pipe and appurtenances. After installing each section of the pipe, additional bedding material shall be placed on either side of the pipe to an elevation consistent with the bedding type specified herein, as indicated on the plans or specifications, or as directed by DCDWM. This material is to be well tamped and compacted into place so as to secure a firm, even bearing.

Bedding material shall be placed for the full width of the trench bottom.

l) *Backfilling*

(1) General

Backfill material shall be compacted to a density of not less than 95% of the maximum dry density as determined by the standard proctor test ASTM D698 (latest version). When directed, the Contractor shall arrange to have such compaction tests conducted by an independent testing firm; the number and locations to be determined by DCDWM. Compaction tests shall be performed at the contractor's expense.

Materials used for backfilling shall be free from all perishable organics or other objectionable materials, and shall contain no stones larger than twelve (12) inches in its longest dimension.

Excavations shall be backfilled with No. 57 stone.

If, in the opinion of DCDWM, the original excavated material is unsuitable for use as backfill, such as perishable matter, refuse, building materials, wire, brush, stumps, ashes, large stones, muck, or other soft materials, the Contractor shall properly dispose of the objectionable materials, and shall furnish, haul, and place borrow material suitable for proper backfill.

Backfilling shall not be done in freezing weather, except by permission of DCDWM, and shall not be done using frozen materials or upon frozen materials.

All backfilling shall be left with smooth, even surfaces, properly graded, and shall be maintained in such condition until final completion and acceptance of the work, not withstanding applicable warranty periods. Where directed by DCDWM, the Contractor shall mound the backfill slightly above the adjacent ground to allow for settlement.

(2) Trenches

Backfill in trenches where pipe has been laid shall be placed continuously by hand in layers not exceeding six (6) inches in thickness and carefully and thoroughly consolidated by tamping simultaneously on both sides of the pipe to a height of twelve (12) inches above the top of the pipe. This backfilling and compacting must be done promptly and before any backfill material is deposited directly from a machine bucket, loaders, trucks, or other mechanical equipment. Once utilizing a machine bucket for backfilling, the bucket must be lowered into the trench to deposit the material in such a manner as to avoid the shock of falling earth which

could injure or damage the pipe or structure. Under no circumstances should the material be allowed to fall from the machine or loader bucket directly onto the pipe or conduit in the trench. Follow Gravity Sanitary Sewer Standard Detail S-018, Appendix I, for trench backfill procedure.

Except as otherwise ordered by DCDWM, all forms, bracing, and lumber shall be removed from the trench before backfilling.

Bottoms of trenches in earth must be shaped or molded and compacted to the contour of the outside of the pipe, using bedding materials, as directed, or where indicated on the approved design, to give full support to the lower segment of the pipe. This shall be done in such a manner as to prevent any subsequent settlement of the pipe. Boulders or loose rock which might bear against the pipe will not be permitted in the trench bottom, or in the backfill within the first two (2) feet above the top of the pipe. Bottoms of excavations which are of loose granular soils shall be compacted by vibratory compactor prior to laying of pipe to a minimum density of ninety-five percent (95%) of the maximum dry density as determined by the standard proctor test ASTM D698 (latest version).

Where foundation conditions are such that proper bedding cannot be provided, such as in quicksand, the Contractor may be directed by DCDWM to provide foundation cushion, concrete cradles, or other special provisions to provide support for the pipe.

Only after the backfill has been placed and hand-compacted to at least twelve (12) inches above the top of the pipe may the work proceed in the placement of the remaining backfill material, which must be carefully placed and compacted. In streets, other surfaced areas, or where directed, the backfill shall be placed and compacted in lifts not to exceed twelve (12) inches in thickness. All precautions must be taken to avoid having any unincorporated material which may result in future settlement in these areas. Compaction shall be accomplished by approved mechanical tampers. The number of men tamping shall at no time be less than the number of men backfilling, and if necessary, additional men shall be kept in the trench to spread the material.

m) *Restoration of Pavements, Sidewalk, and Curbs*

Follow Standard Detail P-032, in Appendix M, for the repair of concrete and asphaltic concrete surfaces.

(1) Work Included

The Contractor shall furnish all materials for, and properly restore all pavements, drives, sidewalks, and curbs, which may have been damaged, removed, or disturbed as a result of accomplishing the Work. Restoration

and replacement shall be made to the satisfaction of DCDWM. This shall include in general, but without limitation, all necessary concrete, reinforcing steel, stone, cinders, gravel, slag, asphalt, or other bituminous material necessary for the proper completion and restoration of the Work as may be required, directed, or specified.

(2) Materials and Workmanship

Materials to be used in the repair and restoration of pavements, drives, sidewalks, and curbs, shall be first quality. All materials removed while accomplishing the work shall be disposed by the Contractor on sites approved by DCDWM. No existing material may be reused in the Work unless pre-approved by DCDWM. All workmanship shall be first class. Concrete shall be Class B plain concrete with a twenty-eight (28) day compressive strength of three thousand (3,000) psi, unless otherwise specified in the drawings or specifications.

(3) Restoring Pavements

After the pipe has been laid, appurtenant work constructed, and backfill completed, the Contractor shall furnish, place, restore, and maintain all pavements or roadway surfaces which have been removed or damaged by or in pursuit of the Work. The form and degree of restoration shall be as specified on the approved design, as specified herein, and/or as directed by DCDWM.

For backfilling roadway cuts, only No. 57 stone backfill shall be used. See Section IV.D.2.*k* for bedding requirements and Section IV.D.2.*l* for trench backfill requirements.

All roadway restoration shall be done in accordance with the lawful requirements of the authorities within whose jurisdiction such pavement is located. All highway utilities and traffic controls are to be maintained and work shall conform to the rules and regulations of the authorities, including the use of standard signs. The Contractor shall furnish all such bonds or checks which may be required by the highway authorities to ensure proper restoration of paved areas.

When removal of pavement is required (other than gravel types) the Contractor shall outline the area to be removed by making saw-cuts. Saw-cuts shall be vertical to allow the removal of the paving material in straight lines. If pavement breakage occurs beyond the saw-cut, the Contractor shall make a new straight saw-cut beyond the furthest point of breakage.

The concrete base course shall extend the full width of the trench cut plus a minimum of twelve (12) inches on either side of the trench. The existing

pavement shall be neatly sawed along both sides of the ditch. The concrete used shall be Class A or B Concrete. Once the concrete base course has properly set, the concrete surface shall be cleaned and a minimum of one (1) inch thick asphaltic concrete pavement shall be laid to match the level of the adjacent pavement, see Gravity Standard Detail S-016 in Appendix I for patch and resurfacing requirements.

At any time that an existing road is cut longitudinally for a distance greater than one hundred (100) feet, the concrete shall be poured flush with existing and the street shall be resurfaced curb to curb with one (1) inch minimum of asphaltic concrete. Existing road shall be restored to preconstruction condition.

The Contractor shall be responsible for maintaining all pavement cuts prior to project acceptance and during the one-year maintenance period. Should any failures be noted associated with any portion of the work, the Contractor shall remove all such damaged surfaces and make full repairs; this includes adding and re-compacting approved backfill materials, placing and maintaining bituminous concrete pavement or stone road surfaces. All required pavement repairs necessitated due to pavement failure, either prior to final project acceptance or during the one-year maintenance period, shall be completed by the Contractor within five (5) working days of notification by DCDWM. Bituminous concrete pavements or stone road surfaces, which the Contractor is required to replace, shall be in at least as good condition at the end of the one-year maintenance period as it was before construction.

(4) Roadway Permits

The Contractor is responsible for obtaining all road opening permits from the DeKalb County Department of Public Works Transportation Division at (770)492-5222, including providing any required restoration bonds.

DCDWM shall obtain all road opening permits required by the GDOT. The Contractor is not permitted to make any type of cuts on roadways requiring a permit from the GDOT until such time as the permit is provided and prominently displayed on-site.

(5) Restoring Driveway Pavements

The Contractor shall repair or replace all driveway sections disturbed by the process of the Work. Driveways shall be constructed of the same materials and to the same thickness of the adjoining wearing surface or to the minimums indicated on GDOT Standard Detail A1 in Appendix E, whichever is greater. In restoring driveways, the subsoil and foundation material shall be well-compacted so as to prevent any future settlement or cracking of the driveway pavement. In restoring concrete driveways, the

base course shall be wetted prior to pouring new concrete. Where necessary to cut a concrete driveway, the cuts shall be made with a masonry saw, providing a smooth, straight line completely across the driveway. Partial cut-outs, crooked cuts, or cuts made by any other method other than masonry saw are not permitted. In general, or where directed, concrete slab removal shall be made in entire pavement sections to the nearest existing expansion-joint.

(6) Restoring Curbs

The Contractor shall restore all curbs and combination curbs and gutters which have been removed or disturbed in the progress of the work. Curbing shall be made to conform accurately in size, line, grade, and materials as the adjoining section. In restoring curbs, the subsoil and foundation material shall be well compacted so as to prevent any future settlement of the concrete curbing. The sub-base shall be thoroughly rolled or tamped and shall be wet just before the concrete is placed, but shall show no pools of water.

(7) Restoring Sidewalks

The Contractor shall restore all sidewalks which have been removed or disturbed in the progress of the work. Sidewalks shall be constructed to the same dimensions and materials as the adjoining sections.

Where necessary to cut a sidewalk, entire sections shall be removed and replaced unless otherwise directed by DCDWM.

The sub-base shall be thoroughly rolled or tamped and shall be wetted just before the concrete is placed, but shall show no pools of water.

(8) Contractor's Warranty of Restored Paved Surfaces

The Contractor shall make every provision to ensure compaction by properly tamping any backfill under areas to be paved. Any settlement which may occur during the one (1) year warranty period shall be corrected by the Contractor at his expense, including removing, re-compacting, and replacing any paved surfaces which show signs of settlement, whether or not actual damage to the paved surface has occurred. This shall apply to all paved surfaces including streets, drives, sidewalks, and curbs and gutters.

Should settlement, cracks, or other indications of failure, or impending failure, appear in the paved surface, the adjoining paving shall be removed to the extent necessary to secure a firm, undisturbed bearing. All removal, re-compaction, and replacement shall be in accordance with the specifications concerning these operations as stated elsewhere.

n) *Seeding / Sod Replacement*

(1) Work Included

The developer/contractor shall furnish all materials for, and properly restore to the satisfaction of DCDWM, all ground surfaces irrespective of type, which may be disturbed in the progress of the work. The developer/contractor shall refer to the AASHTO "Green Book" for erosion and sedimentation control for additional standards and requirements not listed in these Standards.

This shall include in general but without limitation, the spreading of topsoil, seeding, sod replacement, fertilizing, and mulching required to restore disturbed areas as may be necessary, directed, or specified herein. On all "sod" type lawns and other improved, well established grass areas, the sod/grass shall be carefully removed, kept alive, and replaced after the backfilling and grading is finished. The Contractor shall also remove all spoil from such areas as quickly as possible after the excavation is backfilled, and he shall leave the premises in as good condition as before undertaking the work. It is the intent of these Design Standards to restore all disturbed areas, to place seed and mulch in areas not specifically identified as improved lawns, to place topsoil and seed where improved lawns existed prior to construction, and to provide for "sod" removal and replacement in areas identified as such prior to construction.

(2) Temporary Sedimentation and Erosion Control

Limitation of Exposure of Erodible Earth: Contractor is to provide erosion and/or pollution control measures to prevent contamination of any river, stream, lake, tidal waters, reservoir, canal, or other water impoundments or to prevent detrimental effects on property outside the project right-of-way or damage to the project.

Use temporary erosion control features to:

1. Correct conditions that develop during construction which were not foreseen at the time of design,
2. Control erosion prior to the time it is practical to construct permanent control features,
3. Provide immediate temporary control of erosion that develops during normal construction operation.

Schedule operations such that the area of unprotected erodible earth exposed at any one time is not larger than the minimum area necessary for efficient construction operations, and the duration of exposure of uncompleted construction to the elements is as short as practicable.

(a) Acceptable Erosion Control Measures:

1. Temporary Mulching:

   Furnish and apply a two (2) to four (4) inch thick blanket of straw or hay mulch to areas, as needed, then mix or force the mulch into the top two (2) inches of the soil in order to temporarily control erosion. When beginning permanent grassing operations, plow under temporary mulch materials in conjunction with preparation of the ground.

2. Artificial Coverings:

   a. Use artificial coverings composed of natural or synthetic fiber mats, plastic sheeting, or netting as protection against erosion during temporary pauses in construction caused by inclement weather or other circumstances. Remove the material when construction resumes.

   b. Use artificial coverings as erosion control blankets to facilitate plant growth while permanent grassing is being established. For the purpose described, use non-toxic, biodegradable, natural or synthetic woven fiber mats.

   Install erosion control blankets capable of sustaining a maximum design velocity of six and one-half (6.5) ft/sec as determined from tests performed by Utah State University, Texas Transportation Institute or an independent testing laboratory.

Install all sediment control devices in a timely manner to ensure the control of sediment and the protection of lakes, streams, gulf or ocean waters, or any wetlands associated therewith and to any adjacent property outside the right-of-way as required.

At sites where exposure to such sensitive areas is prevalent, complete the installation of any sediment control device prior to the commencement of any earthwork.

(b) Acceptable Sedimentation Control Measures:

1. Sandbags: Furnish and place sandbags in configurations to control erosion and siltation.

2. Berms: Construct temporary earth berms to divert the flow of water from an erodible surface.

3. Baled Hay or Straw: Provide bales having minimum dimensions of fourteen (14) by eighteen (18) by thrity (36) inches at the time of placement. Construct Baled Hay or Straw dams as needed to protect against downstream accumulations of sediment.

4. Temporary Silt Fences: Furnish, install, maintain, and remove temporary silt fences, in accordance with the manufacturer's directions.

5. Rock Bags: Furnish and place rock bags to control erosion and siltation.

(3) Standard Specification for Seeding / Sod Replacement

The requirements of the GDOT "Standard Specifications - Construction of Roads and Bridges", Current Edition, and as revised to date, shall apply insofar as they are applicable for all seeding/sod replacement.

(4) Topsoil

Where directed by DCDWM, area to be seeded shall be covered with a layer of topsoil. The topsoil shall be of sufficient thickness that when spread and compacted, a minimum of four (4) inches will be available. The Contractor shall furnish natural topsoil of a good condition and tillable structure. Obtain topsoil as borrow from an outside source of uniform texture, drainage, and other characteristics so as to constitute a homogeneous soil meeting the requirements of GDOT, and as approved by DCDWM. The Contractor shall furnish topsoil that is free from objectionable materials such as hard clods, stiff clay, sods, hardpan, partially disintegrated rock, large roots, or other materials that are not integrally a natural component of good agricultural soils, and which are harmful or not beneficial for successful plant growth. Do not use topsoil containing frost or in an excessively wet (muddy) condition. If utilizing existing material obtained from the initial excavation of the work site for re-use as topsoil, the Contractor must first obtain approval from DCDWM as to suitability of its content, including approval of location and method of storage of topsoil for re-use.

(5) Seeding

Seeding shall be accomplished by the Contractor using a properly proportioned mixture of inoculated seed approved for use in "Zone One" as detailed in the GDOT's Standard Specifications. Seeding shall only be permitted in the specified planting season for "Zone One" for the specified mixture. All seeded areas shall be uniformly mulched immediately after seeding.

The Contractor shall maintain all seeded areas to include mowing, watering, and re-seeding any bare areas until a satisfactory stand of grass has been obtained and final acceptance of the work has been received from DCDWM. Areas showing evidence of settlement or loss of topsoil shall be rebuilt and re-seeded as required.

In general, the Contractor shall replace existing maintained lawn areas with the same type of grass as was established prior to construction. Any deviations or alternatives proposed due to unavailability of seasonal grasses, or inappropriateness of seeding due to time of year must be presented to the DCDWM Inspector in writing with signed authorization of homeowner.

(6) Preparation of Seeded/Sod Areas

The subgrade for any areas to be seeded shall be brought to a uniform grade by the Contractor and shall be free of stones larger than one (1) inch, roots, gravel, or other debris. Where topsoil is required by DCDWM, the topsoil shall be uniformly graded, trimmed, and raked free of unsuitable materials, ridges, bumps, or depressions. Over this area, the Contractor shall spread agricultural lime at the rate of one hundred (100) pounds per one thousand (1,000) square feet and shall spread a general fertilizer uniformly on the surface of the ground at a rate of thirty-five (35) pounds per one thousand (1,000) square feet. The lime and fertilizer shall be mixed uniformly into the top four (4) inches of the soil using suitable harrows, tillers, or other mechanical equipment.

(7) Sod Removal/Replacement

On all well established and "sod" type lawns, the Contractor may at his discretion, utilizing suitable sod cutting equipment, cut the sod into rolls, carefully remove and store the sod , and water and maintain in a viable condition for replacement after backfill. Any such sod removed and replaced in this manner must be demonstrated to be living to the DCDWM Inspector prior to final acceptance of project.

If sod is to be replaced with "new" sod, the Contractor shall only replace using sod of the same type as that removed. Any deviations or alternatives proposed due to unavailability of seasonal grasses must be presented to DCDWM Inspector in writing with signed authorization of homeowner.

3. Concrete

a) *General Requirements*

1. Pump station structures shall be designed and built in complete compliance with all applicable state, local, and federal codes as well as any applicable OSHA Standards.

2. The slump of all concrete will be not more than four (4) inches or less than 1 inch unless specifically excepted by the Owner.
3. The air content by volume of all concrete will be from three percent (3%) to six percent (6%).
4. Concrete will contain a water-reducing and retarding admixture, unless specifically excepted.
5. Do not exceed the water-cement ratio of the design mix which includes all water added. Water-cement ratio of the design mix shall be per Manufacturer's recommendation.
6. The water reducing and retarding admixture will be in accordance with the manufacturer's requirements.
7. Concrete

    a. Concrete will be structural concrete with a twenty-eight (28) day compressive strength of four thousand (4,000) psi.
    b. Proportion concrete in accordance with the latest requirements of ACI 211.1.

4. Pump Station Pad

a) *Size*

A minimum six (6) inch thick, forty-five (45) foot by forty-three (43) foot concrete pad shall be installed.

b) *Material and Installation*

The pavement design shall consider loading exerted by an eighty thousand (80,000) pound tanker truck. Pump station pad shall be at a minimum reinforced with Number 5 rebar spaced twelve (12) inches on centered on both the top and bottom faces and in each way as well, i.e. longitudinal and transverse. Expansion joints shall be installed as needed in the pump station pad.

A concrete curb shall be constructed underground around the pumping station, as shown in Standard Detail P-008 in Appendix M. Asphalt is not acceptable for the pad.

The pump station pad shall be constructed on a six-inch layer of compacted aggregate base course stone over a prepared subgrade. Pump Station Subgrade to be constructed on earth fill, of select material. Selected backfill material shall consist of finely divided earth, stone, dust, sand, crushed stone, or other approved material free from all wood, vegetable matter, debris, and other objectionable material and having scattered clods, stone or broken concrete less than two (2) inches in maximum dimension.

The pump station concrete pad shall be installed with a 0.5% slope from the center of the pad to the edge of the pad. The pump station concrete pad shall be concaved and sloped away from the station to divert the storm water away from

the station and toward a storm drain. Concrete must extend six (6) inches past fence posts all the way around the fence. Additionally, the installation of a flume, or stormwater piping (perforated pipe wrapped in filter fabric), to divert stormwater from the pad to a stormwater pond may be required by DCDWM.

The fill shall be placed in layers of not more than six inches compacted thickness and compacted by the use of heavy rolling or power tamping equipment to secure at least ninety-five percent (95%) of the Standard Proctor Dry Density. Backfills around structures shall be properly placed and compacted. The fills shall be brought up in layers. The layers shall be thoroughly compacted to at least ninety-five percent (95%) of the Standard Proctor Dry Density, each layer to be not deeper than six inches compacted thickness. Compaction around structures shall be by use of heavy power tamping equipment.

5. Wet Well and Accessories

a) *General*

(1) If the wet well is less than thirty (30) feet deep, the pump station shall be a precast concrete wet well with self-cleaning bottom.

(2) If the wet well is greater than thirty (30) feet deep, the pump station shall be cast in place designed by a licensed professional engineer in the state of Georgia.

(3) The wet well shall be provided with a depth as required to maintain the active storage volume, the emergency storage volume, and allow for proper operation of the duplex pumps.

b) *Materials and Installation*

(1) Wet Well Sections

The minimum wet well diameter shall be six (6) feet. The minimum wall thickness shall be eight (8) inches for all wet wells. Pre-cast wet wells shall be constructed with a monolithic base structure as shown in Standard Detail P-014, Appendix M. The minimum base thickness shall be twelve (12) inches. The pre-cast top slab shall have thickness of ten (10) inches. Concrete for wet wells shall be Type II, four thousand (4,000) psi at twenty-eight (28) days. Barrel, top and base sections shall have tongue and groove joints.

Base sections shall be placed on bedding rock. The bedding rock shall be firmly tamped and made smooth and level to assure uniform contact and support of the pre-cast structure. A pre-cast base section shall be carefully placed on the prepared bedding so as to be fully and uniformly supported in true alignment and making sure that all entering pipes can be inserted on proper grade. Pre-cast wet well section shall be handled by lift rings or

non-penetrating lift holes. The first pre-cast sections shall be placed and carefully adjusted to true grade and alignment. Pre-cast sections shall be placed and aligned to provide vertical alignment with a one-quarter (1/4) inch maximum tolerance per five (5) feet of depth.

If wet well base or cone are to be cast in place then Number 5 rebar at twelve (12) inch off-center will be anchored as dowel bars to ensure monolithic construction.

The sections shall be uniformly supported by the base structure and shall not bear directly on any of the pipes. The completed wet well shall be rigid, true to dimensions, and watertight.

Wet well top slab shall extend three (3) inches above the pump station pad.

If ground water is encountered during construction of the wet well, a six (6) inch perforated drain pipe surrounded by Number 57 Stone and wrapped with filter fabric is to be installed. The perforated drain pipe is to begin at the wet well base, slope downward and discharging to daylight as low as possible per geotechnical engineer's recommendation.

(2) Section Joints

All joints will use 'O' Ring Gaskets for seal between well sections. The date of manufacture and the name or trademark of the manufacturer shall be clearly marked on each pre-cast section.

(3) Lifting Joints

Sections shall be cured by an approved method for at last twenty-eight (28) days prior to painting and shall not be shipped until at least two (2) days after having been painted. Lifting rings or non-penetrating lift holes shall be provided for after having been painted. Lifting rings or non-penetrating lift holes shall be provided for handling pre-cast wet well sections.

(4) Access Hatch and Safety Grate

The wet well access hatch shall be double leaf aluminum hatch and shall be sized appropriately to ensure ease of pump removal. Wet well access opening shall be installed with a safety grate.

As manufactured for ITT Flygt Corp. Each "Safe Grate" shall be designed to combine covering of the opening, fall through protection per OSHA Standard 1910.23 and controlled confine space entry per OSHA Standard 1910.146. Welding shall be in accordance with ANSI/AWS D1.2-90 Structural Welding Code for Aluminum.

The safety grate shall be made of 6061-T6 aluminum with a minimum ultimate strength of 38,000 psi and a minimum yield strength of thirty-five thousand (35,000) psi, as per A.S.T.M. B221. Grate design shall use safety factors as defined in the "Specifications for Aluminum Structures", by the Aluminum Association, Inc., 5th addition, for "Bridge Type Structures".

Grating shall be designed to withstand a minimum live load of three hundred (300) pounds per squared foot. Deflection shall not exceed 1/150th of the span.

Grate opening shall be five (5) inch by five (5) inch, which will allow for visual inspection, limited maintenance and float adjustments while the safety grate fall through protection is left in place.

Design must assure that the fall through protection is in place before the doors can be closed, thereby protecting the next operator.

Each grate shall be provided with a permanent hinging system, which will lock the grate in the ninety (90) degree position once opened. Grates in the open position create a physical barrier around the opening, protecting passing pedestrians.

Each grate shall have an opening arm, which will allow opening of the grate, while providing the grate as a barrier between the operator and the pit. The opening arm shall also be equipped with a controlled confined space entry lock (lock provided by others). This locking device will prevent unauthorized entry to the confined space. The grating system will allow anyone to make visual inspection and float adjustments without entering the confined space.

Grate shall be coated with an OSHA typed safety orange color, promoting visual awareness of the hazard. The aluminum safety grates shall receive a two-coat powder coat system, applied by the electrostatic spray process. The base coat is a thermosetting epoxy powder coat finishes with a minimum thickness of two (2) to four (4) mils. The topcoat is a mar-resistant, TGIC polyester powder coating with a minimum thickness of two (2) to four (4) mils. Each coat shall be baked at 350-375 degrees F. until cured.

(5) Wet Well Lining and Coatings

The exterior of the wet well shall be coated with two (2) coats of three (3) mils coal tar epoxy. Coating shall be continuous, free of pin holes and or voids, and it is to be applied in accordance with manufacturer's instructions. After wet well top slab, base and all sections have been

permanently set into place, seal outside with a chemically compatible non-shrink grout prior to exterior application of protective coal tar coating.

Non-penetrating lift holes shall be filled with non-shrink grout after installation of the sections. Concrete surfaces shall be free from oil, curing compounds, dust, dirt, and other interfering materials removed by sandblasting and shall be fully cured prior to the application of any coatings.

Pumping station wet well interiors shall be lined by one of the following two options:

i. Option 1, HDPE Liner with FLYGT Fiberglass Tub Bottom:

The interior of the concrete wet well shall have a fully adhered HDPE lining system minimum thickness five (5) millimeters installed at the foundry as an integral part of the concrete casting process. The interior of the wet well shall be lined with HDPE from the top precast section to just above the tub bottom. The HDPE shall be gray in coloration, not black. The lining system shall provide a sealed membrane to prevent penetration of gasses and liquids into the substrate. Precast section joints/seams shall be wrapped with eight (8) inch joint wrap and seam welded with epoxy resin. Precast section pick holes shall be seam welded with epoxy resin. The FLYGT fiberglass tub bottom, installed at the precast facility, shall be spray lined with a forty percent (40%) fiberglass and sixty percent (60%) resin liner. HDPE pump station lining is presented in Standard Detail P-015, Appendix M.

a. ITT FLYTT, Fiberglass Tub Bottom:

This specification provides requirements for the materials, design and construction of the ITT Flygt Corp. TOP fiberglass self-cleaning pump station basin insert. The Developer/Contractor has the option of using this basin insert or a concrete chamfered sump bottom.

1. Materials

The thermosetting resin used shall be unsaturated polyester and phenyl acrylate (vinyl ester) resins of suitable commercial grade that complies with ITT Flygt Corp. AB Design Standard 3265.00. Reinforcing materials shall be suitable grade glass fiber as chopped or continuous roving strands, chopped strand mat or woven roving. Glass fiber material shall comply with latest version of the following Standards:

- Roving glass fiber: ISO 2797
- Chopped strand mat: ISO 2559

- Woven roving: ISO 2113

2. Manufacturing

   The ITT Flygt Corp. Top pump station basin can be manufactured by one of the following common techniques:

   - Filament winding
   - Hand Lay-up
   - Spray application upon a form
   - Vacuum molding
   - Press molding

3. Construction Details

   The ITT Flygt Corp. Top pump station basis must be able to withstand expected service conditions encountered due to transportation, installation and contact with concrete, water and wastewater. The laminate build-up shall have minimum twenty-five (25%) glass by mass and minimum thirty-five (35%) resin by mass. All cut edges shall be coated and sealed with one coat of topcoat. Finished structural laminate shall be covered with one layer of sufficient quality; minimum 0.2mm clear coat gel on inside of basin surface. The minimum thickness shall be:

   - Up to 40” diameter: 4mm
   - Up to 56” diameter: 5mm
   - Up to 72” diameter: 6mm

4. Design Basis

   Design temperature range shall be between –30 degree C and +40 degree C.

ii. Option 2, Spray Coating with Concrete Chamfer Bottom:

The interior of the concrete wet well and concrete chamfered wet well bottom shall be spray coated with two hundred (200) mils of S-301, manufactured by Warren Environmental Inc., installed per manufacturer’s recommendations. Prior to applying the spray liner, eight (8) inch joint wrap shall be applied to the precast section joint seams. Surface preparation, thickness, mixing and application shall be in accordance with the manufacturer's instructions.

(6) Odor Control

i. The odor control system shall include neutralizing or preventing production of odorous compounds, treatment of odorous

compounds, containing and treating foul air, and enhancing dispersion of foul air.

ii. Odor complaints from pump stations are generally caused by the release of hydrogen sulfide (H_2S) gas. Therefore, the chemical feed or air treatment systems are primarily designed to control H_2S.

iii. Odor reduction system manufacturer will be responsible for complete coordination of all equipment, piping, controls and conduit and wiring required for the odor reduction system.

iv. Options for odor control include chemical feed systems, which are designed to prevent the formation and release of odorous compounds, and air treatment systems, which are designed to capture and treat odors after they are produced, by means of adsorption, absorption, oxidation, or chemical biological stabilization. The odor reduction system may include but is not limited to the following items:

1. Odor reduction equipment; i.e. Carbon Filters.
2. Chemical feed.

v. Activated Carbon Requirements:

1. Recommended Carbon Manufacturers:
   a. Westates Carbon Co., Inc., Los Angeles, California 90007.
   b. Calgon Carbon Corporation, Pittsburgh, Pennsylvania 15230.
2. Activated carbon shall be either:
   a. Virgin, granular gas-phase type suitable for control of sewage treatment odors, designed for high loadings of organic compounds
   b. Virgin, vapor phase type impregnated with caustic, capable of in-place generation suitable for control of sewage treatment odors, designed for high loadings of organic compound.
3. Carbon substrate characteristics:
   a. Mesh size distribution: 4 x 8 min.
   b. Mean particle diameter, min.: 3.7 mm, ASTM D2862.
   c. Uniformity coefficient, max.: 1.9 per foot at bed depth AWWA B604.
   d. Iodine number: 1000 or 1050.
   e. Maximum head loss at 50 fpm velocity densed packed bed: 1.9 IN WC/FT bed depth.
4. Carbon Usage Rate Test:

a. Contractor/developer shall supply DCDWM a quarterly analysis of the activated carbon to be reported as "H2S Capacity."
b. Contractor/developer shall furnish this service for one (1) year from start-up of the systems.
c. The testing shall establish the carbon usage rate and the optimum replacement or regeneration procedure to be used. This information shall be presented to DCDWM at the time of ownership transfer.

vi. Chemical Feed System Components:

1. Chemical pumps: Double diaphragm.
2. Piping, valves, and fittings: PVC.
3. Pulsation dampeners: Materials resistant to pumped solution, size as recommended by the manufacturer.
4. Siphon valves: Material resistant to pumped solution.
5. Flow meter: Variable area type with indicator.
6. Chemical Storage Tanks:
   a One-piece cross-linked high-density polyethylene with UV inhibitor.
   b Calibration molded into the tank in gallons and liters; molded in tie-down lugs.

(7) Ventilation Equipment

i. Pump stations shall be adequately vented in complete compliance with all applicable local and state building codes as well as OSHA and NFPA Standards.
ii. At a minimum, pump station wet wells shall be provided with a gooseneck-type vent. Active ventilation units shall also be acceptable.
iii. Vents shall be constructed of stainless steel or aluminum and be adequately supported to withstand damage during normal and emergency operation and maintenance.
iv. Vent elevations shall be a minimum of two feet above the 100-year flood elevation as identified on the most recent FEMA map when available or as established through appropriate modeling techniques.
v. Vents shall be provided with an insect/bird screen of stainless steel or aluminum. Under no circumstances shall steel or galvanized steel be used.

6. Overflow Vault

a) *Materials and Installation*

Overflow vault shall be sized according to Section IV.C.8.

The walls and floor of the overflow vault shall be eight (8) inches thick.

The overflow and drain pipe connections from the wet well to the overflow vault shall be six (6) inch DIP.

The overflow vault shall be precast with two (2) millimeters (mm) of HDPE liner or sprayed with S-301, manufactured by Warren Environmental Inc. Seams in the HDPE liner shall be welded with epoxy resin in accordance with manufacturer recommendations.

The exterior of the overflow vault shall be coated with two (2) coats of three (3) mil coal tar epoxy.

The overflow vault shall be installed below ground with an access manhole located at the downstream end. The access manhole shall be installed with Safety Grate, to meet specifications presented in Section IV.D.5.b)(4). The overflow vault shall be vented with a four (4) inch Sch 40 SST or aluminum vent pipe to minimize the buildup of hydrogen sulfide gas (H_2S).

The overflow vault shall be designed to withstand GDOT loads if the overflow vault is located under the driveway area or if vehicles have access to the area where the overflow vault is located. The top slab reinforcement shall be designed to withstand eighty thousand (80,000) pounds of load.

The overflow pipe invert shall be equal to the wet well high level alarm elevation. The overflow pipe shall maintain a two percent (2%) slope and discharge into the wall of the overflow vault. The overflow pipe shall not discharge into a corner of the overflow vault.

The overflow vault drain pipe connection to the wet well shall begin at a point in the floor of the overflow vault, maintain a two percent (2%) slope, and discharge into the pumping station wet well minimum one (1) foot above the wet well bottom. The drain pipe shall be supplied with a six (6) inch plug valve, see Section IV.C.8**.**

The overflow vault floor shall have a two percent (2%) slope from the walls toward the floor drain.

The overflow vault shall be in accordance with Standard Detail P-017 in Appendix M.

7. Valve and Meter Vault

a) *Materials and Installation*

The valve and meter vault shall be twelve (12) feet by six (6) feet (inside horizontal dimensions) and shall be constructed of concrete. The floor shall be sloped at two percent (2%) to a sump to collect rainwater.

Two (2) seventy-two (72) inch by sixty (60) inch double leaf aluminum hatches with 300 psi load rating, recessed lifting handle, and 316 SST hinges shall be provided for all valve and meter vaults.

Valves and flow meters shall be located directly under hatch openings. Valves shall be operational from the ground surface without the need of entering the vault. Flow meters and pressure gauges shall be readable from the ground surface without the need of entry. Piping and appurtenances within the valve and meter vault shall be set three (3) feet above floor elevation and shall be provided with stainless steel pipe supports. Piping within the valve vault shall be minimum three (3) feet below the ground surface.

Valve and meter vault, pumping station, and other main structures shall be located minimum five (5) feet apart.

The exterior of the vault shall receive two (2) coats of three (3) mils coal tar epoxy. Vault top slab shall extend three inches above the pump station pad.

All pipes, valves, meters, and fittings within vault shall receive, after installation, one (1) three (3) mil coat of suitable primer and one (1) three (3) mil coat of suitable gray paint.

8. Pumps

a) *General*

(1) Pump stations conveying residential, commercial, institutional, or industrial domestic wastewater shall be provided with pumps that are suitable for continuous duty in conveying raw, unscreened wastewater, as required.

(2) All pumps shall be of identical size and type within each pump station facility.

b) *Materials and Installation*

(1) General

1. Furnish and install a minimum of two (2) heavy-duty submersible constant speed wastewater pumps, as specified in Section IV.C.6.

Variable speed pumps may be permitted by DCDWM on a case-by-case basis.

2. Pumps and Panels shall be manufactured by ITT Flygt Corp. Contact ITT Flygt Corp., at 770-932-4320, ext. 18.
3. Pump suction and discharge openings shall be four (4) inches, six (6) inches, or eight (8) inches, but no less than four (4) inches or greater than eight (8) inches.
4. Staying within the design parameters, the pump selection shall be the largest pump with minimum diameter impeller to allow for future growth. Motor horsepower shall be non-overloading for a maximum diameter impeller.
5. DCDWM has approved the installation of the Pre-Engineering Package Submersible Wastewater Lift Station, supplied by Romtec Utilities, as an alternate. Romtec Utilities can be contacted at (541) 496-3541.
6. Contractor shall store, rotate, and handle pumps according to manufacturer's recommendations.
7. Pumps shall be mounted in the wet well as shown in the Standard Detail P-014, Appendix M.
8. Pumps shall be readily removable and replaceable without dewatering the wet well or disconnecting any piping in the wet well. Each pump lifting chain shall be equipped with ITT FLYGT "grip eye". Contractor will be responsible for demonstration of pump removal at the request of DCDWM.
9. Base elbow shall be anchored to the wet well floor with stainless steel "J" bolts set six (6) inches into concrete. "J" bolts shall be hooked under reinforcing steel.
10. The pumps shall automatically connect to discharge elbows when lowered into place on a duel 316 SST (stainless steel) two (2) inch guide rail system requiring no bolts, nuts, or fasteners to affect proper sealing. The guide bars shall not support any portion of the weight of the pumps.
11. Mating of the pump discharge flange and base elbow face shall be accomplished by a simple linear downward motion and utilize smooth metal surface contact.
12. No portion of the pump shall bear directly on the floor of the wet well and no rotary motion of the pump shall be required for sealing. Minimum of six (6) inches concrete shall be poured in bottom of the wet well after centerline of access cover is determined. Reinforcing steel to be placed as indicated in the Standard Detail P-014, Appendix M.
13. Sufficient submergence of the pump shall be provided to prevent the occurrence of vortexing within the wet well. In no case shall the all pumps-off activation level be less than the minimum level

required for successful pump operation, as recommended by the pump manufacturer.

(2) Pump Body and Accessories

Major components shall be of gray cast iron, ASTM A-48, class 35B, with smooth surface devoid of blowholes or other irregularities. All exposed nuts or bolts shall be AISI type 304 stainless steel construction. All metal surfaces coming into contact with the wastewater, other than stainless steel or brass, shall be protected by a factory applied spray coating of alkyd primer and a synthetic resin enamel finish. Sealing design shall incorporate metal-to-metal contact between machined surfaces. Critical mating surfaces where watertight sealing is required shall be machined and fitted with Nitrile rubber O-rings. Fittings will be the result of controlled compression of rubber O-rings in two planes and O-ring contact of four sides without the requirement of a specific torque limit. Rectangular cross-sectioned gaskets requiring specific torque limits to achieve compression shall not be considered as adequate or equal. No secondary sealing compounds, elliptical O-rings, grease or other devices shall be used.

(3) Cable Entry

The cable entry assembly shall meet European Standards, unless otherwise permitted by DCDWM. The cable entry seal shall preclude specific torque requirements to insure a watertight and submersible seal. The cable entry shall consist of a single cylindrical elastomer grommet, flanked by washers, all having a close tolerance fit against the cable outside diameter and compressed by the body containing a strain relief function, separate from the function of sealing the cable. The assembly shall provide ease of changing the cable, when necessary, using the same entry seal. The cable entry junction chamber and motor shall be separated by a terminal board, which shall isolate the interior from foreign material gaining access through the pump top. Epoxies, silicones, or other secondary sealing systems shall not be considered acceptable.

(4) Bearings

The pump shaft shall rotate on two (2) bearings. Motor bearings shall be permanently grease lubricated. The upper bearing shall be a single row roller bearing. The lower bearing shall be a two-row angular contact bearing to compensate for axial thrust and radial forces. Single row lower bearings are not acceptable.

(5) Mechanical Seal

Each pump shall be provided with a tandem mechanical shaft seal system consisting of two (2) totally independent seal assemblies. The seals shall operate in a lubricant reservoir that hydrodynamically lubricates the

lapped seal faces at a constant rate. The lower, primary seal unit, located between the pump and the lubricant chamber, shall contain one (1) stationary and one (1) positively driven rotating tungsten-carbide ring. The upper, secondary seal unit, located between the pump and the lubricant chamber and the motor housing, shall contain one (1) stationary tungsten-carbide seal ring and one (1) positively driven rotating carbon seal ring. Each seal interface shall be held in contact by its own spring system. The seals shall require neither maintenance nor adjustment nor depend on direction of rotation for sealing. The following seal types shall not be considered acceptable nor equal to the dual independent seal specified: shaft seals without positively driven rotating members, or conventional double mechanical seals containing either a common single or double spring acting between the upper and lower seal faces. No system requiring a pressure differential to offset pressure and to affect sealing shall be used. Each pump shall be provided with a lubricant chamber for the shaft sealing system. The lubricant chamber shall be designed to prevent overfilling and to provide lubricant expansion capacity. The drain and inspection plug, with positive anti-leak seal shall be easily accessible from the outside. The seal system shall not rely upon the pumped media for lubrication. The motor shall be able to operate dry without damage while pumping under load. Seal lubricant shall be FDA approved non-toxic.

(6) Pump Shaft

Pump and motor shaft shall be the same unit. The pump shaft is an extension of the motor shaft. Couplings shall not be acceptable. Pump shafts shall be constructed of AISI type 400 SST or carbon steel with BHN of three hundred and fifty (350) or more. Larger diameter shaft can be carbon steel with four hundred (400) stainless steel sleeve.

(7) Impeller (for N-pumps)

The impeller(s) shall be FLYGT N-type of gray cast iron, Class 35B, dynamically balanced, semi-open, Multi-vane, back-swept, non-clog design. The impeller vane leading edges shall be mechanically self-cleaned upon each rotation as they pass across a spiral groove located on the volute suction, which shall keep them clear of debris, maintaining an unobstructed leading edge. The impeller(s) vanes shall have screw-shaped leading edges that are hardened to Rc 45 and shall be capable of handling solids, fibrous materials, heavy sludge and other matter found in waste water. The screw shape of the impeller inlet shall provide an inducing effect for the handling of sludge and rag-laden wastewater. Impellers shall be locked to the shaft and held by impeller bolt.

(8) Wear Rings

Wear rings in pumps shall be constructed of hardened four hundred (400) stainless steel (SST) with minimum Brinnell Hardness Number (BHN) of

three hundred (300). A wear ring system shall be used to provide efficient sealing between the volute and suction inlet of the impeller. Each pump shall be equipped with a nitrite rubber coated steel ring insert that is drive fitted to the volute inlet. This pump shall also have a stainless steel impeller wear ring heat-shrink fitted onto the suction inlet of the impeller.

(9) Volute and Flush Valve

The pump volute shall be of A48 Class 35B gray cast iron and shall have (an) integral spiral shaped cast groove(s) at the suction of the volute. The internal volute bottom or insert ring shall provide effective sealing between the pump volute and the multi-vane, semi-open impeller. The sharp spiral groove(s) shall provide the shearing edge(s) across which each impeller vane leading edge shall cross during its rotation in order to remain unobstructed. The clearance between the internal volute bottom and the impeller leading edges shall be adjustable.

Pump volute shall be manufactured to accommodate a device designed by the pump manufacturer to produce a flushing action at the start of pump cycle. Water from the pump will be forced through the device into the wet well as a jet flushing stream. This device is mounted on the pump. It is based on the ejector principle with a ball as closing device. The operation is automatic and induced by the pump flow and pressure. Electrical components or cabling will not be accepted. Install one (1) flush valve on one (1) pump per installation.

(10) Protection

All stators shall incorporate thermal switches in series to monitor the temperature of each phase winding. At 125°C (260°F) the thermal switches shall open, stop the motor, and activate an alarm.

(11) Motor

1. The pump motor shall be a NEMA B design, induction type with a squirrel cage rotor, shell type design, housed in an air filled, watertight chamber. Pump motors shall be approved as explosion proof to FM explosion proof Class 1, Division 1 group C and D hardness conditions. Pump motor shall be constructed in an ISO 9001 approved facility. The stator windings shall be insulated with moisture resistant Class H insulation rated for 180°C (356°F). The stator shall be insulated by the tickle impregnation method using Class H monomer-free polyester resin resulting in a winding fill factor of at least ninety-five percent (95%). The motor shall be inverter duty rated in accordance with NEMA MG1, Part 31. The stator shall be heat-shrink fitted into the cast iron stator housing. The use of multiple step dip and bake-type stator insulation process is not acceptable. The use of bolts, pins or other fastening devices

requiring penetration of the stator housing is not acceptable. The motor shall be designed for continuous duty handling pumped media of 40°C (104°F) and capable of up to 6 evenly spaced starts per hour. The rotor bars and short circuit rings shall be made of cast aluminum. Thermal switches set to open at 125°C (260°F) shall embedded in the stator end coils to monitor the temperature of each phase winding. These thermal switches shall be used in conjunction with and supplemental to external motor overload protection and shall be connected to the control panel. The junction chamber containing the terminal board, shall be hermetically sealed from the motor by an elastomer compression seal. Connection between the cable conductors and stator leads shall be made with threaded compression type binding posts permanently affixed to a terminal board. The motor and the pump shall be produced by the same manufacturer. Pump motors shall be accompanied by a material certification specifying the hardness of wearable parts from the manufacturer. Motor shall be installed within the pump casing at the pump manufacturing facility.

2. The combined service factor (combined effect of voltage, frequency and specific gravity) shall be a minimum of 1.15. The motor shall have a voltage tolerance of plus or minus ten percent (10%). The motor shall be designed for operation up to 40°C (104°F) ambient and with a temperature rise not to exceed 80°C (176°F). A performance chart shall be provided showing curves for torque, current, power factor, input output kW, and efficiency. This chart shall also include data on starting and no-load characteristics.
3. The power cable shall be sized according to the NEC and ICEA Standards and shall be of sufficient length to reach the junction box without the need of any splices, plus an additional twenty (20) feet of cable length. The outer jacket of the cable shall be oil resistant SPC. The motor and cable shall be capable of continuous submergence under water without loss of watertight integrity to a depth of sixty-five (65) feet. The additional cable length shall be coiled and secured within the wet well.
4. The motor horsepower shall be adequate so that the pump is non-overloading throughout the entire pump performance curve from shut-off through run-out.
5. Soft Starters are required for pumps twenty (20) horsepower and greater.

9. Hoist

a) *<u>Materials and Installation</u>*

Stationary electric hoists, “jib crane”, are the only acceptable type for pump station applications. All hoists shall be of stationary type mounted on a concrete

pad of sufficient size and strength suitable for the hoist and anticipated load size and weight. An example jib crane base is provided as Standard Detail P-005. As shown in P-005, number five (5) rebar with two (2) ninety (90) degree bends shall anchor the jib crane to the concrete pad. Dimensions shown in P-005 are minimum values; the pad may need to be larger and/or deeper depending on the pump weight and jib crane installed. Electric hoist shall be weather proof with a weather proof cover. Electric hoists to include ratchet type manual crank. Hoists shall be epoxy coated in a three (3) step process using Ameron Amercoat 68HS epoxy primer, Amercoat 385 epoxy, and a finish coat of Amercoat 450HS polyurethane paint. Portable hoists will not be allowed.

The hoist system shall be designed so that the pumps can be lifted from the wet well and placed on a platform or maintenance vehicle easily. The hoist and accessories shall be rated for not less than one and one-half (1.5) times the heaviest anticipated load.

Acceptable hoist manufacturers for use in DCDWM are Thern.

The hoist system shall be mounted next to the pumping station. Special care shall be taken to assure that the proper length and strength of hoist cable is provided.

Hoist shall be installed with stainless steel anchor bolts.

Power for the hoist shall be supplied via the pump station control panel with a dedicated circuit breaker located on the inner panel door. For example hoist placement reference Standard Detail P-014 in Appendix M.

10. Piping

a) *Materials and Installation*

(1) Diameter

Pipe diameter shall be larger than the diameter of the maximum solid size that is passed by the pumps present in the pump station. The minimum allowable force main size is four (4) inches and the minimum allowable solid size that the pumps shall be able to pass is three (3) inches. Size the pipe to achieve a flow velocity between three (3.0) and six (6.0) feet per second.

(2) Wet Well Discharge Piping

Each pump shall have a separate discharge line from the base elbow in the wet well and through the valve vault to a point three (3) feet past the exterior of discharge side of the valve and meter vault. Discharge piping shall be 304 SST conforming to the latest requirements of ANSI/AWWA C104/A21.4-85 and have flange ends. These discharge lines shall be a minimum of four (4) inches in size. All inlet pipes shall be properly installed so as to form an integral watertight unit. All pipes, valves, and

fittings, unless otherwise stated, shall have flanged ends. All pipes, valves, and fittings shall be epoxy lined. All bolts, nuts, and washers used to connect these flange ends shall be of type 316 stainless steel. All pipe valves and fittings shall be installed as indicated in Standard Detail P-014, Appendix M.

For pump stations less than eighteen (18) feet deep, each vertical discharge pipe in the wet well shall be of one (1) piece, continuous length. If the depth of the wet well exceeds eighteen (18) feet, flange pipe connections shall be used to connect the riser pipes and 314 SST pipe supports restraining the pipe to the wall of the wet well shall be used every five (5) feet. Under no condition shall adapter flanges be permitted in the wet well. All pump discharge pipes and fittings within the wet well shall receive, after installation, two (2) coats of coal tar epoxy paint. Each coat shall be eight (8) mil dry thicknesses.

(3) Yard Piping

A bypass connection shall be installed on the force main in the valve and meter vault so emergency bypass pumping may be performed. The bypass line shall be quick disconnect equal to the size of the force main and have a plug valve and a check valve.

(4) Force Main

a. Materials

i. Force mains shall be constructed of ductile iron (DI) pipe. DI pipe, appurtenances, and fittings shall conform to the latest requirements of ANSI/AWWA C151/A21.51, “Ductile Iron Pipe, Centrifugally Cast in Metal Molds for Water or Other Liquids”. All pipes, valves, and fitting shall be epoxy lined.

ii. The thickness and pressure class of DI pipe required for the installation and operating conditions during the expected service life of the force main shall be determined in accordance with the latest requirements of ANSI/AWWA C150/A21.50, “Thickness Design of Ductile Iron Pipe”.

iii. Fittings for DI pipe shall conform to the latest requirements of ANSI/AWWA C110/A21.10, “Ductile-Iron and Gray-Iron Fittings, 3 In. through 48 In. for Water and Other Liquids” or ANSI/AWWA C153/A21.53, “Ductile Iron Compact Fittings, 3 In. through 24 In. and 54 In. through 66 In., for Water Service”.

iv. Force mains of DI pipe shall have mechanical or gasket push-on type joints. If exposed, force mains of DI pipe

shall have flanged joints. Restrained joint DI pipe may be used for anchoring purposes.

1. Gaskets shall be manufactured of vulcanized natural or synthetic rubber in accordance with the latest requirements of ANSI/AWWA C111/A21.11, "Rubber Gasket Joints for Ductile Iron and Gray-Iron Pressure Pipe and Fittings".

2. Flanged DI pipe shall conform to the latest requirements of ANSI/AWWA C115/A21.15, "Flanged Ductile Iron Pipe with Ductile Iron or Gray Iron Threaded Flanges".

v. Consideration shall be given to the existence of or the potential for development of corrosive environments within and outside the force main shall be performed. Sources of corrosion may include: acidic soils, septic wastewater, and air entrainment within the force main. Where corrosion is deemed to be a serious problem, DI pipe shall be provided with cathodic protection or an internal/external encasement, lining, or coating appropriate for the pipe material and situation. Such encasements, linings, and coatings shall be manufactured or applied in accordance with the appropriate ANSI and AWWA Standards.

b. Cleaning / Maintenance

A self-cleansing velocity of at least three (3.0) feet per second shall be provided throughout the length of the force main. This will resuspend any solids that may have settled out. However, if the length of force main exceeds five thousand (5,000) feet, the Developer/Contractor shall provide all of the following to further prevent the accumulation of solids:

Drain or blow-off valves provided at all low points in the force main. Such valves shall be either connected to an available entry point into the wastewater collection system, provided with a connection for a vacuum pumper truck, and designed with some other method to prevent an intentional discharge of wastewater during their operation.

Flushing ports along the length of the force main as well as a water supply of sufficient quantity and pressure. Such ports shall either be connected to an available entry point into the wastewater collection system, provided with a connection for a vacuum pumper truck, and designed with some other method to prevent an intentional discharge of wastewater during their operation.

Pigging device launching and retrieval stations shall be of a size sufficient to clean the inside diameter of the force main.

c. Stream Crossings

Force mains shall be routed such that the number of stream crossings is minimized. When a stream crossing is required by the design, the crossing shall be as nearly perpendicular to the stream flow as possible.

DI pipe with joints equivalent to water main standards or a watertight ferrous encasement pipe shall be used to construct force mains that cross streams.

Force main bedding, haunching, and backfill shall be appropriate for the installation location and pipe material. However, the ability of the bedding and backfill material to readily erode, cause siltation, damage the force main during installation, and corrode the force main after installation shall also be considered.

Only DI with flanged joints, used in conjunction with adequate supports, shall be used for aerial stream crossings.

1. Supports for aerial stream crossings shall be designed to prevent frost heave, overturning, and settlement.
2. The force main shall be adequately protected from freezing and heaving.
3. The impact of floodwaters and debris shall be considered during the design of aerial crossings. The bottom of the force main pipes shall be placed no lower than the elevation of the twenty-five (25) year flood stage of the stream.

d. Slope

No segments of the force main can have zero slopes, to limit the accumulation of gasses. Low points shall also be avoided to prevent the accumulation of solids. High points shall have air release combination valves as determined by specifics of the design.

e. Receiving Manhole:

The receiving manhole shall be coated with two (2) coats of three (3) mills coal tar epoxy, three (3) mm of 40% fiberglass and 60% resin spray liner or precast lined with three (3) mm of HDPE. Precast section joints/seams shall be wrapped with eight (8) inch joint wrap. Surface preparation, thickness, mixing and application shall be in accordance with the manufacturer's instructions.

The receiving manhole shall have a four (4) inch vent with an activated carbon filter canister attachment to control odor. The activated carbon filter requirements are provided in Section IV.D.5.b)(6).v.

(5) Anchorage

Pipe under pressure shall be adequately anchored to resist thrusts that may develop at bends, tees, plugs, and at any other location where a change in flow direction occurs.

Such anchoring shall be provided through the use of concrete thrust blocking. Restrained joint pipe may be used, if approved by DCDWM, if the Developer/Contractor does not have sufficient room to install thrust blocking.

Concrete thrust blocks shall be located between the fitting to be anchored and undisturbed soil material. Appropriate thrust reaction block bearing areas shall be calculated based not only on the maximum expected force but also on the soil material. Concrete thrust blocks shall have a minimum compressive strength of two thousand (2,000) pounds per square inch. Thrust blocking details are provided in Appendix M, Standard Details P-028, P-029, and P-030. Pipe thrust restraints need to be considered for pipelines above ground as well. Thrust restraint installation with tie-rod is provided in Standard Detail P-031, Appendix M.

Self-restrained joints or joints restrained with tie rods and clamps shall both be acceptable. In both cases, component parts shall either be manufactured of corrosion-resistant materials or coated liberally with a corrosion-retarding product.

Anchoring devices shall be designed to withstand force main pressures of at least twenty-five percent (25%) greater than the maximum pump shut-off head plus an allowance for water hammer and an appropriate factor of safety.

(6) Pipe Handling

Unload pipe, fittings, and accessories from trucks with hoists or by skidding. Do not skid or roll pipe handled on skidways against pipe already on the ground. Under no circumstances are said materials to be dropped off any delivery vehicle. Should any material be accidentally dropped, it shall be immediately set aside, and thoroughly inspected by DCDWM before any decision is made regarding its acceptability. If damage occurs to the lining, make repairs or replacement as directed by DCDWM. If there is any question regarding acceptability of said suspect materials by DCDWM, the contractor shall either remove and replace the

questionable materials, or obtain a sworn statement from the manufacturer certifying the materials as "undamaged".

Use proper, suitable tools and appliances for the safe and convenient handling and laying of pipe and fittings. Take great care to prevent the coating and lining from being damaged.

Pipe may not be "strung", or laid out, along the project within existing highway rights-of-way, unless specifically directed to do so by DCDWM, and only then after receiving permission from the road authority which has jurisdiction.

The Contractor shall carefully examine all pipe and fittings for defects just before laying. No pipe or fitting which is known to be defective shall be laid. In the event that defective pipe or fittings are discovered after having been laid, the Contractor shall remove and replace with sound pipe or fittings in a manner satisfactory to and at no addition cost to DCDWM.

It is the Contractor's responsibility to maintain a clean work site and clean materials throughout the project. All pipe and fittings shall be kept free from mud, dirt, and debris while stored on site, and shall be thoroughly cleaned before being laid. During any stoppage in the laying of pipe, and when ending construction for the day, the Contractor shall install a mechanical or fitted plug in the open end of the pipe to prevent contamination of the pipeline. Should any accidental contamination occur, the pipe shall be thoroughly cleaned and swabbed out, and inspected by DCDWM, before new or further pipe installation may commence.

(7) Pipe Laying

The pipe shall be laid and jointed in the following manner:

1. A minimum burial depth of four (4) feet (within the fence line) and five (5) feet (outside the fence line) as measured from the crown of the pipe to the ground surface shall be provided.
2. Clean Ring and Spigot: The gasket, groove, and pipe spigot shall be wiped clean of all foreign material.
3. Install Gasket: Insert the ring in the groove taking care to see that the gasket is evenly seated and free from twists.
4. Apply Lubricant: Lubricate the spigot end of the pipe from the pipe end to the full insertion mark. Use only the lubricant approved by the manufacturer. After the spigot end has been lubricated it must be kept clean and free of dirt, sand or embedment material. If foreign matter adheres to the lubricated end, the spigot must be wiped clean and re-lubricated.

5. Assembly: After the pipe sections are aligned, the spigot end should be pushed into the bell or coupling until it hits the stop and/or the reference insertion mark is in the proper location. The recommended assembly method is the use of a bar and a block. Pullers such as a "come along" may also be used if the pipe is protected from the chain or cable. Pipe deflection/offset shall not exceed seventy five percent (75%) of manufacturer's recommended limit.
6. A flexible through-wall connector shall be used at pipe penetrations through structures to allow for differential settlement.
7. Minimum separations between pump stations/force mains and natural features, other utilities, etc. shall be maintained.

11. Bore and Jack for Force Mains

a) *Casing Pipe*

Casing pipe shall be new and unused pipe. The casing shall be made from steel plate having a minimum yield strength of thirty-five thousand (35,000) psi. The steel plate shall also meet the chemical requirements of ASTM A36, latest edition. The outside of the casing pipe shall be coated with coal tar epoxy having a minimum dry film thickness of sixteen (16) mils. Surface preparation shall be SSPC-SP-10. Epoxy shall have a minimum solids content of sixty-five (65) percent by volume and shall be air or airless spray applied; minimum drying time shall be seven days. Brushing shall be permitted in small areas only. All coating and recoating shall be done in strict accordance with the manufacturer's recommendations. Epoxy shall be Tnemec, Carboline, or Valspar.

The thicknesses of casing shown below are minimum thicknesses. Actual thicknesses shall be determined by the casing installer, based on its evaluation of the required forces to be exerted on the casing when jacking. Any buckling of the casing due to jacking forces shall be repaired at no additional cost to DCDWM.

The diameters of casings listed below are the minimum to be used. Larger casings, with the County Engineer's approval, may be provided at no additional cost to the DCDWM, for whatever reasons the Contractor may decide, whether casing size availability, line and grade tolerances, soil conditions, etc. Casing and pipe support installation requirements are provided in Potable Water Standard Detail W-024, Appendix D.

b) *Casing Sizes:*

Under railroads, the Contractor shall provide uncoated casings, unless otherwise required. The Contractor shall supply casing in accordance with the encroachment permits that are issued.

Casing Sizes Under Railroads or Highways			
Pipe Diameter (inches)	Casing Diameter, (inches)	Wall Thickness, (inches)	
		Coated	Uncoated
6	14	.250	0.282
8	18	.250	0.313
10	20	.281	0.344
12	22	.312	0.375
14	24	.344	0.407
16	30	.406	0.469
18	30	.406	0.469
20	32	.438	0.501
24	36	.469	0.532
30	42	.500	0.563
36	48	.625	0.688
42	54	.750	0.813

c) *Casing Spacers*

Casing spacers shall meet one of the following requirements:

Casing spacers shall be flanged, bolt-on style with a two-section stainless steel shell lined with a PVC liner, minimum 0.09-inch thick having a hardness of eighty-five (85) to ninety (90) durometer, minimum fourteen (14) gauge band and ten (10) gauge risers, with two (2) inch wide glass reinforced polyester insulating skids. Runners shall be attached to stainless steel risers which shall be properly welded to the shell. The height of the runners and risers shall be manufactured such that the pipe does not float within the casing. Casing spacers shall be as manufactured by Cascade Waterworks Manufacturing Company, Pipeline Seal and Insulator, Inc., or Advanced Products and Systems, Inc.

12. Valves and Appurtenances

a) *Check Valves*

(1) Materials and Installation

The check valves shall be non-clog. There shall not be outside levers, weights, springs, dash pots or other accessories required. The ball shall be hollow steel with an exterior of nitrile rubber; it shall be resistant to grease, petroleum products, animal and vegetable fats, diluted concentrations of acids and alkalines (pH 4-10), tearing and abrasion. The

body and cover shall be of gray cast iron, Class 35. Flange drilling shall be according to AISI B16.1, Class 125.

The valves shall consist of three (3) components; body, cover, and ball (one moving part). The design of the valves shall be such that it keeps solids, stringy material, grit, rags, etc., moving without the need for back flushing. In the operating mode, the ball shall not significantly impeded flow through the valve, and shall provide full flow equal to the nominal size of the valve.

Acceptable check valve manufacturers are Clow, Kennedy and M&H.

Furnish and install two (2) ball check valves; one (1) for each pump discharge.

When a double pumping station is constructed a check valve shall be installed on each force main, five (5) feet upstream of the joining wye or tee. This shall allow for the isolation of each pumping station. Check valve shall be installed inside the valve and meter vault.

b) *Plug Valves*

(1) Materials and Installation

Plug valves shall be non-lubricated, eccentric type, resilient seated type with flanged joint ends as manufactured by Clow, M&H, DeZurik, or approved equal. Plug valves shall be installed with the below specified actuator type, with the valve seat in the correct orientation with respect to flow direction. Valves shall open by turning to the left, (counter-clockwise), when viewed from the stem. The valve port area shall be a minimum of eighty percent (80%) of the full pipe area. Valve pressure ratings, body flanges, and wall thicknesses shall be in full conformance with ANSI B16.1, latest revision. Valves shall seal leak-tight against full rated pressure in both directions. Valve seats shall be tested to provide leak tight shut off to one hundred and seventy-five (175) psi for valves through twelve (12) inch, with pressure in either direction. In addition, a hydrostatic shell test shall be performed with the plug open to a pressure twice that of rating specified above to demonstrate overall pressure integrity of the valve body.

Valve bodies shall be constructed of high strength cast iron conforming to ASTM A126, Class B and AWWA C504, latest revisions. Valve seats shall be formed by cast bodies with raised eccentric seats which have a corrosion-resistant welded-on overlay of not less than ninety percent (90%) pure nickel on all surfaces contacting the plug face or valve seats shall be replaceable 316 stainless steel seats. Valve seats shall be in accordance with AWWA C504 and AWWA C507, latest revisions.

Valves shall be furnished with resilient faced plugs with neoprene facing, suitable for use with wastewater. Valves shall be furnished with replaceable, permanently lubricated, stainless steel or fiberglass backed woven Teflon fiber, sleeve-type bearings in the upper and lower plug journals. Plug stem bearings shall comply with AWWA C504 and C507, latest revisions. Valves shall be bolted bonnet design. Valves shaft seals shall be in accordance with AWWA C504 and AWWA C507, latest revisions. All exposed valve nuts, bolts, springs, washers, and the like shall be Type 316 stainless steel. Installation shall be per manufacture's recommendations.

1. Interior Valve Lining

   All interior ferrous surfaces of the plug valve that will have contact with wastewater, except the valve seating surfaces, shall be coated with a factory applied, fusion bonded or thermosetting epoxy coating in accordance with AWWA C550, latest revision. Coating shall be holiday-free with a minimum thickness of twelve (12) mils DFT. Surfaces shall be clean, dry and free from rust, oil and grease before coating.

2. Plug Valve Actuators

   Plug valves installed in valve vaults shall have mechanical gear actuators with handwheel operators designed for submerged service.

   Plug valves buried underground shall have gear actuators with a two (2) inch square nut operator designed for buried and submerged service.

   Actuator shall clearly indicate valve position for above-ground and valve vault installations and an adjustable stop shall be provided to set closing torque. Actuator shall be capable of withstanding an over-torque without damage up to three hundred (300) foot-pounds for handwheel operators, or up to four hundred and fifty (450) foot-pounds for two (2) inch nut operators. Actuator mounting brackets for submerged service shall be totally enclosed and shall have gasket seals. All exposed valve nuts, bolts, springs, washers, and the like shall be Type 316 stainless steel.

c) *<u>Isolation Valves</u>*

(1) Materials and Installation

On force mains exceeding five thousand (5,000) feet, isolation valves shall be required to facilitate future repairs.

Acceptable isolation valve manufacturers are M&H and Clow.

All isolation valves shall have electrical operators for valves above twelve (12) inches, manufactured by Rotork.

All isolation valves shall be located inside a standard valve box with a valve marker. The valve marker shall clearly denote "Sanitary Sewer Force Main".

The isolation valve shall be located outside the fenced pump station area, minimum five (5) feet, from the fence.

d) *Air Release/Vacuum Valves*

(1) Materials and Installation

Air release/vacuum valves (combination valves) are to exhaust pockets of air in the force main accumulated during operation of the pump station and to exhaust or admit air during the filling or draining of the force main.

Acceptable automatic air release/vacuum valve manufacturers are APCO and ARI.

Consideration shall be given to using manual air release/vacuum valves in lieu of automatic air release/vacuum valves or providing automatic air release/vacuum valves with flood protection in areas within the one hundred (100) year floodplain or any areas where flooding is anticipated to occur.

Automatic air valves/vacuum valves shall be of the quick-opening, slow-closing type to prevent the development of hydraulic surge conditions.

Automatic air release/vacuum valves shall be provided at all high points to prevent air locking of the force main and at locations along the force main where sub-atmospheric pressures or column separation may occur. The route of the force main shall be such that the number of air release/vacuum valves shall be minimized to the greatest extent possible.

All air release/vacuum valves shall be located inside a concrete vault. The vault shall be appropriately sized for the installation and maintenance of the air release/vacuum valve and shall conform to the specifications presented in Section IV.D.7, except with respect to size. Approved air release/vacuum valve installation is provided in Standard Detail P-018, Appendix M.

13. Pressure Gauge

a) *Materials and Installation*

Pressure gauge sizing shall take into consideration the current discharge pressure, flow ranges, and future capacity of the pump station.

Gauge gradation shall not be more than one hundred and twenty percent (120%) of the maximum pressure anticipated at the pump station.

The pressure gauge tap shall have diaphragm mounted seals.

Pressure gauge face shall be four (4) inches minimum.

Acceptable pressure gauge manufacturer is Endress & Hauser. Acceptable isolation ring manufacturer is Onyx.

Pressure gauges shall be installed within the valve vault. Installation of wafer style isolation ring of the same diameter as the force main piping shall be installed to facilitate the installation of a pressure gauge. The pressure gauge tap with diaphragm mounted seals shall be located on the side of each pipe in the valve vault, see Standard Detail P-014 in Appendix M for placement. Pressure gauge face shall be installed facing up toward to the access hatch; the pressure gauge shall be easily read by looking down into the valve vault. The pressure gauge shall be connected to the telemetry system via the control PLC for off-site monitoring.

14. Flow Meter

a) *Material and Installation*

Meter sizing shall take into consideration the current capacity, flow ranges, and future capacity of the pump station

Acceptable flow meter manufacturers are Endress & Hauser. Flow meters shall be model PROline PROMAG 53 Series for wastewater application.

The electromagnetic induction flow meter shall generate a voltage linearly proportional to flow for full-scale velocity settings from one to 33 ft/second. Standard accuracy shall be +/- 2% of rate and +/- 2% of full-scale output for all meters.

The meters shall meet the following requirements:

1. Connection type: Flanged 150# ANSI
2. Tube Material: 304 SS
3. Liner Material: Polyurethane
4. Electrode Material: Stainless Steel

5. Enclosure Class: NEMA 6P
6. Empty Pipe Detection: Yes
7. Fluid: Wastewater
8. Flow Units: US Gallons (Gallons/Minute)
9. Temp (Max/Norm/Min): -5 to +140 F
10. Electronics Mounting: Remote
11. Remote Distance: 650 feet
12. Type Span Adjustment: touch control/local
13. Power Supply: 110 VAC
14. Transmitter Output: 4-20mA and Pulse
15. Transmitter Digital Communication: Profibus
16. Aux. Input: Status input available for totalizer reset
17. Display: 4 line backlit with 16 digit LCD

The flow meter shall be capable of measuring flow bi-directionally. The flow meter shall be totalizer capable for forward, backwards, and net (forward and backward) flow. The flow meter shall be capable of displaying instantaneous flow rate, as well as, net totalizer value locally on its output screen. The flow meter shall provide local operator HMI for configuration of parameters and reading of data not normally displayed of its screen.

A properly sized magnetic flow meter shall be installed on the force main inside the valve and meter vault.

A bypass around the flow meter shall be provided for use during meter maintenance and repair. Two (2) isolation valves shall be installed for complete isolation of the flow meter from the system; one (1) on each side of the flow meter. Flow meters shall have an adequate straight run of pipe both upstream and downstream of the meter in accordance with the manufacturer's recommendations. Force main shall be straight a distance equal to five (5) times the nominal pipe diameter before and after the flow meter. Follow the manufacture's recommendation for proper installation.

The flow meter shall be connected to the telemetry system via the control PLC for off-site monitoring.

15. Electrical Power and Distribution

a) *Electrical and Control Enclosure Pad*

Electrical and control panel slab shall extend three inches above the pump station slab.

b) *General Electrical System Requirements*

(1) Electrical systems for pump stations shall be designed and installed in strict conformance with NFPA 70 "National Electric Code", NFPA 820

"Standard for Fire Protection in Wastewater Treatment and Collection Facilities", ANSI, as well as all applicable federal, state, and local codes. Underground and above ground power service installation is presented in Standard Detail P-002 and P-003, respectively, in Appendix M.

(2) Each pump and motor unit shall be provided with a separate electrical supply, motor starter, alarm sensors, as well as electrical and instrumentation/control systems and components.

1. Electrical and instrumentation/control systems and components shall be located such that they may be disconnected from outside the wet well.
2. Cables and conduits shall be provided with seals that are both water-tight and gas-tight, shall be protected from corrosion, and shall allow separate strain relief.

(3) The main power feed to all pump stations shall be equipped with an above-grade, fused disconnect switch. They shall:

1. Be of a type that can be locked in the on or off position.
2. The switch shall be U.L. listed for service entrance.
3. The enclosure shall be stainless steel and have a lockable cover.
4. The switch must be mounted inside the fenced area of the station.

(4) Developer shall supply a fire extinguisher in a weather guard enclosure.

(5) The incoming electrical service shall have surge protection sized according to size of service. The surge suppressor shall have the following characteristics:

1. The surge suppressor shall be in a NEMA 4X Stainless Steel enclosure and shall provide line-to-line, line-to-neutral, line-to-ground, and neutral-to-ground protection modes as applicable for the power service.
2. The surge suppressor shall be provided with a disconnect. Minimum surge current rating shall be 100-KA per mode, 200-KA per phase per NEMA LS-1. The surge suppression system shall be duty cycle tested to survive 20-KV, 10-KA, IEEE C62.41 category surge current with less than five percent (5%) degradation of clamping voltage. The surge suppressor shall have minimum repetitive surge capacity of two thousand five hundred (2,500) impulses per mode and five thousand (5,000) impulses per phase. Status indicating lights and form "C" dry alarm contacts shall be provided.

3. The surge suppressor shall be U.L. listed and labeled under UL1449 and UL1283.

(6) Prior to any pump station approval, the appropriate power company must notify the DCDWM, Polebridge Wastewater Treatment Facility when 3-phase power and voltage is available to the site. In the event that 3-phase power is not readily available to the site, the Developer/Contractor may be permitted to utilize a phase converter upon submittal of a letter from the power company stating that the cost to install three (3) phase service is in excess of seven thousand dollars ($7,000). Approval for use of a phase converter will be granted by DCDWM based on the specific site conditions. Single-phase motors will not be allowed.

c) *Pump Station Controls Electrical Requirements*

The Developer/Contractor will furnish and install one and one-quarter (1-¼) inch conduit connecting the pump station control panel to the generator transfer switch and to the generator control panel. The Developer/Contractor will install two (2) ten (10) conductor shielded cables in the one and one-quarter (1-¼) inch conduit to the generator, and one (1) ten (10) conductor shielded cable in the one and one-quarter (1-¼) inch conduit to the transfer switch. The ten (10) conductor cables will be installed with eight (8) feet of slack in the pump station control panel, and four (4) feet of slack in the generator and transfer switch panels.

d) *Electrical Grounding System*

A grounding system shall be installed as per the National Electrical Code, local codes, and ordinances. An underground perimeter cable grounding system shall be installed with connections to at least the following equipment:

a. Wet well cover
b. Vault cover
c. Control panel mounting rack
d. Main disconnect switch
e. Pump station fence

Bare copper wire (#4) is to be connected to the wet well cover and the valve and meter vault cover by way of an approved mechanical connection. Wire (#4) shall also be poured into top slab of the wet well and the valve and meter vault at the foundry with a twelve (12) inch stub-out for field connection. Under no circumstances shall wire be allowed to run across the outside top slabs.

16. Generator

a) *General Requirements*

(1) All pump stations are required to have continuous standby power. The pump station shall be connected to an automatically-activated stand-by power generation source with automatic reset.

(2) The only acceptable standby power generator manufacturer: Cummins/ Onan.

(3) A one (1) year (from the date of commissioning) comprehensive warranty shall be provided by the manufacturer to include parts and labor.

(4) Generators shall meet all new EPA air emission Standards related to them.

(5) Generators shall be supplied with all auxiliary systems necessary for operation (i.e. batteries, battery charger, block heater, etc.)

(6) Generators shall be properly grounded.

(7) All generators are to be installed to operate on natural gas if available. If gas is unavailable, a letter of exception must be obtained from DCDWM.

(8) All generators shall be equipped with the quiet run package.

(9) Generators shall be capable of powering the pump motors' starting current, electrical systems, instrumentation/controls and alarm systems, and other auxiliary equipment as may be necessary to provide for the safe and effective operation of the pump station.

1. Generators shall have the appropriate power rating to start and continuously operate under all connected loads.

2. Generators shall be provided with special sequencing controls to delay lead and lag pump starts. Pumps shall start with a minimum 15-second lag time. Simultaneous starting of two pumps shall be prevented.

3. A connection shall be provided so that the generator can power an external, portable load bank for maintenance purposes.

(10) Generators shall be protected from operating conditions that would result in damage.

1. Generators shall be capable of shutting down and activating the audible and visual alarms and telemetry if a damaging operating condition develops.

2. Individual dry contacts must be provided at the generator via optional Onan relay output board to be used for connection to the PLC. Contacts must be provided to remotely indicate the following:

a. generator running
b. generator fault
c. generator warning
d. low fuel level
e. overrun condition
f. high engine temp
g. low engine temp
h. low coolant
i. low oil pressure
j. fuel tank rupture basin alarm
k. not in auto

3. Generators shall be protected from damage when restoration of the power supply occurs.
4. Outdoor weather-protective housing with critical grade muffler shall be installed and located within the housing. The generating unit shall be adequately ventilated. The housing shall have hinged side access doors and a rear control door. All doors shall be lockable. All sheet metal shall be primed for corrosion protection and finish painted with the manufacturer's standard color. Vibration isolators as recommended by the generator set manufacturer shall be provided.

(11) Four complete sets of operation and maintenance manuals are to be provided to DCDWM for the generator and automatic transfer switch.

(12) The generator is to be load tested at one hundred percent (100%) full load on site for a period of four (4) hours.

(13) Generators shall be placed on a reinforced concrete pad to be designed by the Design Engineer based on the specific generator selected. The generator pad is depicted in Standard Detail P-009, in Appendix M.

b) *Automatic Transfer Switch*

(1) The standby power system shall include an automatic transfer switch to automatically start the generator in the event of loss of any phase of power, reverse power, or low voltage brownout. The stand by power transfer switch shall not engage until after thirty (30) seconds of continuous power loss, or low voltage, occurs.

(2) Automatic transfer switch shall be rate for 100% of full load. The transfer switch shall be provided with indicators for all phases of operation and be equipped with a full programmable timer for exercising the equipment.

(3) The automatic transfer switch shall be configured to switch back when power is restored to the pump station.

(4) Automatic transfer switches shall be in a NEMA 4X Stainless Steel enclosure. Acceptable Transfer Switch manufacturers are Onan or ASCO. Individual dry contacts must be provided at the transfer switch via optional Onan relay output board to be used for connection to the programmable logic controller (PLC). A schematic depicting the transfer switch and generator run alarm is provided in Standard Detail P-022, Appendix M. Contacts must be provided to remotely indicate the following:

a. Source 1 available
b. Source 1 connected
c. Source 2 available
d. Source 2 connected
e. Transfer switch Normal position
f. Transfer switch Emergency position
g. AC Line failure
h. High battery voltage
i. Low battery voltage

17. Telemetry

Every pump station must be equipped with a telemetry system. The telemetry equipment shall be provided and installed by the Developer/ Contractor in complete working order. The telemetry system shall contact personnel capable of initiating a response to a pump station alarm condition twenty-four (24) hours per day, three hundred and sixty-five (365) days per year.

All pump stations shall be equipped with Telog Remote Transmitting Unit (RTU) (RTU is also referred to as Remote Telemetry Unit). The RTU shall be furnished and installed by the Developer/Contractor. A schematic of the I/O RTU connections shall be provided and posted on the inside of the enclosure door. RTU connections shall follow the requirements depicted in Standard Details P-020 and P-021, in Appendix M. A legend for electrical acronyms and terms is provided in Standard Detail P-019, Appendix M. RTU unit is to be installed inside its own NEMA 4X Stainless Steel enclosure. Telog Instruments Inc. Sales phone number is (585) 742-3000. RTU must include the following items bundled as the Telog RS-33u-PLC Remote Telemetry Unit package:

1. Telog RTU model number RS-33u or equivalent.
2. Latest version CPU module
3. Multi-Channel Recorder (Remote Data Acquisition) Telog Model No. RS-3314; Mixed I/O: 8AI, 6DI
4. Model No. 1 x RTT Cellular Packet Modem. (800 Mhz)
5. Telog M-323S communication interface module.

6. Telog A-PMA Pole Mount Antenna – Omni directional ¼-wavelength dipole antenna with 3 dB gain from CDMA/1xRTT cellular option. Includes 6.6 feet of coax cable and mounting brackets.
7. Power Source: Model No. AC12B4, AC to 12 Volt DC battery backup and alarm feature when loss of AC power is detected.
8. Battery
9. Door entry switch
10. Keyed door lock

Developer is responsible for complete wiring and programming of the PLC and RTU.

Developer/Contractor shall provide a field Operation and Maintenance Manual for the RTU and Control Equipment.

a) *Human Machine Interface (HMI) Requirements*

MR Systems shall complete required HMI changes. The developer shall assume the cost of these changes.

b) *Relays*

Relays to be included in pump station control/operation:

1. Generator Operation
2. Power Failure
3. Pump One Failure
4. Pump Two Failure
5. High Water Level Alarm
6. Flow Meter Output
7. Low Level Alarm

18. Enclosures

a) *General*

Enclosures for electrical and control components for the pump station shall be located outside of the wet well and in a location such that they are readily accessible, ensure maximum electrical and personnel safety, and are protected from damage due to vehicular traffic and flooding. All electrical and control panels shall be installed at a minimum five (5) feet from the fence; reference Standard Detail P-001 in Appendix M. Electrical and control enclosure example layouts are provided in Standard Detail P-023, 240 V, and Standard Detail P-025, 480V, Appendix M

Switching gear (transfer switch, breakers, etc.) shall be mounted in a panel box of NEMA 4X Stainless Steel rating with a hinged three (3) point latched door with locking handle. Panel is to be set on painted galvanized, aluminum, or stainless steel legs mounted to a concrete base, with conduit stubs to enter at the bottom of

the panel, and to be set in the concrete base for support. Any deviation must have DCDWM approval.

All enclosures as well as all switches and indicator lights, whether mounted on an inner door or face of the enclosure, shall be provided with a label that conforms to U.L. descriptions and procedures.

No conduit runs or junction boxes are to be installed inside or on top of the wet well. Splicing of cables inside the wet well will not be permitted.

All electrical and control panels shall be provided with a four (4) foot awning to allow access during inclement weather. The length of the awning shall be determined by the total length of electrical and control panels. The awning shall be eight (8) feet high. The front side shall be supported by four vertical supports and the back side shall be supported by four vertical supports. Eight (8) inch to ten (10) inch base plates shall be installed on vertical supports.

19. Instrumentation and Controls

a) *Wastewater Level Sensing Equipment*

1. Pump station cycles shall be controlled through the use of wastewater level sensing equipment in the wet well. Wastewater levels within the wet well shall be detected through the use of submersible pressure level transducer and three (3) mercury sealed type float switches. One (1) float switch will be used as a backup high level sensor and two (2) shall act as back-up pump on/off controls.

2. Wastewater level sensing equipment shall be used to indicate the following levels and operate the pump station correspondingly:

   a. Low-level alarm
   b. Pumps-off
   c. Lead pump-on
   d. Lag pump-on
   e. High-level alarm

3. Wastewater level sensing equipment shall be located so as not to be affected by flows entering the wet well or the turbulence created by the suction of the pump. They shall also be installed in an accessible location.

4. If mercury-type float switches are used, the cables shall be of sufficient length to be installed without splicing, plus an additional 10 feet of cable. The additional length of cable shall be coiled and secured within the wet well.

5. Acceptable submersible level sensing equipment manufacturers are Blue Ribbon Corp. or Dwyer Instruments. Acceptable ultrasonic level sensing equipment is Milltronics MultiRanger 200.

b) *Components*

1. All conduit work shall be in accordance with the Electrical Conduit and Accessories Specifications for the DeKalb County Wastewater Treatment and Collection System, provided in Appendix K. A depiction of the control panel cables is provided in Standard Detail P-016, Appendix M.

2. Once wiring is installed, conduits shall be insulated (sealed) at each end; at the wet well and the enclosures. This shall prevent moisture transfer from the wet well into the electrical and control panel enclosures.

3. Conduits shall be Red2hot with PVC coating on the inside throughout the entire length.

4. A phase monitor shall be provided in the pump control panel. The pump operation shall be inhibited when an open phase/phase reversal condition is detected. A contact of the phase monitor shall also be connected to the PLC for monitoring and remote indication of the open phase/phase reversal condition. All control wiring shall be stranded. No solid wire shall be allowed.

5. Control Panel layout to be determined by I&C Specialist, and to be consistent among all new pumping stations. An example front layout of a duplex pump station control panel is provided in Standard Detail P-027, Appendix M.

6. Allen-Bradley Micro Logix Programmable Controller will be used to control and monitor all pump station functions. PLC to be connected to Telog RTU CPU via MODBUS protocol connection. Example pump station control schematics are provided in Standard Detail P-024, 240V, and Standard Detail P-026, 480V, Appendix M. Electrical legend is provided as Standard Detail P-019 in Appendix M.

7. Allen-Bradley PanelView Plus panel mounted human-machine interface (HMI) connected to the PLC will be used to set pump control parameters, and to monitor pump station status. A lockable cover will be provided to protect the HMI from vandals.

8. I/O Input/Output modules will be provided to monitor and control all pump station equipment in accordance with I/O list, see below table “Example I/O List”. Equipment located outside of the pump control panel (generator, transfer switch, flow meter, and pressure gauge) will route telemetry data

to/from the pump station control panel PLC for integration with the telemetry system.

9. The Control Panel shall be equipped with Maid Labs Tehnologies' MLMMD MerMaid Datalogger for the purpose of monitoring and analyzing the condition of the electrical motors. The MLMMD shall be provided with the following additional items and accessories manufactured by Maid Labs Technologies:

   a. MLSOFTV: Volucalc lift station and electric analyzer software
   b. MLPS1: Power Supply 90 VAC to 264 VAC Output 3.3 V 2 A.
   c. MLCTA6: Connector for one (1) three (3) phase motor (for temporary installation).
   d. (2) MLCT05: Mini current sensor of five (5) amps (one (1) for temporary installation and one (1) for permanent installation)
   e. (2) MLCT15: Mini current sensor of fifteen (15) amps (one (1) for temporary installation and one (1) for permanent installation)
   f. (2) MLCT75: Mini current sensor of seventy-five (75) amps (one (1) for temporary installation and one (1) for permanent installation)
   g. MLCT150: Current Clamps 150 amps.
   h. MLPT600Y: Three (3) phase 600 Volt Voltage Tansformer with wires and clamps Y setup.
   i. MLUSB232: USB to RS-232 serial adaptor
   j. Ethernet-Serial RS232 Interface
   k. MLRG1: Rain Gauge NWS Approved
   l. MLCASE1: Aluminum briefcase with molded separators for kit.

10. Pump Soft Starts shall be used for pumps 20 HP, or greater, with piping systems that see a large elevation difference or pressure surge greater than the pipe design pressure when the pump is turned on. This may occur when only one pumping station is providing flow to a force main or if the Pump soft starts are not required for pumps less than 20 HP.

11. All pump control components including PLC, phase monitor, HMI, Soft Starts (for 20 HP and larger) will be installed in a single NEMA 4X Stainless Steel enclosure.

12. Each pump installed at the pump station shall be provided with a "Hand-Off-Auto" selector switch so that the operational mode of the pump may be selected.

13. Each pump installed at the pump station shall have a pump run timer that is capable of keeping a cumulative log of the operational time of each pump. Timers shall be factory installed six (6) digit non-resettable elapsed

time meters to show individual pump running time to the one-tenth ($1/10^{th}$) of an hour.

14. Sufficient indicator lights shall be used to demonstrate the operational status of the pump station. The indication lights shall be specific to the condition detected. At a minimum, indicator lights shall be provided for each pump to indicate a pump-on condition and a pump alarm/failure condition.

15. Sufficient 110-volt electrical receptacles shall be provided to facilitate maintenance at the pump station. If located in an outdoor area, the receptacles shall be of the ground fault interruptible type and shall be protected from the weather elements.

16. Phase converter, when utilized, shall be stationary type Duo Add-A-Phase, manufactured by Ronk Electrical Industries, distributed by IMS, Mayer Electric, Hughes Supply, and Rexel Southern Supply.

Example I/O List

Pressure Transducer	Electromagnetic Flow Meter	Generator	Transfer Switch	Submersible Pumps
Pressure Signal	Flow analog Signal	Fuel Leak Warning	Source One Available	High Level Alarm
	Totalizer Reset	Generator Running Status	Source One Connected	Low Level Alarm
	Totalizer Pulse Output Signal	Generator Summary Fault	Source Two Available	Seal Failure Each Pump
		Switch Not In Auto Warning	Source Two Connected	Motor Over Tamp Each Pump
		Low Fuel Level Warning	Transfer Switch Normal Position	Pump Running Each Pump
		Overspeed Shutdown Fault	Transfer Switch Emergency Position	Not In Auto Each Pump
		Pre High Engine Temperature	AC line Failure	Wet Well Level Signal
		Low Engine Temperature Fault	High Battery Voltage	Control Panel Phase Monitor
		Low coolant Level Warning	Low Battery Voltage	Control Panel Surge Suppressor Status
		Pre Low Oil Pressure Warning		Soft Starters Each Pump (*)
		Pre High Engine Temp Warning		
		Overcrank Shutdown Fault		
		High Engine Temp Fault		
		Low Oil Pressure Fault		
		Customer Fault 1		
		Customer Fault 2		
		Generator Summary Fault		

(*) Soft Starters may be required for 20 HP and greater pumps only.

c) *Control Panel Wiring*

All power wire shall be stranded copper and sized as required for load and application according to the National Electric Code (NEC). Electrical work shall be in accordance with the latest edition of the NEC and subject to all codes. All control and signal wire shall be a minimum of #16AWG, 90 degree insulated and color-coded. Colors shall be red for all AC control, blue for all DC source voltage, gray for all DC return, orange for all DC control, yellow for external source control, white for AC neutral, and green for equipment ground wiring. All wiring on the rear of the inner door shall be neatly bundled using tie wraps or other means. All internal wiring on the backplate shall be neatly routed in wire duct with removable covers. All wiring shall be continuous point-to-point (no splices) and be totally accessible with permanent number marking on each end to match the control schematic drawings.

E. Construction Oversight

1. General

When calling for an inspection, state whether it is preliminary, final, or other specific type of inspection. No approval of a project will be granted by the DCDWM until all inspections are conducted, all defects addressed, and all appropriate documents have been received and accepted. Letters of preliminary and final inspection/approvals will be sent to developers and/or contractors by the DCDWM and placed in Department files.

Jobsites shall be landscaped to an equal or satisfactory condition as presented prior to start of construction activities. Any damage to the existing system occurring during construction activities shall be promptly reported to the proper authorities so that proper action may be taken.

Inspections shall be as described in Section IV.A and IV.B for pumping station approval and acceptance.

F. Testing

1. Pressure and Leakage Testing

Force mains shall be subject to a test pressure equal to 150% of the total dynamic head for a minimum of two hours. The test shall be performed using potable water. No leakage will be allowed. The entire test must be witnessed and approved by the DCDWM representative. To schedule a test the Developer/Contractor shall notify the DCDWM inspector a minimum of 48 hours in advance at (770) 621-7200.

The Developer/Contractor shall remove, valve off, or otherwise protect any equipment that might be damaged by the pressures used in the test. Pipe laid in trenches shall be back filled. Joints, fittings, and valves may be left exposed to be

examined during the test. Before applying the test pressure, all air shall be expelled from the pipe.

If combination air release valves are not available at high points, the Developer/Contractor shall make necessary taps and insert plugs after the test has been completed. Prior approval must be obtained from DeKalb County before making the taps.

The DCDWM inspector's approval of the force main shall become a part of the overall pump station and force main system approval. The Developer/Contractor shall bear the complete cost of the pressure test including temporary plugging and blocking, and the repair of all leaks.

A copy of the Pressure Test Form is provided in Appendix G.

2. Industrial Wastewater Sampling

A sampling point shall be provided upstream of the industrial wastewater discharge into the pumping station. It is recommended that sampling be performed at a manhole upstream of the discharge.

Prior to the acceptance of any industrial wastewater discharge into the DCDWM collection system a water quality report shall be submitted to DCDWM.

G. Final Approval

1. General

Final pump station approval and acceptance shall follow the requirements set in Section IV.A.5 of these Design Standards. Final pump station approval and acceptance submittals shall follow the requirements set in Section IV.B.4 of these Design Standards.

2. Force Main Construction Completion Form

Contractor/Developer is to send inspector force main acceptance reports to DCDWM, 1580 Roadhaven Drive, Stone Mountain, Georgia 30083. DCDWM shall send the "Construction Completion Form" once the as-built drawings are approved. Contractor/Developer must submit a completed "Construction Completion Form" to DCDWM prior to final plat approval. A copy of the form is provided in Appendix G.

3. Record Drawings

Record drawings (as-builts) must be submitted to DCDWM before a project can receive final approval, and/or Certificates of Occupancy. (NOTE: In order to avoid delays in the "approval process" of developments/subdivisions, as-built drawings should be submitted as soon as the pumping station and/or force main installations are complete to allow sufficient time for review).

Record drawings must be sharp, clear, clean, legible, and submitted on 24”x36” plain paper and the electronic MicroStation V8 files shall be submitted on CD, or DVD.

Record drawings shall include a site plan and any supplemental or shop drawings as may be required by DCDWM.

One (1) complete set of record drawings and one (1) copy of the electronic files must be submitted by the Developer/Contractor or Developer/Contractor’s Engineer to DCDWM for review and approval.

Record drawings must be stamped and signed by a Professional Engineer or Registered Land Surveyor licensed in the State of Georgia.

4. Guarantee of Work

The Contractor shall provide a one (1) year comprehensive guarantee of work from the date of commissioning of the pumping station. Should settling occur during the warranty period, Contractor shall promptly furnish and place fill to the original grade and restore any damaged landscaping. Should any leaks or settlement occur under new pavement, the Contractor will be held responsible for the cost of all repairs, including pavement replacement.

The determination of the requirement for the Contractor to perform work under this guarantee shall be at the sole discretion of DCDWM.

If a project requires a series of pump stations, the guarantee of work period for all stations shall extend until the guarantee period for the last pump station expires.

APPENDIX A

GENERAL: REFERENCE MATERIAL

Flow Chart: Review and Approval Process for Potable Water and Gravity Sewer Systems
DeKalb County Department of Watershed Management

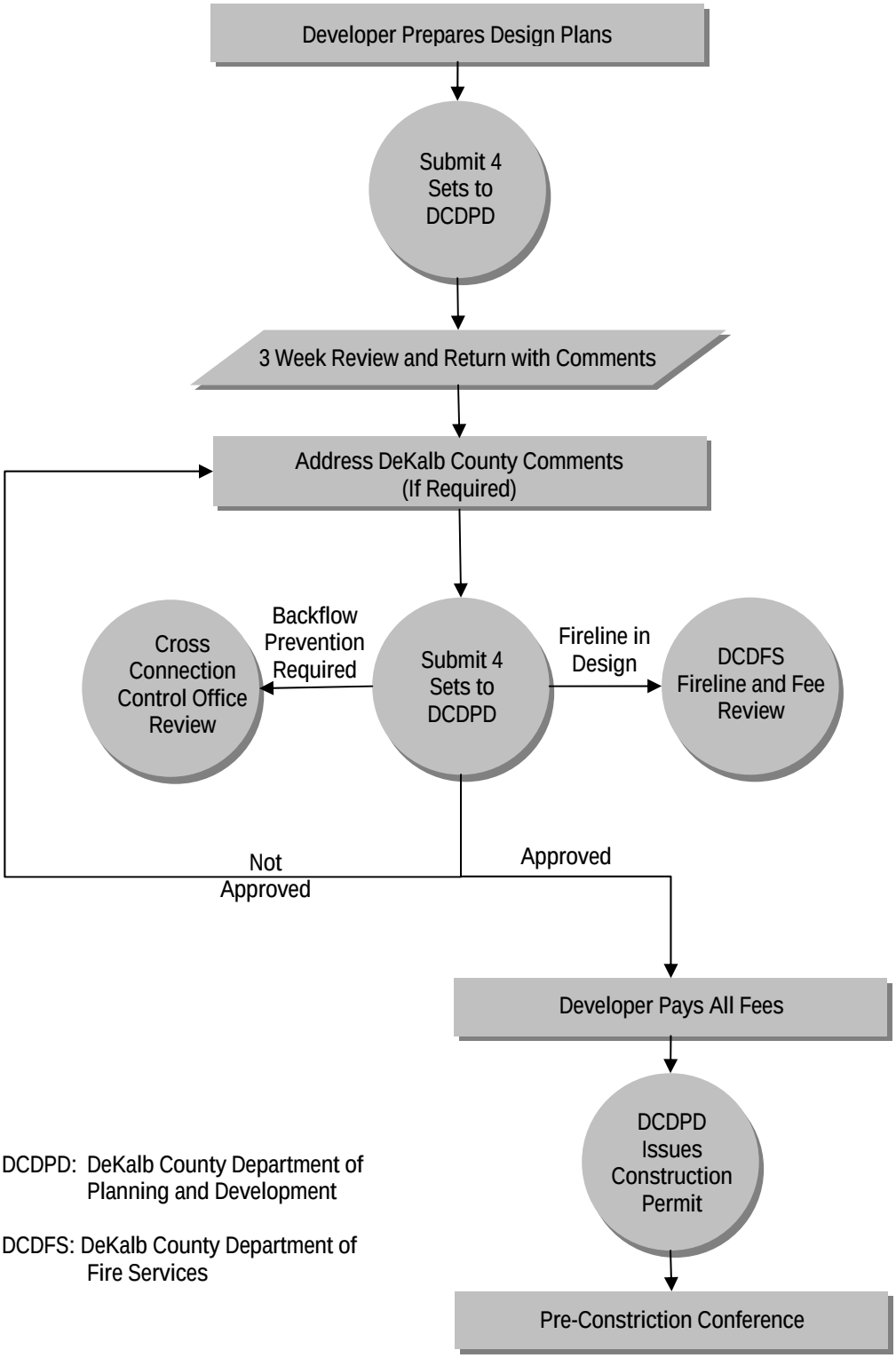

DCDPD: DeKalb County Department of Planning and Development

DCDFS: DeKalb County Department of Fire Services

Flow Chart: Review and Approval Process for Sanitary Pumping Stations and Force Mains
DeKalb County Department of Watershed Management

DCDPD: DeKalb County Department of Planning and Development
DCDWM: DeKalb County Department of Watershed Management

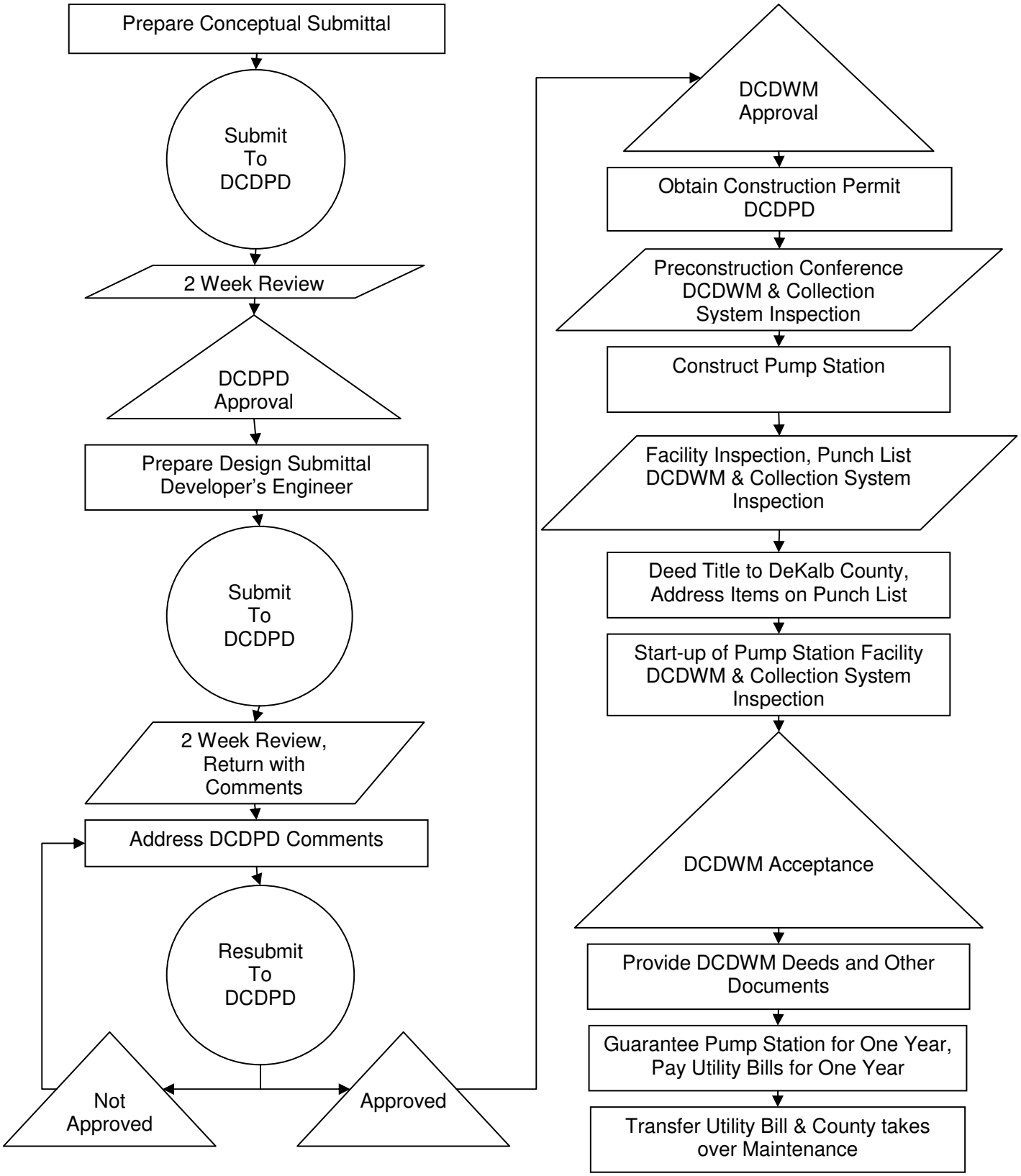

APPENDIX B

POTABLE WATER STANDARD: REFERENCE MATERIAL

Water Distribution System Design Plan Checklist

The Engineer is referred to the DeKalb County Department of Watershed Management "Potable Water Main, Gravity Sanitary Sewer, and Sanitary Sewer Pumping Station and Force Main Design Standards" for general information on the preparation of water distribution systems.

This checklist is intended to be a guide in preparing Water Distribution System Plans. This checklist is not all encompassing. It is left to the Engineer's discretion to decide what additional information may be needed to complete the plans.

ALL SHEETS

- ☐ Final plans shall be on 24"x36" paper sheets.
- ☐ Each sheet except the cover sheet shall have a title block in the lower right corner containing:
  - ☐ Project name,
  - ☐ Project number (if DeKalb County project),
  - ☐ Sheet number,
  - ☐ Total number of sheets,
  - ☐ Scale,
  - ☐ Drawer's, Designer's and Checker's initials and date,
  - ☐ Date (month/day/year)
- ☐ All sheets shall be sealed, signed and dated by a Licensed Civil Engineer in State of Georgia.

COVER SHEET

The Engineer shall provide a cover sheet with the following information:

- ☐ Project name,
- ☐ Drawing Index which provides sheet number and description of corresponding sheet.
- ☐ Vicinity map
- ☐ District and Land Lot number
- ☐ Engineering firm's name, address and telephone number
- ☐ Developer's name, address and telephone number
- ☐ Date (month/day/year)
- ☐ Signature Approval Blocks

SHEET 2

The Engineer shall provide a general sheet containing the following information:

- ☐ General notes covering important parameters as outlined in the DeKalb County Design Standards for Water, Sanitary Sewer, and Sanitary Sewer Pump Stations.
- ☐ Other notes as necessary to cover situations **not** covered by the Design Standards or by the County Standard Details.
- ☐ Legend showing symbols and line types used within the drawings
- ☐ Engineering firm's title block containing firm's name, address, and phone number.
- ☐ Elevation datum and benchmark information in Georgia State Plane Coordinates.
- ☐ Note to be shown on plan: **Contractor shall notify DeKalb County Department of Watershed Management Inspector at 770-621-7212 48 hours prior to start of construction.**

PLAN & PROFILE SHEETS

- ☐ Plan view shall show proper scale. Scale shall not be more than:

  Plan: 1 inch = 50 feet

  Profile: Horizontal – 1 inch = 50 feet

  Vertical – 1 inch = 10 feet

- ☐ Plan view shall show the following:
  - ☐ All streets, alleys and easements. They shall be dimensioned at least once and at breaks. Streets shall be identified by name.
  - ☐ All abutting lots shall be identified by lot number, tract and subdivision.
  - ☐ All topography within and to at least five (5) feet beyond easements and topography affected by construction shall be shown.
  - ☐ Location of all above and underground utilities, including storm and sanitary sewers, dry wells, buried telephone lines, natural gas, power, and cables. Existing utilities shall be shown as dashed lines or faded lines with type, size, and other available information called out.
  - ☐ All structures, paving, and other topographic features within vicinity, such as trees, shall be shown and identified by name, size and type.
  - ☐ Location of proposed fittings and appurtenances such as fire hydrants, valves, meters, etc., shall be shown and identified by name, size, and type.

- ☐ Location of all existing and proposed easements.
- ☐ Location of all existing benchmarks shall be shown and identified by type.
- ☐ Location of all connections to existing waterlines with fittings clearly labeled and method of connection specified.
- ☐ Show bearings, curve information and stationing.
- ☐ Meter service connection shall be either stationed or dimensioned from property line. Also, provide offset dimension from the stationed centerline.
- ☐ Location of soil boring holes.
- ☐ A chlorination tap shown on the plans approximate three (3) to five (5) feet from the beginning of the project or as close as possible to the tap valve or connection points.
- ☐ All sheets shall have a north arrow orienting the plan view.

☐ Profile view shall show the following:

- ☐ Profiles are not required for water mains smaller than the sixteen (16) inches in diameter unless specifically required by DCDWM.
- ☐ Profiles are required for all water mains equal or greater than sixteen (16) inches in diameter.
- ☐ Profiles are required for all water mains crossing stream bed or Georgia Department of Transportation right of way.
- ☐ Existing utilities which cross the proposed utility. Identify crossing utility by name, size, type of piping, location (station) and elevation. Location and elevation are to be obtained from "as-built" plans paying particular attention to any differences in datum.

NOTE*: All existing underground utilities shown on profile are assumed to be shown in approximate location only.*

- ☐ Show proposed and existing grade line.
- ☐ All appurtenances such as valves, vaults, fittings and restraints. Identify by name, size, type, station and elevation.

☐ All sheets shall show match lines labeled as such with station and sheet number.

☐ Proposed water lines shall be shown as solid lines with sizes, material, and pipe classes called out. For example: 8 inch DIP (Water Main) – Class 51.

DETAIL SHEETS

- ☐ Include DeKalb County Standard Details to be used on the project.
- ☐ Include any other details specific to the project that are not covered by DeKalb County Standard Details.
- ☐ Detail sheets shall be located at the end of the plan set and referenced where used.

FIRELINE SUBMITTAL

- ☐ Four (4) sets submitted to DeKalb County Development and Planning Department, including the following information:
  - ☐ Name, address, and phone number of the developer or owner.
  - ☐ Name of entity or person responsible for costs relating to fire line installation along with the name, address and phone number of the local twenty-four hour contact person.
  - ☐ District and land lot of project.
  - ☐ Scale of drawing; include a graphic scale.
  - ☐ Name and address of project.
  - ☐ Street name, existing water main location, material and size of the water main.
  - ☐ Size of fire line and total linear foot for each size of line and location.
  - ☐ Size and location of water meter, if required. (Water meter must be purchased so installation will coincide with installation of fire line.)
- ☐ Plan approval by Fire Marshall's office.
- ☐ Note to be shown on plan: **Contact DCDWM, at (770)724-1411 (forty eight) 48 hours prior to any fire line work commencement on the project.**

APPENDIX C

DIGITAL FILE AND CADD REQUIREMENTS

DCDWM: Digital File Format Requirements

1. Format

Project is to be submitted as a Microstation V8 or later .DGN file format, on CD. No solid fill is to be used in .DXF file, as this attribute is lost during the translation. Instead, hatching or patterning may be used. Drawings are to be presented in the Georgia State Plane Coordinate System; the global shift for DeKalb County is listed in the "DeKalb County Department of Watershed Management CADD Standards for Digital Deliverables" in this Appendix.

2. Levels or Layers

A list of utilized levels or layers, and designation of which items are located on each level will be required. A minimum of eleven (11) levels will be required. See table below. Logical grouping of related items under the same level is acceptable, i.e., property lines, land lot lines, and district lines.

Feature	Level	Color	Style	Weight
Water Mains	54	1	0	0
Water Main Reducers	54	1	0	0
Water Main Plugs	54	1	0	0
Water Valves	48	3	0	0
Fire Hydrants	49	1	0	0
Water Manhole	54	0	0	0
Water Meters	54	1	0	0
Water Vaults	54	0	0	0
Sanitary Sewer Manhole	61	0	0	1
Sanitary Sewer Main	63	2	0	0
Storm Drain Structures	57	0	0	1
Edge of Pavement	51	0	1	0
Natural Gas Line	62	8	1	0
Right of Way Marker	51	0	0	0
Sidewalk Line	51	0	2	0
Utility Pole	62	0	0	1
Power Manhole	50	0	0	1
Telephone Manhole	59	0	0	1
Property Pin (IPF)	51	3	0	0
Other	36	0	0	1

3. Cells or Blocks

A listing of all cells or blocks and their names is required.

DEKALB COUNTY DEPARTMENT OF WATERSHED MANAGEMENT

CADD STANDARDS FOR DIGITAL DELIVERABLES

WATER MAINS

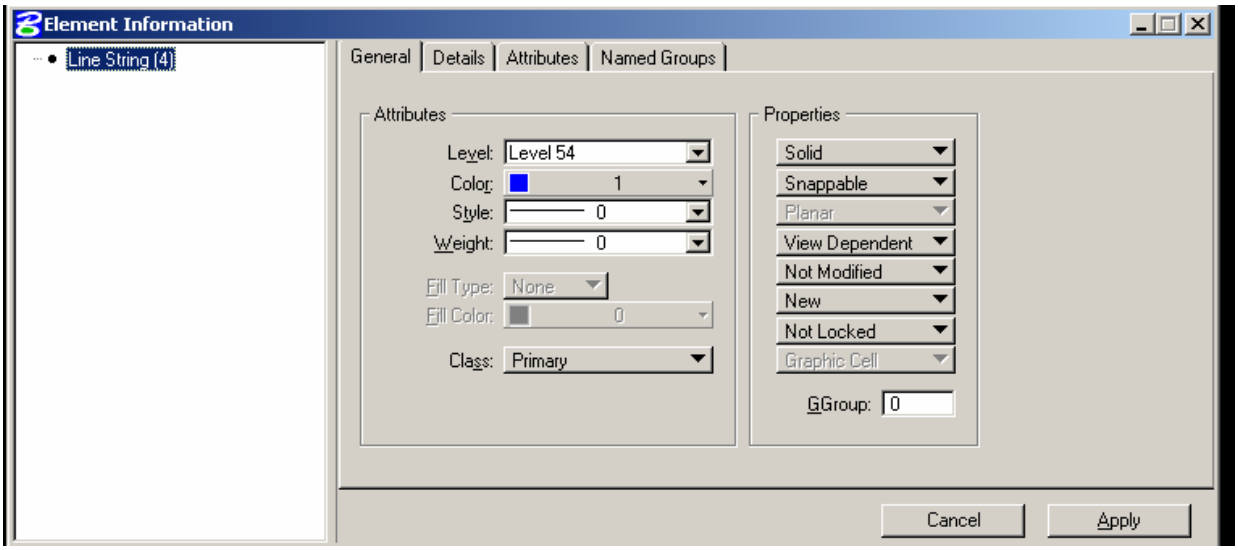

WATER MAIN REDUCERS

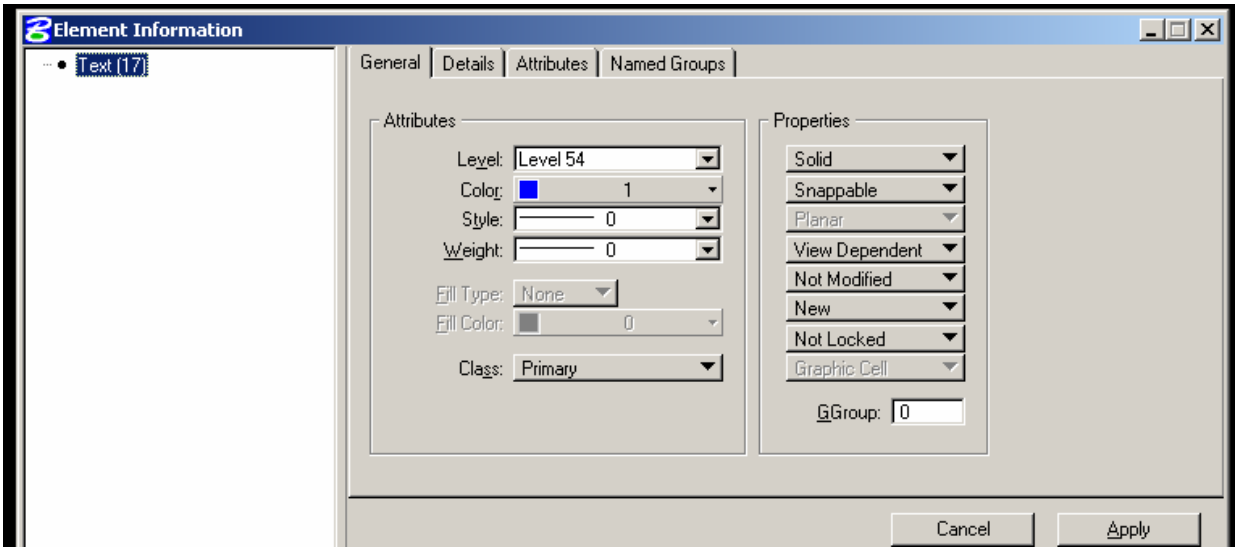

WATER MAIN PLUGS

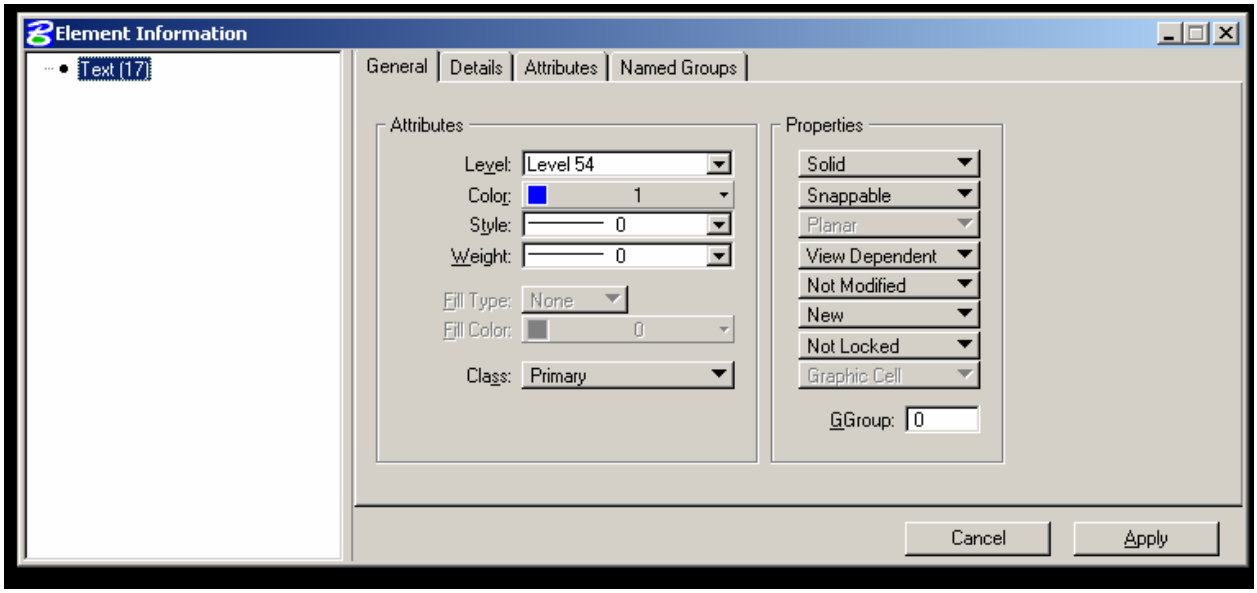

WATER VALVES

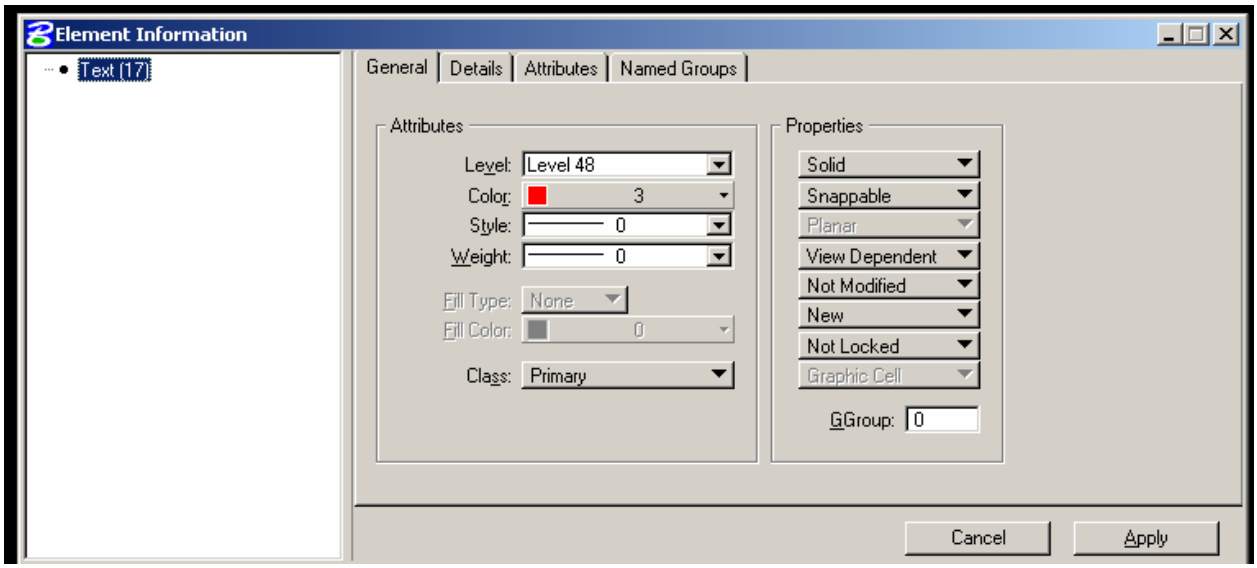

FIRE HYDRANTS

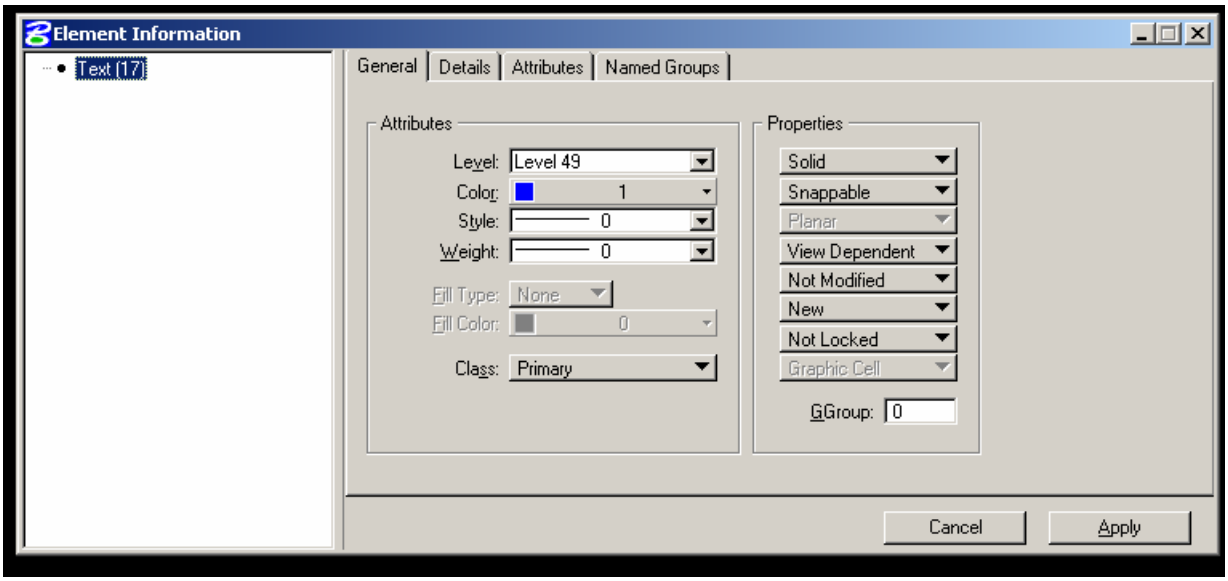

WATER MANHOLE

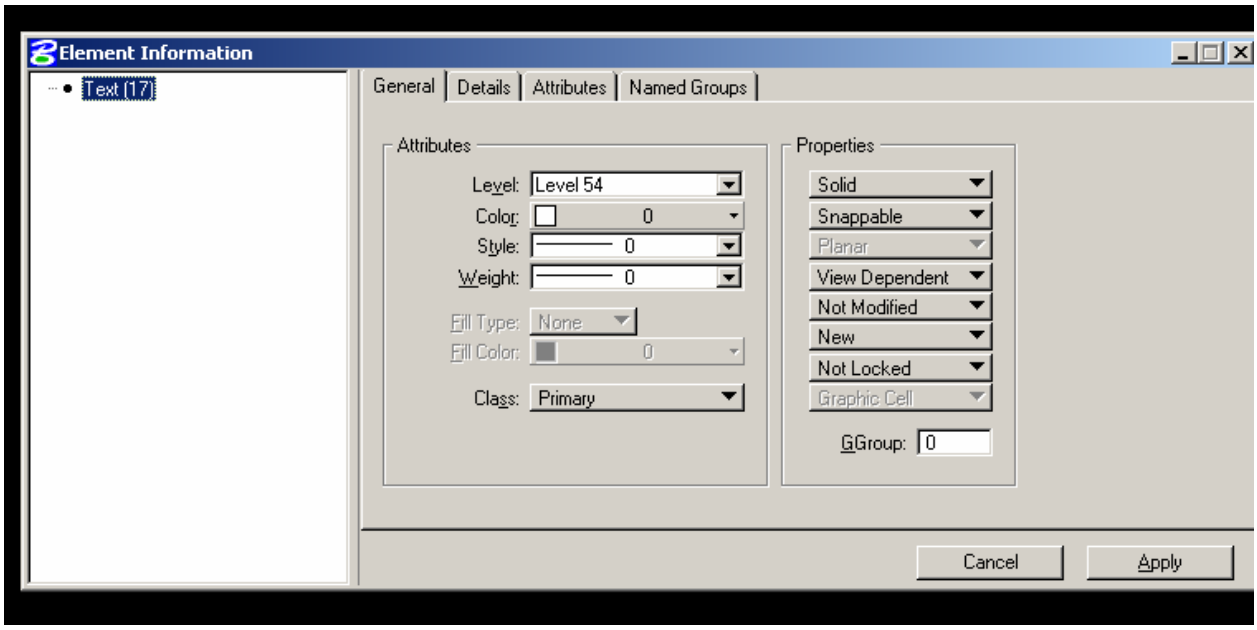

WATER METERS

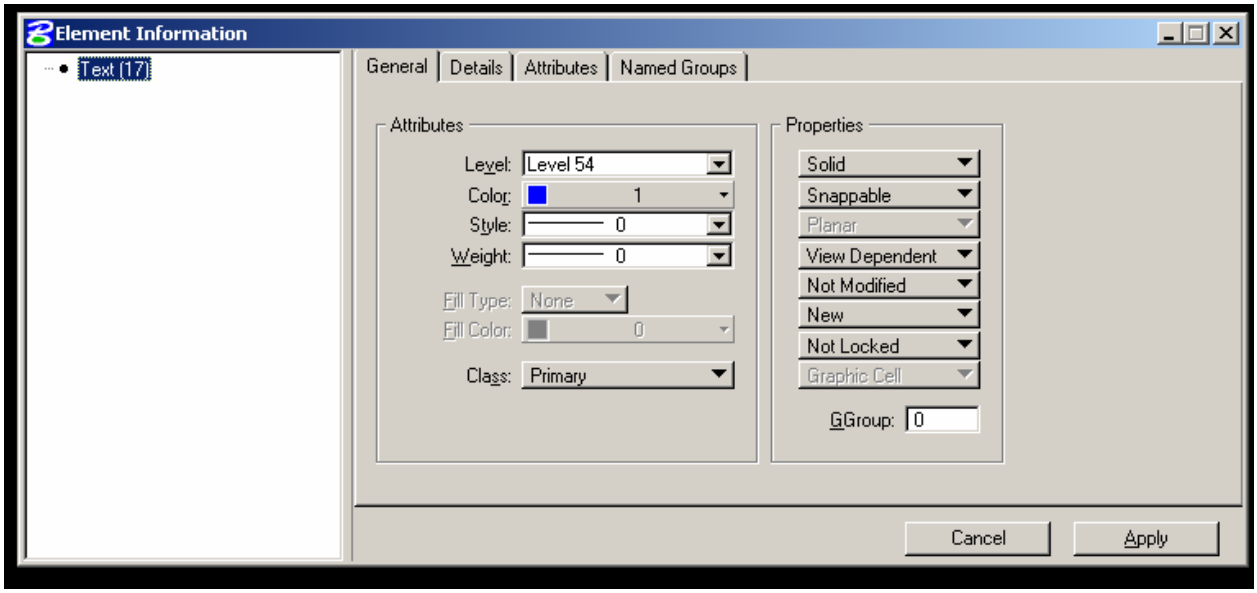

WATER VAULTS

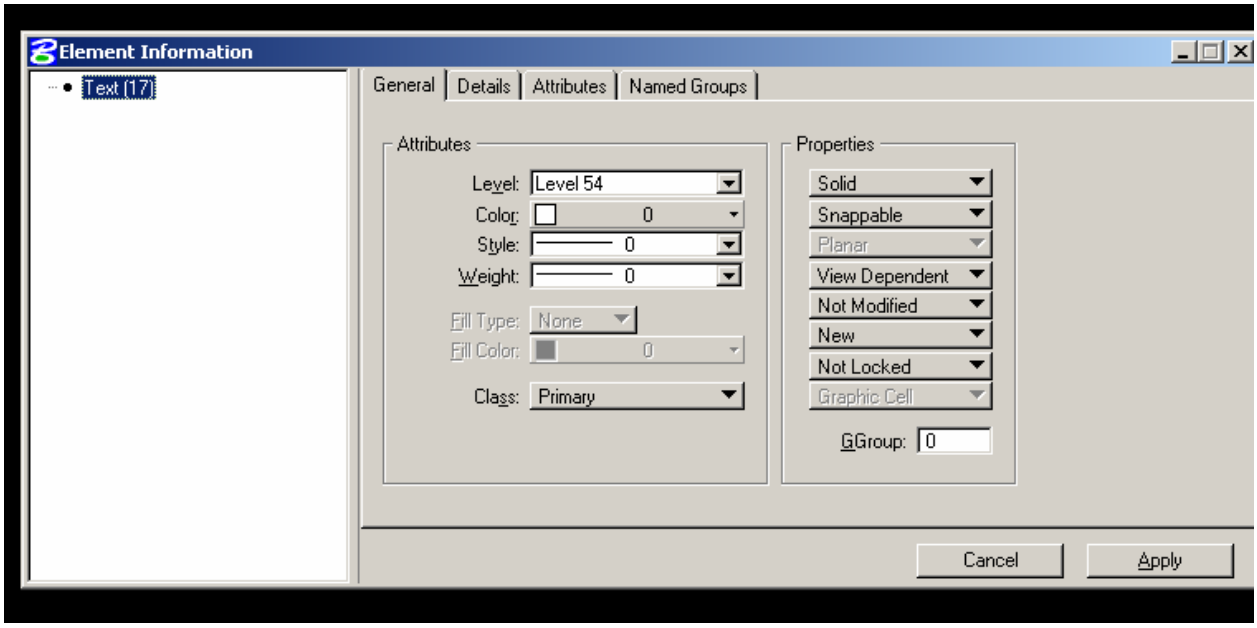

SANITARY SEWER MANHOLE

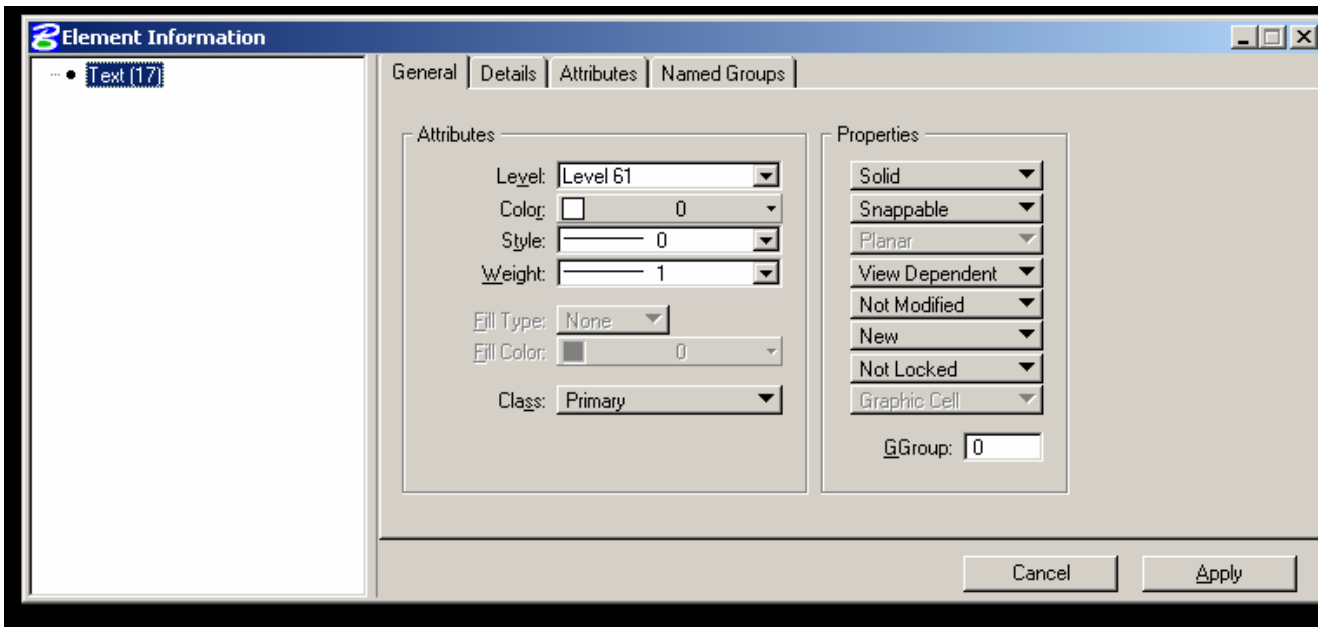

SANITARY SEWER MAIN

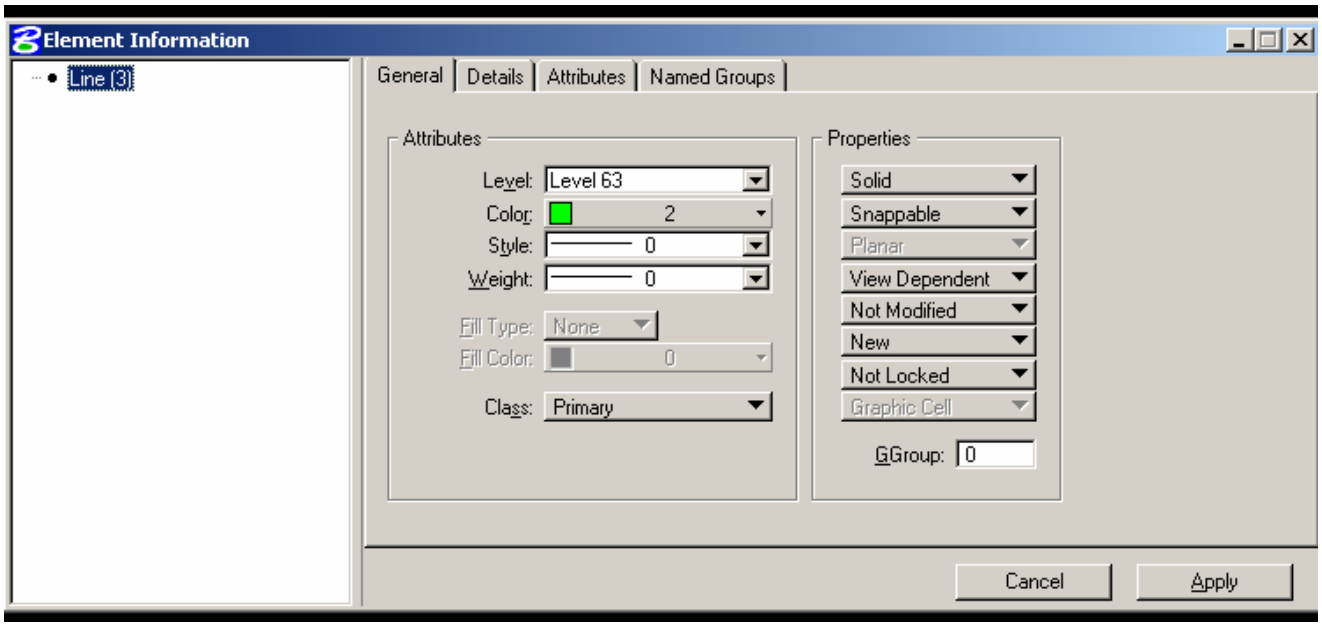

ALL STORM DRAINAGE STRUCTURES
CATCH BASINS, STORM GRATES, STORM MANHOLES

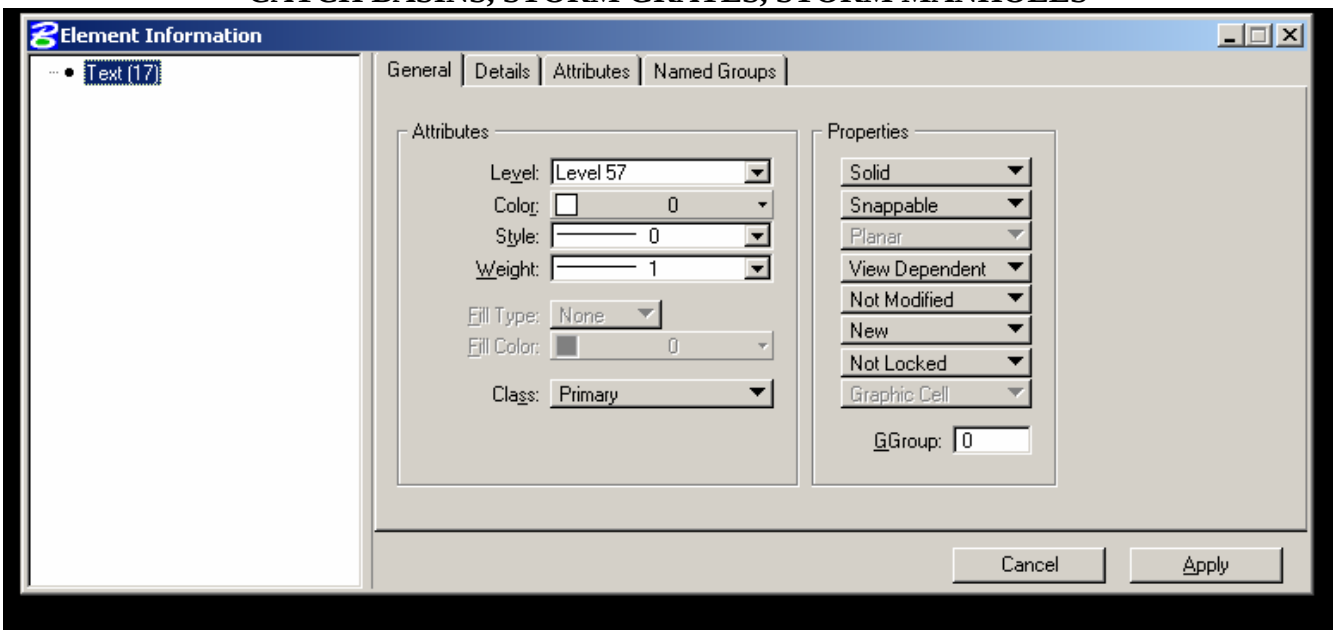

EDGE OF PAVEMENT

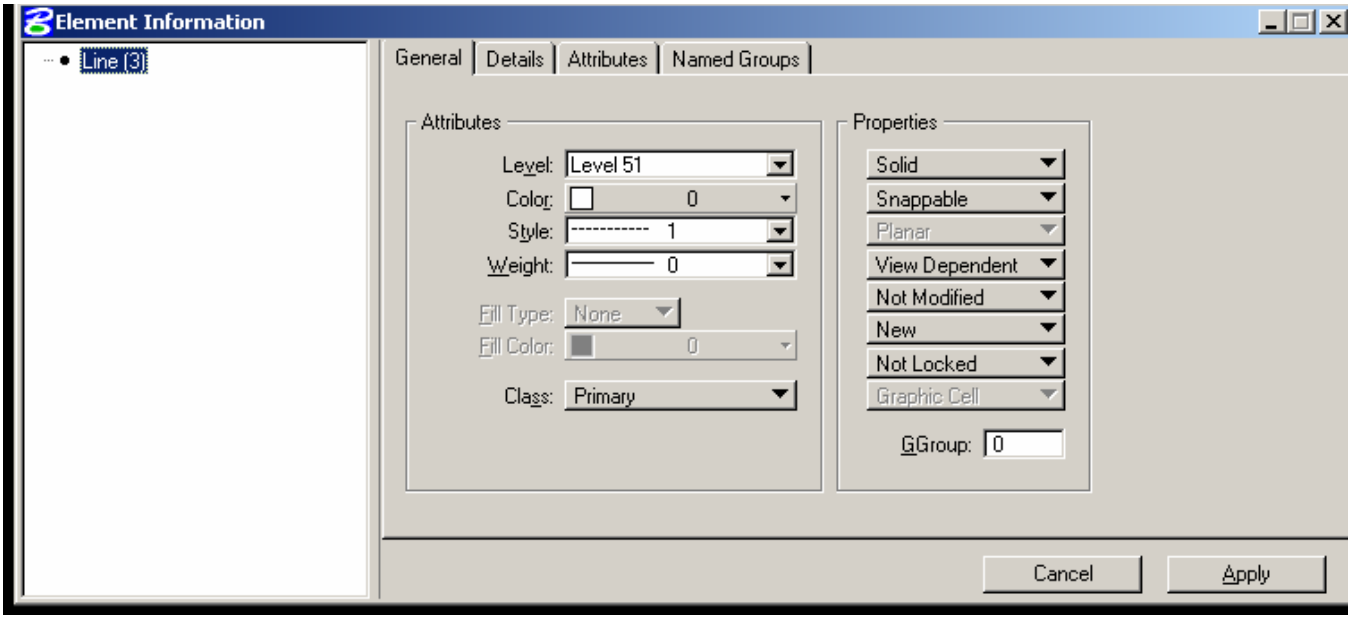

NATURAL GAS LINE

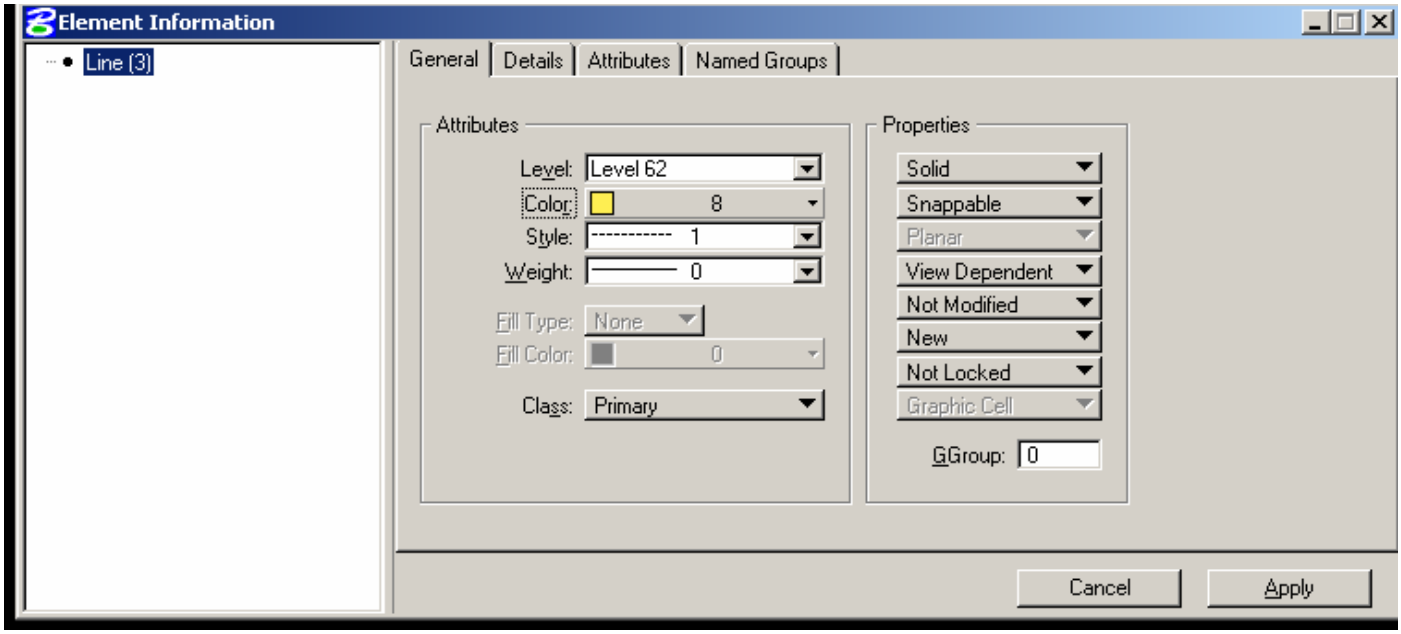

RIGHT OF WAY MARKER

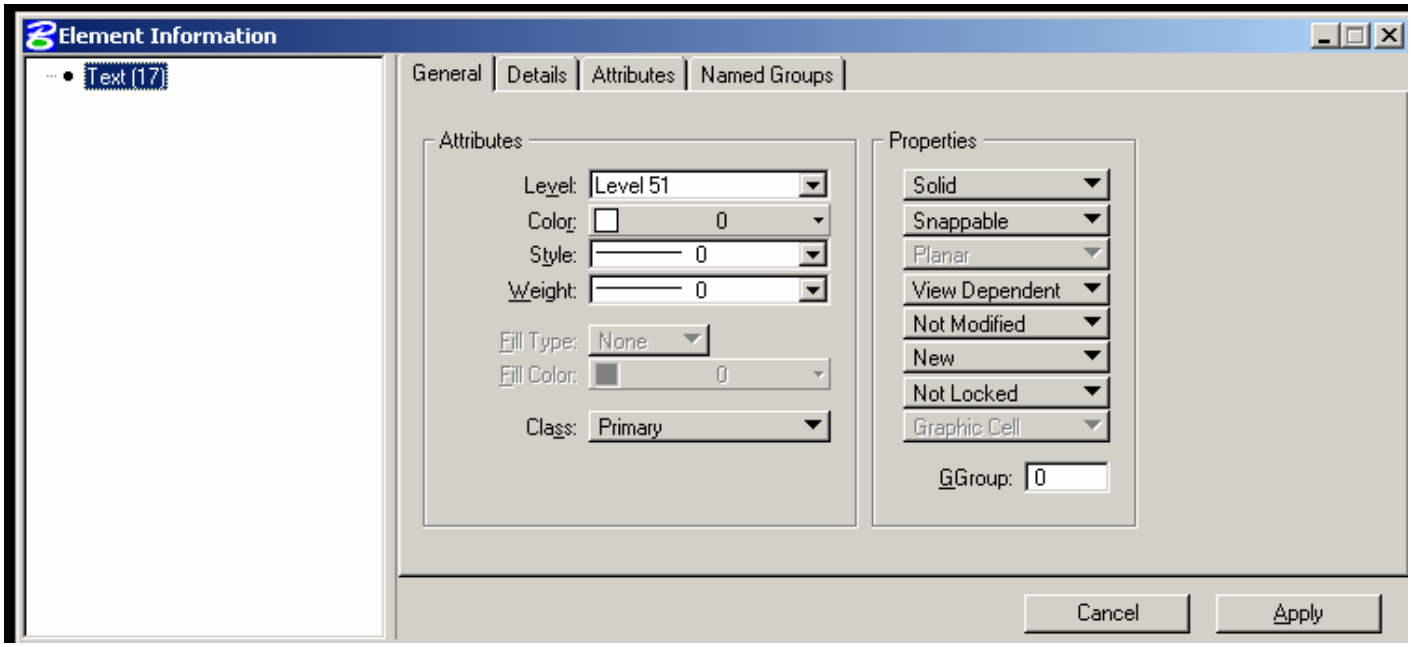

SIDEWALK LINE

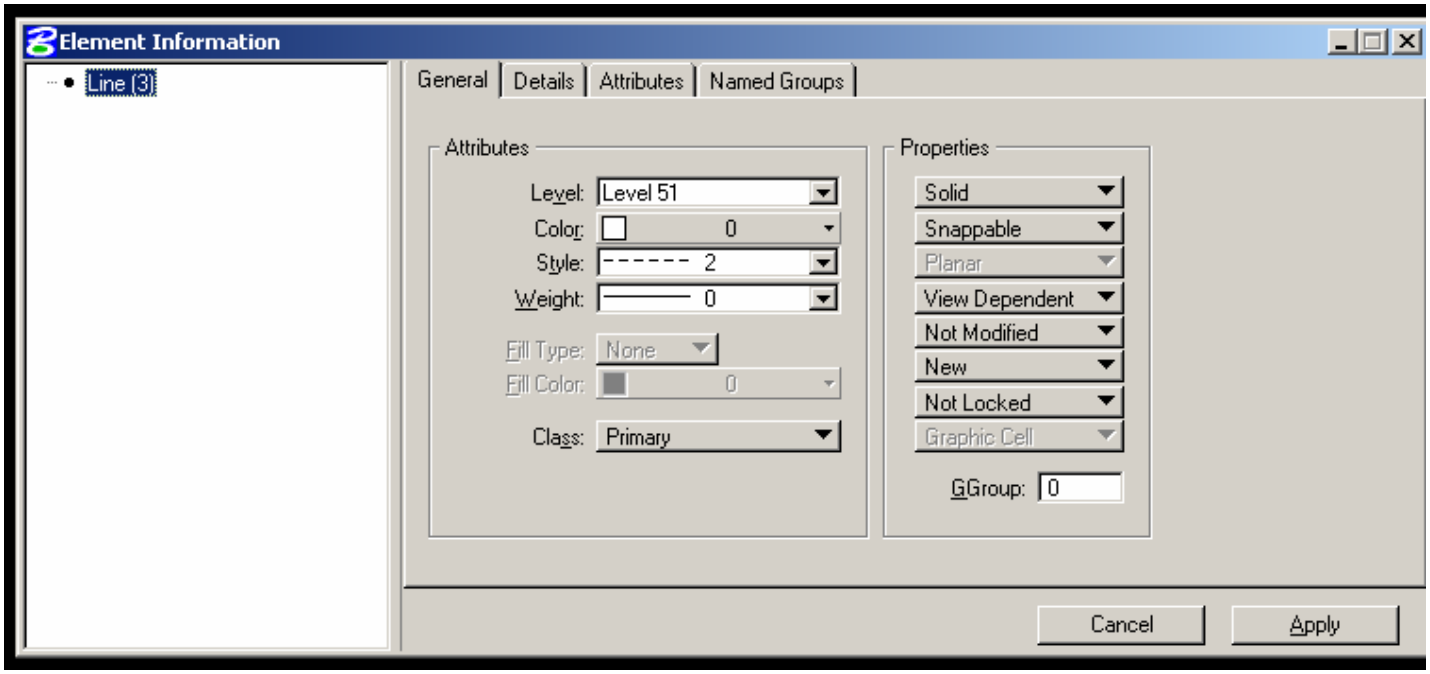

UTILITY POLES

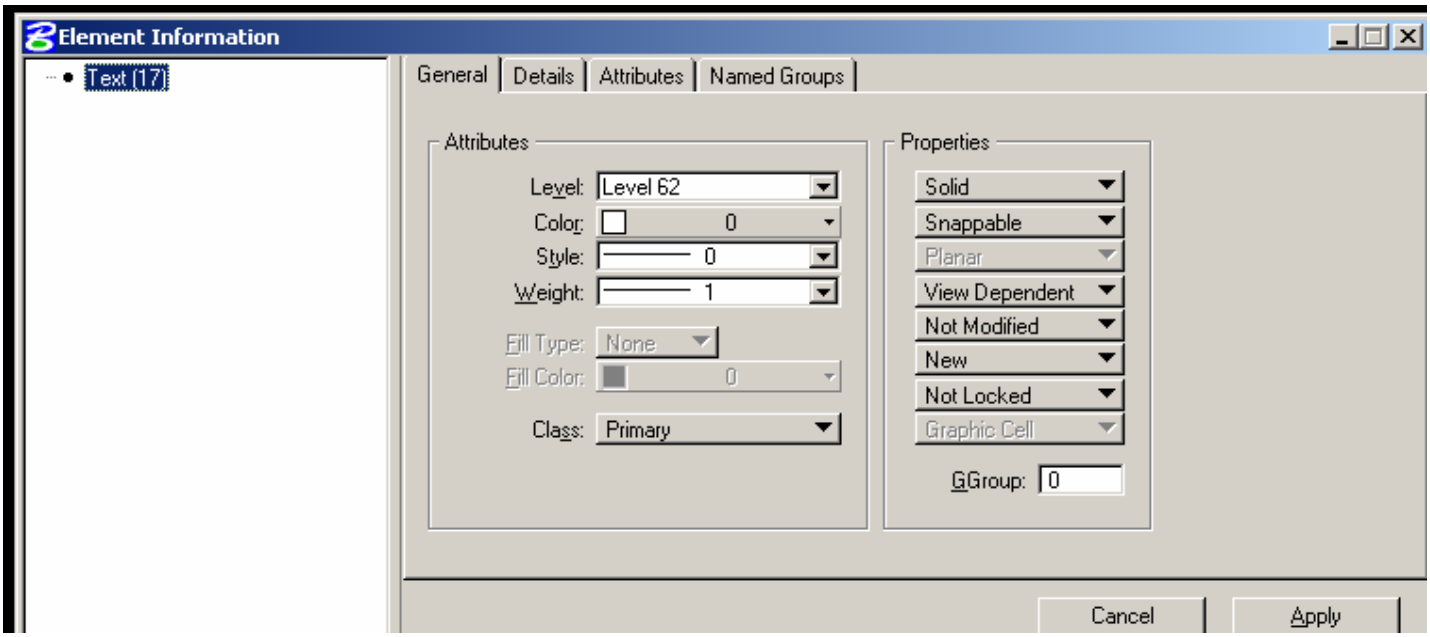

POWER MANHOLE

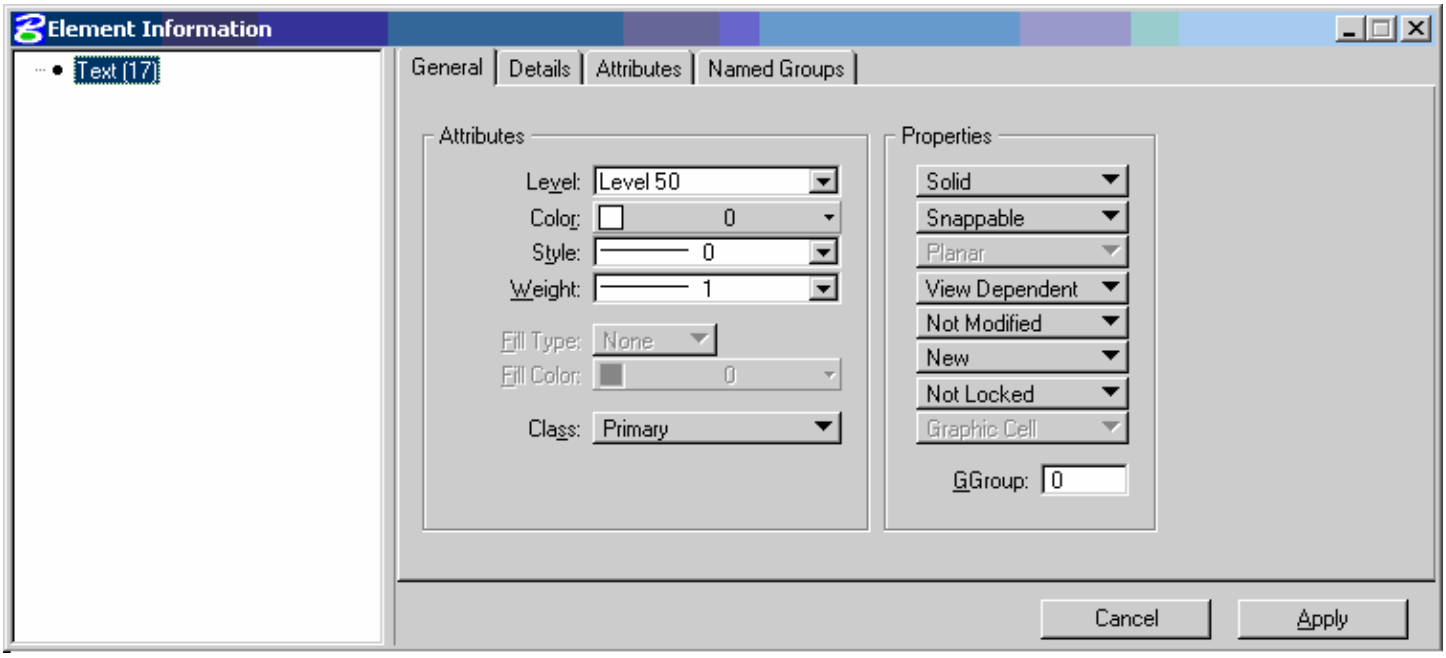

TELEPHONE MANHOLE

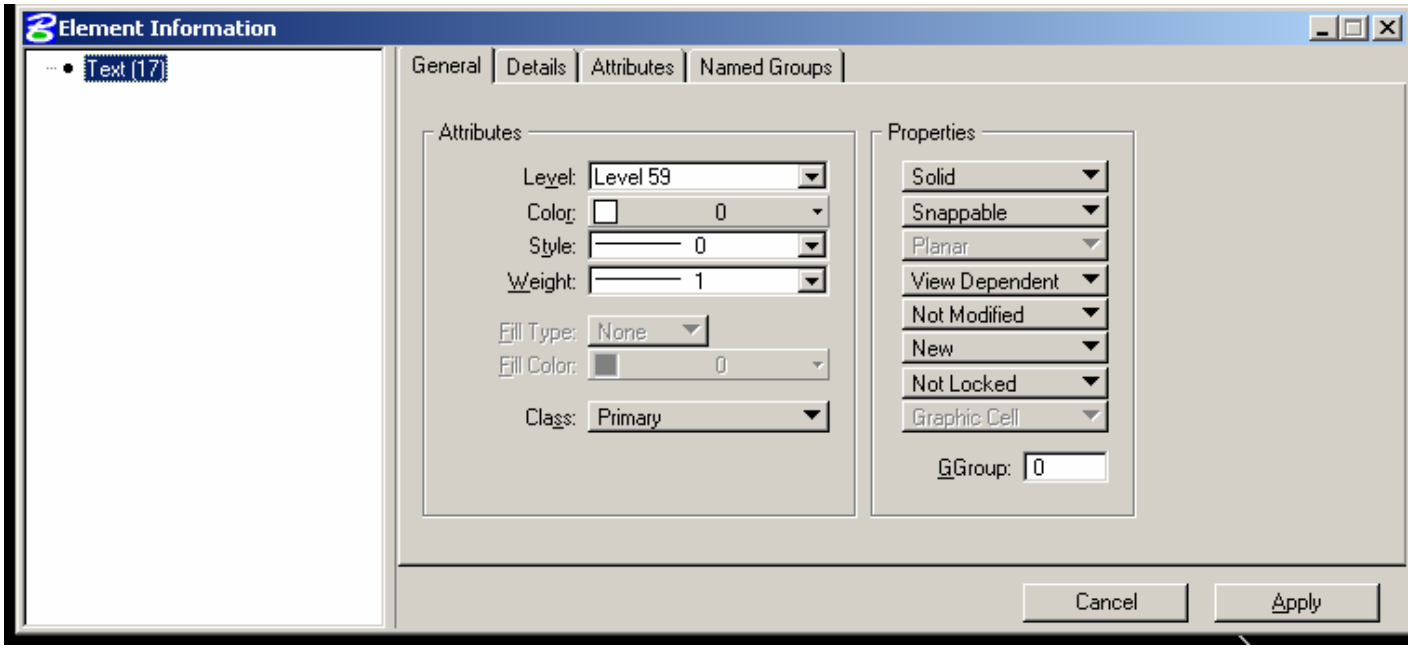

PROPERTY PINS (IPF)

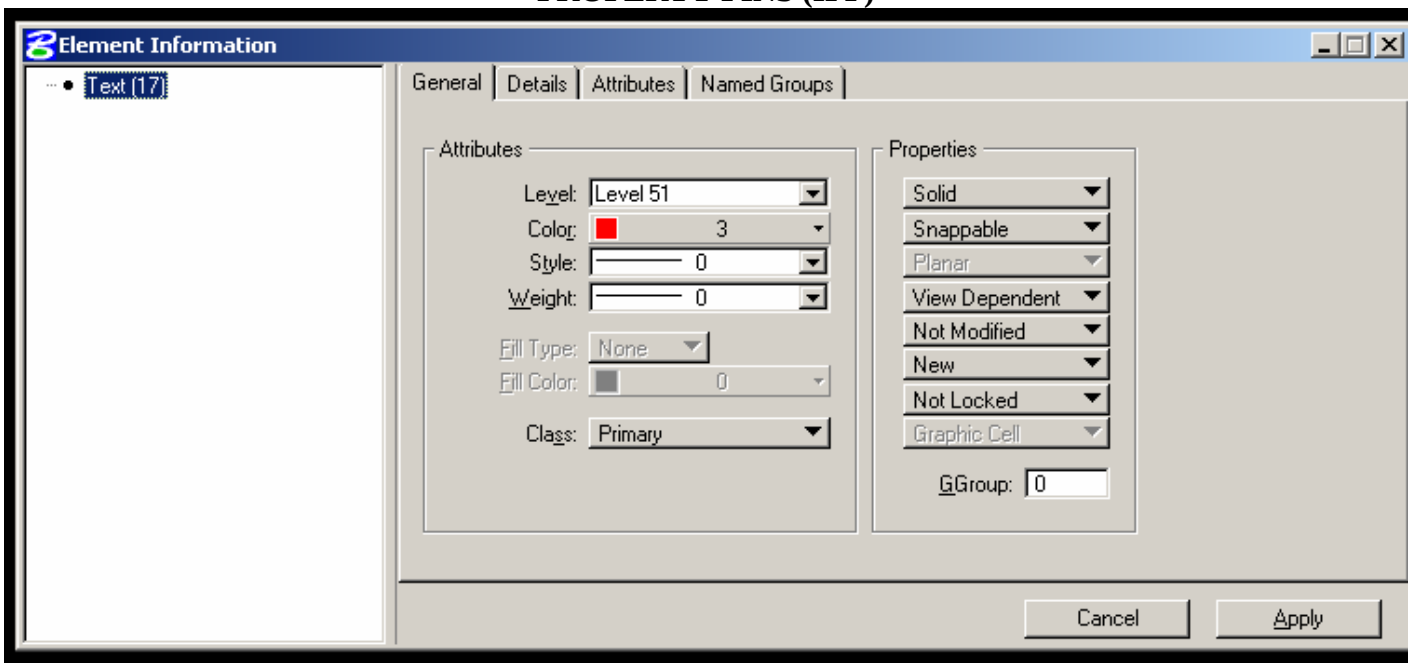

GLOBAL SHIFT FOR DEKALB COUNTY
KEY IN GO=164545.269,574868.238

GRAPHIC EXAMPLE

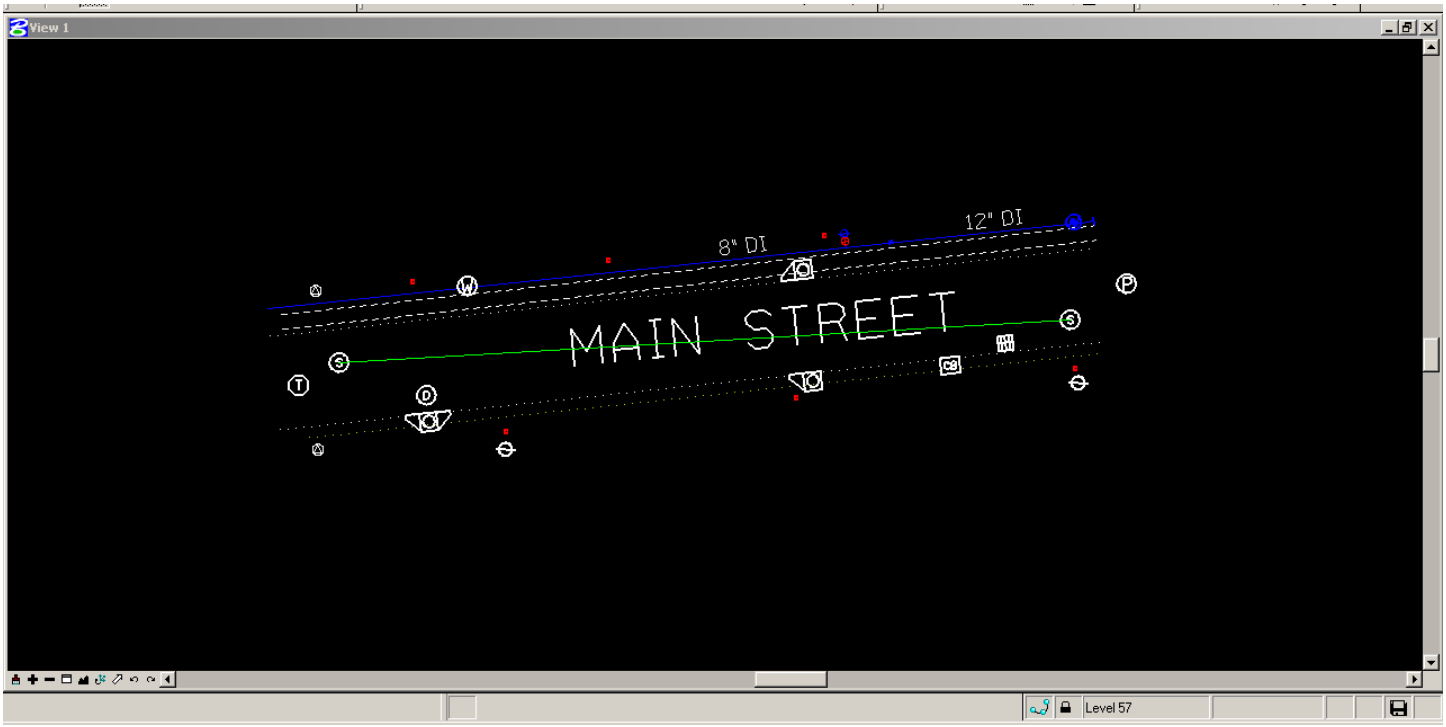

APPENDIX D

POTABLE WATER:
STANDARD DETAILS

H:\Atlanta Workshare\Dekalb County - W_WW Stds\4.0 Project Engineering\4.1 CAD Design\Dekalb STD-Details\13.00_CAD\Water_Standard_Details\001 Water Main Cul-de-Sac.dwg, Layout1, 12/18/2007 7:56:53 AM, eolivera, Test

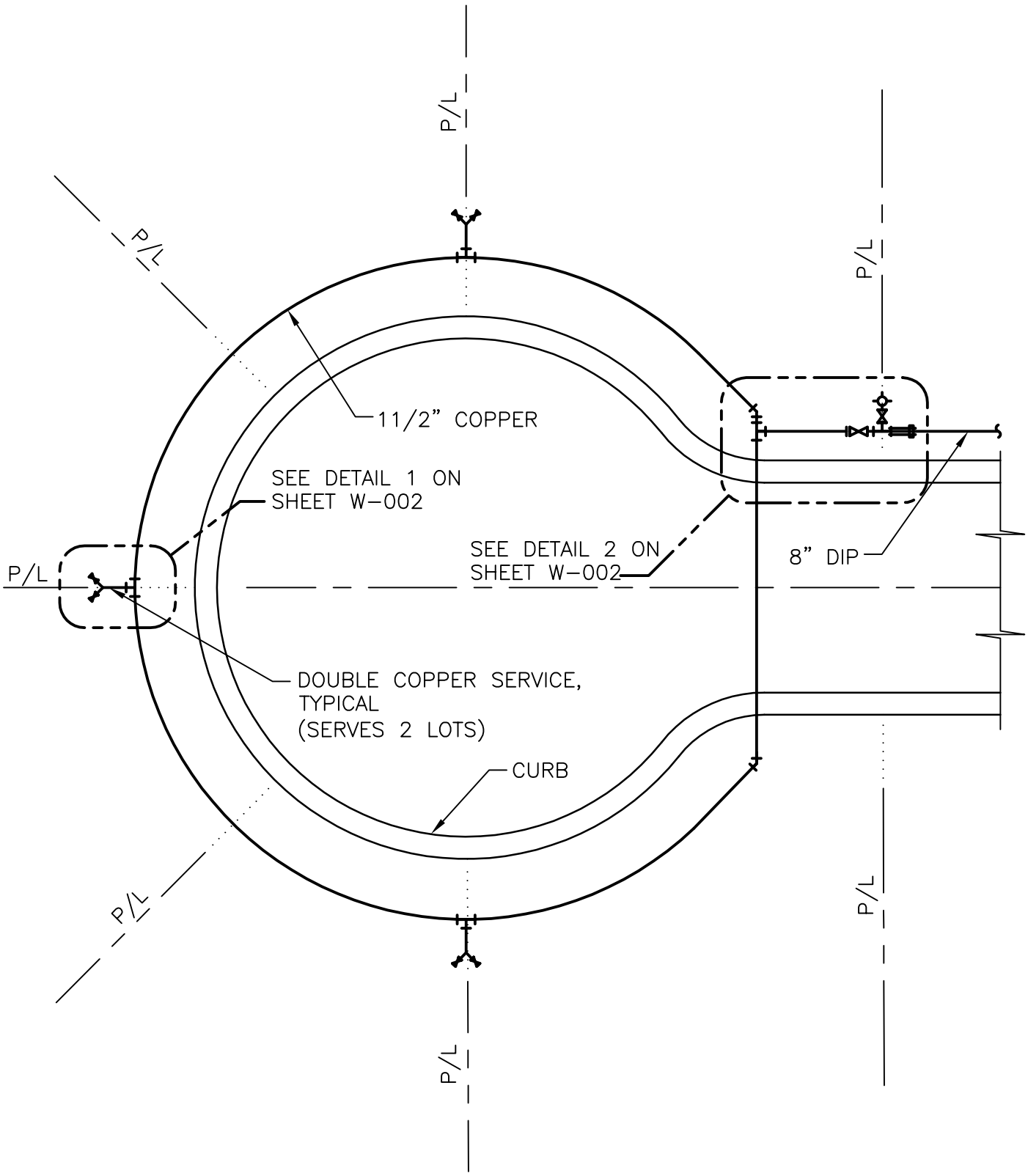

DEKALB COUNTY, GA.
Department of Watershed Management

STANDARD DETAILS

Water Main
Cul-de-Sac

NOT TO SCALE

11/07

DETAIL NO. W-001

H:\Atlanta Workshare\Dekalb County - W_WW Stds\4.0 Project Engineering\4.1 CAD Design\Dekalb STD-Details\13.00_CAD\Water_Standard_Details\002 Water Main Cul-de-Sac Details 1 & 2.dwg, Layout1, 12/18/2007 7:57:51 AM, eoliv

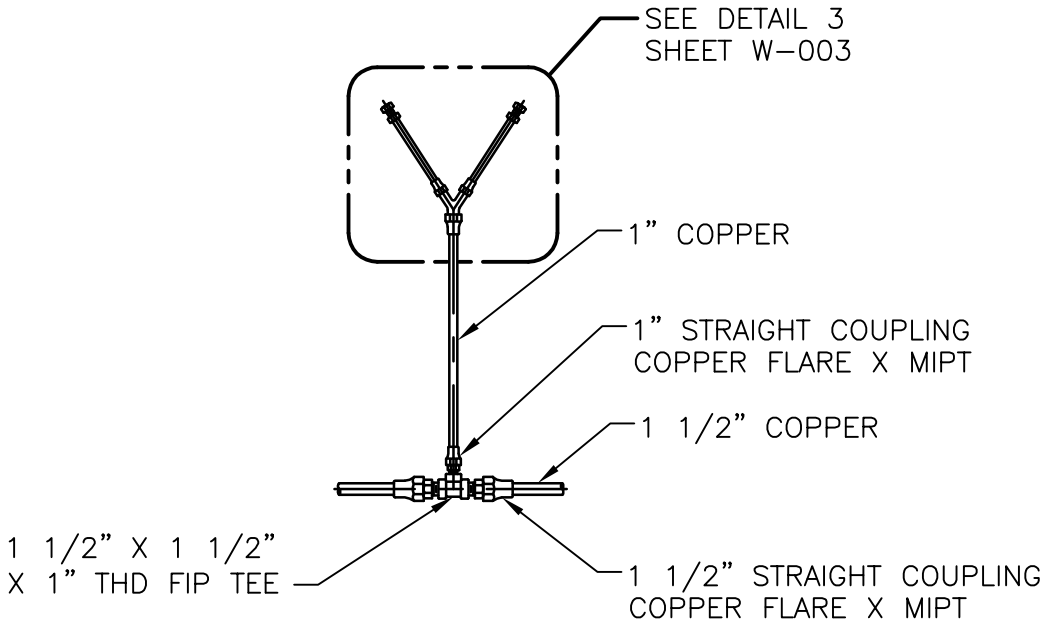

DETAIL 1

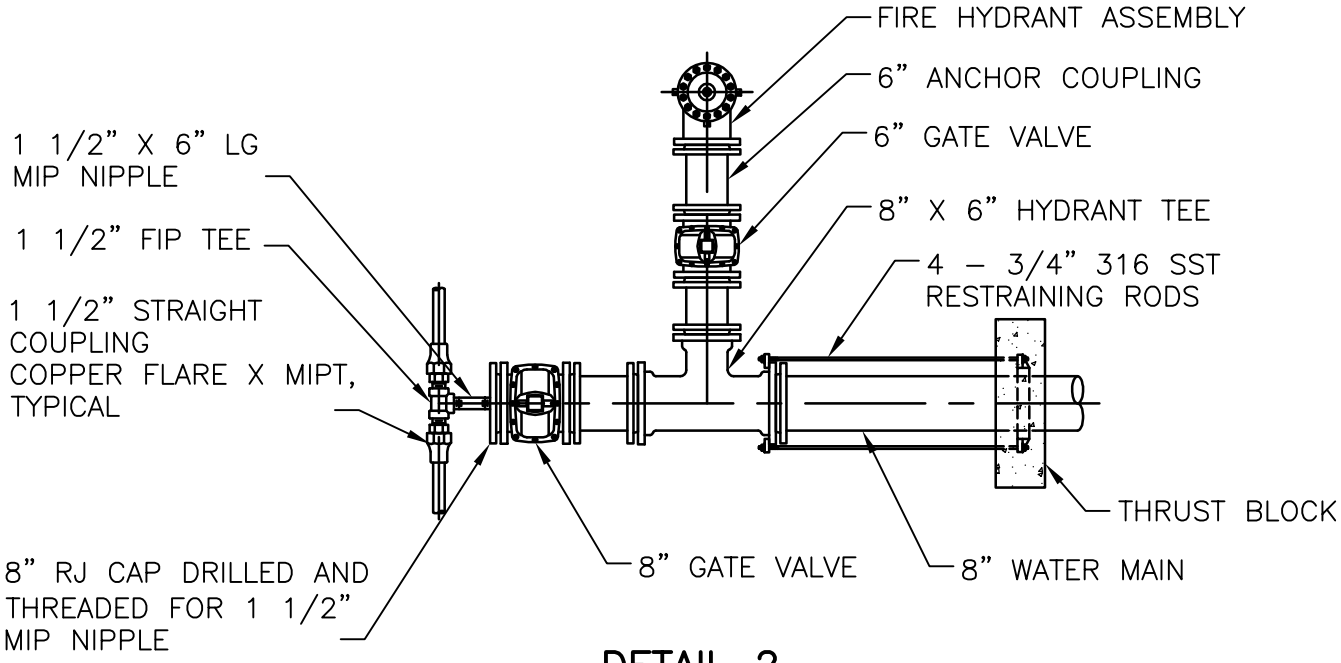

DETAIL 2

DEKALB COUNTY, GA. Department of Watershed Management	**STANDARD DETAILS**	11/07
	Water Main Cul-de-Sac Details 1 & 2	
	3/8" = 1'-0"	DETAIL NO. W-002

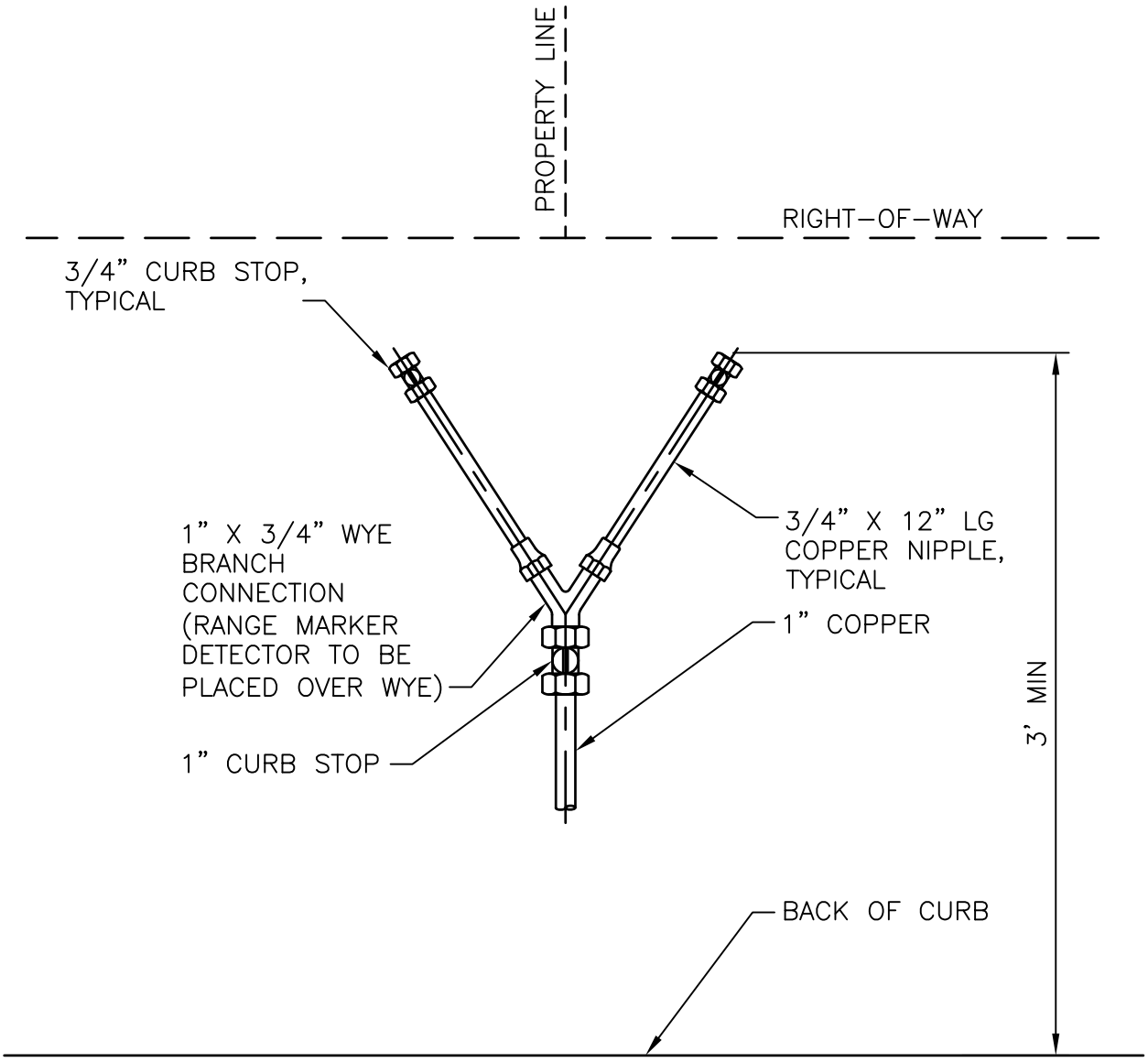

DETAIL 3

DEKALB COUNTY, GA. Department of Watershed Management	**STANDARD DETAILS**	07/08
	Water Main Cul-de-Sac Y-branch Detail	WATER Matters
	1" = 1'-0"	DETAIL NO. W-003

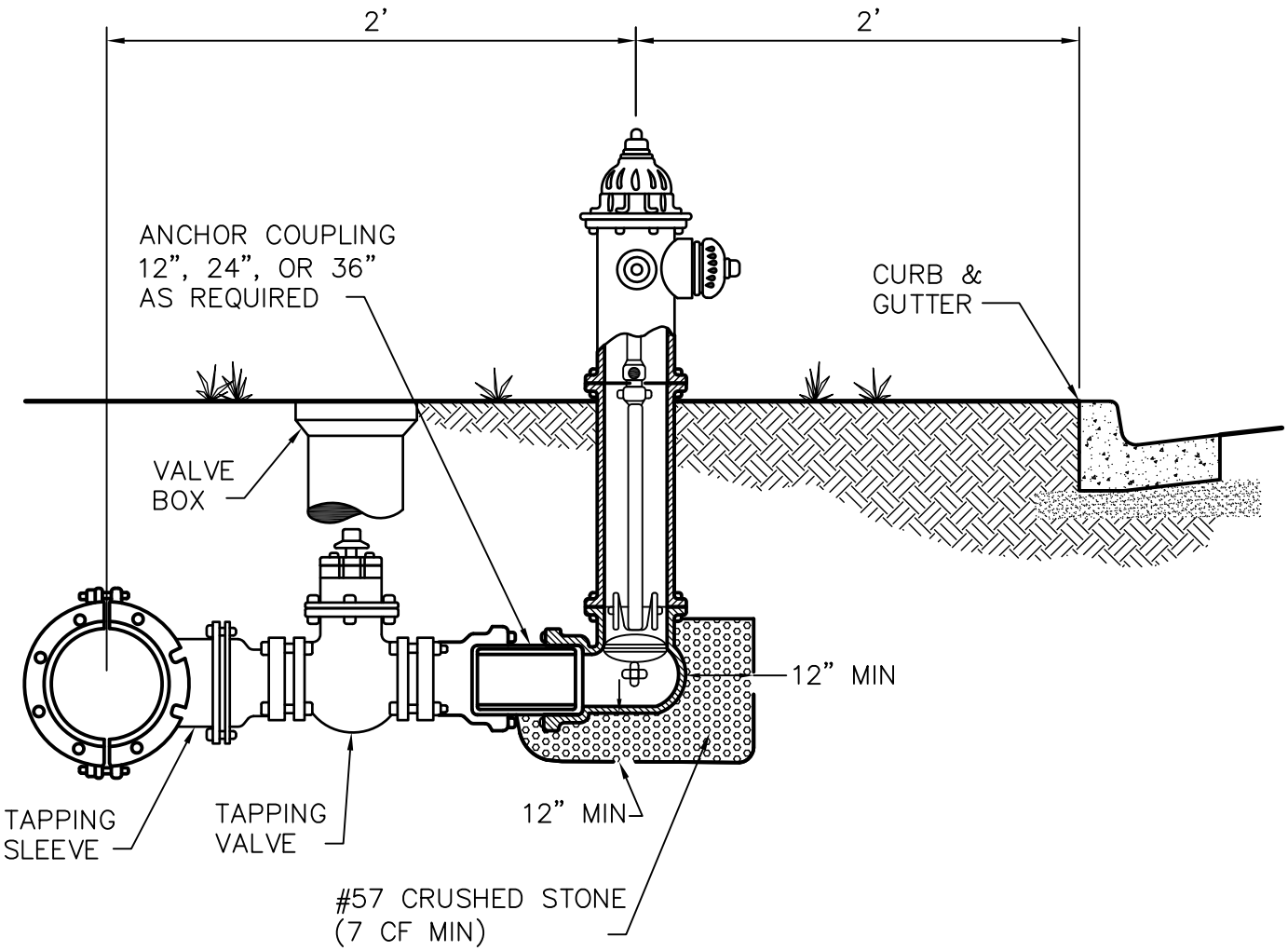

DEKALB COUNTY, GA.
Department of Watershed Management

STANDARD DETAILS

Typical Fire Hydrant Detail
Tap Installation

NOT TO SCALE

07/08

DETAIL NO. W-004

H:\Atlanta Workshare\Dekalb County - W_WW Stds\4.0 Project Engineering\4.1 CAD Design\Dekalb STD-Details\13.00_CAD\Water_Standard_Details\005 Maximum Allowable Offsets and Deflections.dwg, Layout1, 12/18/2007 9:36:59 AM

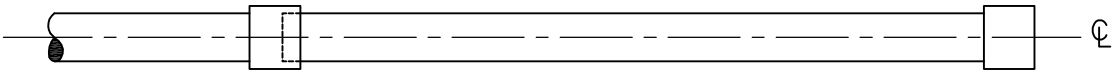

FIG. 1 COMPLETED JOINT
BEFORE OFFSET

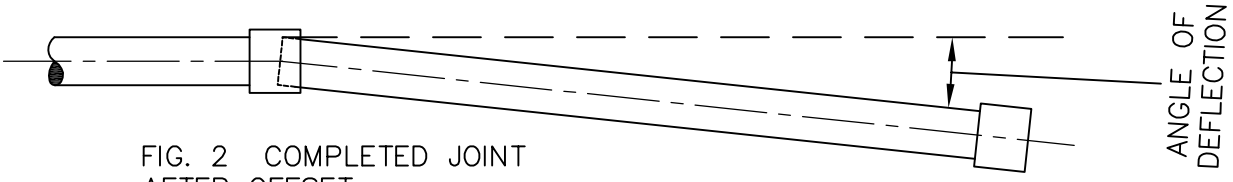

FIG. 2 COMPLETED JOINT
AFTER OFFSET

TYPE JOINT	PIPE SIZE	PIPE LENGTH	MAXIMUM ANGLE OF DEFLECTION	MAXIMUM OFFSET	RADIUS OF CURVATURE
SLIP	6" – 8"	18'	5°	19"	205'
MJ	6" – 8"	18'	5°	19"	205'
SLIP	16"	12'	4°	10"	175'
SLIP	16"	18'	4°	15"	260'

NOTE:
ALL JOINTS MUST BE ASSEMBLED AS SHOWN IN FIG. 1 BEFORE MAKING DEFLECTION.

DEKALB COUNTY, GA.
Department of Watershed Management

STANDARD DETAILS

Maximum Allowable Offsets and Deflections

NOT TO SCALE

11/07

DETAIL NO. W-005

H:\Atlanta Workshare\Dekalb County - W_WW Stds\4.0 Project Engineering\4.1 CAD Design\Dekalb STD-Details\13.00_CAD\Water_Standard_Details\006 Typical Stub-Out.dwg, Layout1, 12/18/2007 9:44:08 AM, eolivera, Test

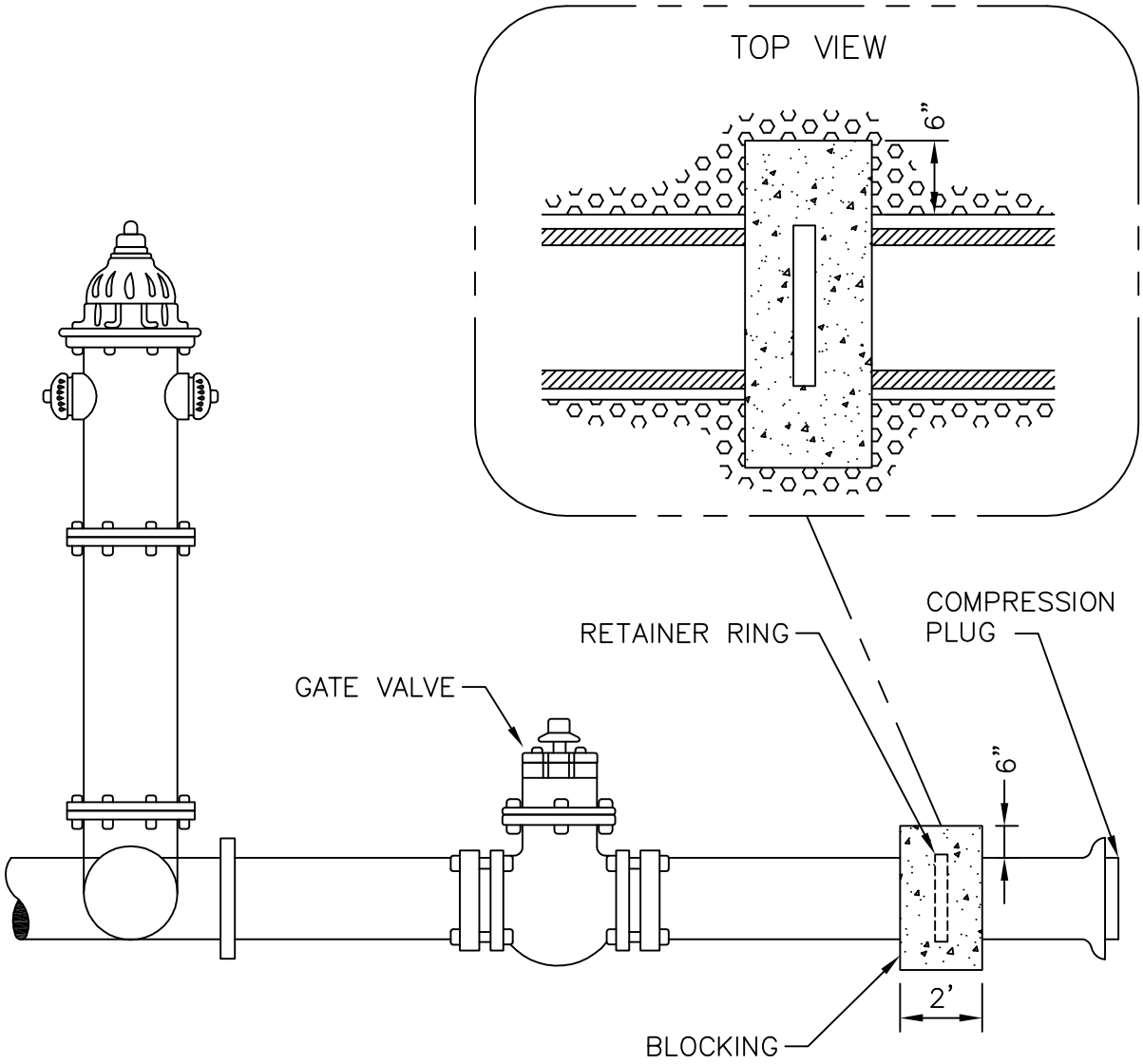

DEKALB COUNTY, GA.
Department of Watershed Management

STANDARD DETAILS

Typical Stub-Out

NOT TO SCALE

11/07

DETAIL NO. W-006

H:\Atlanta Workshare\Dekalb County - W_WW Stds\4.0 Project Engineering\4.1 CAD Design\Dekalb STD-Details\13.00_CAD\Water_Standard_Details\007 Typical Gate Valve Installation.dwg, Layout1, 12/18/2007 9:45:49 AM, eolivera, Te

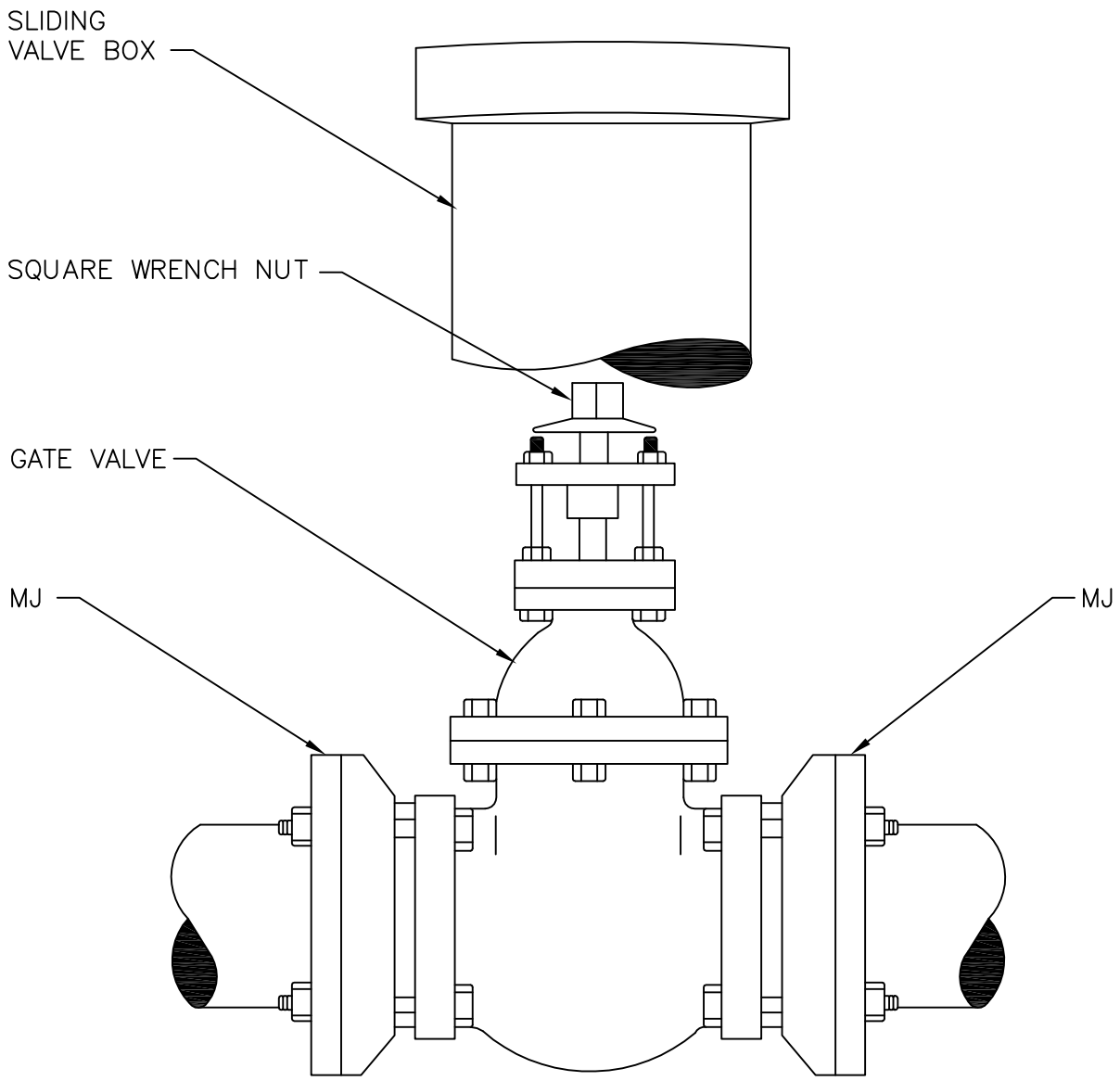

DEKALB COUNTY, GA.
Department of Watershed Management

STANDARD DETAILS

Typical Gate Valve Installation

NOT TO SCALE

11/07

DETAIL NO. W-007

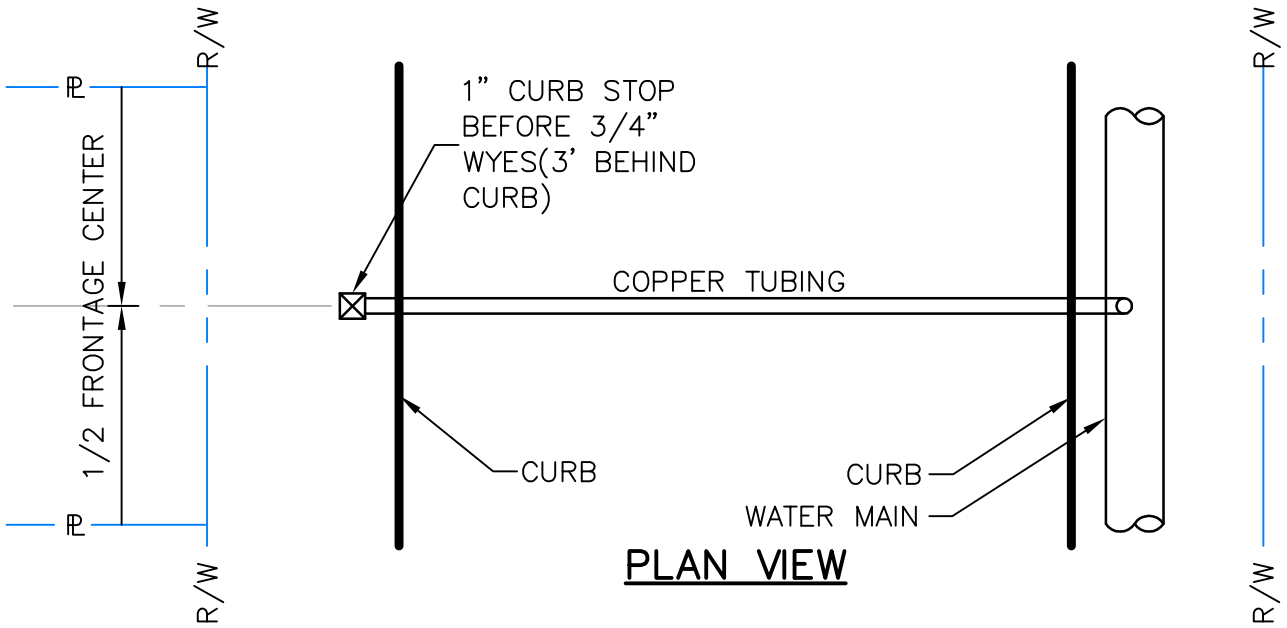

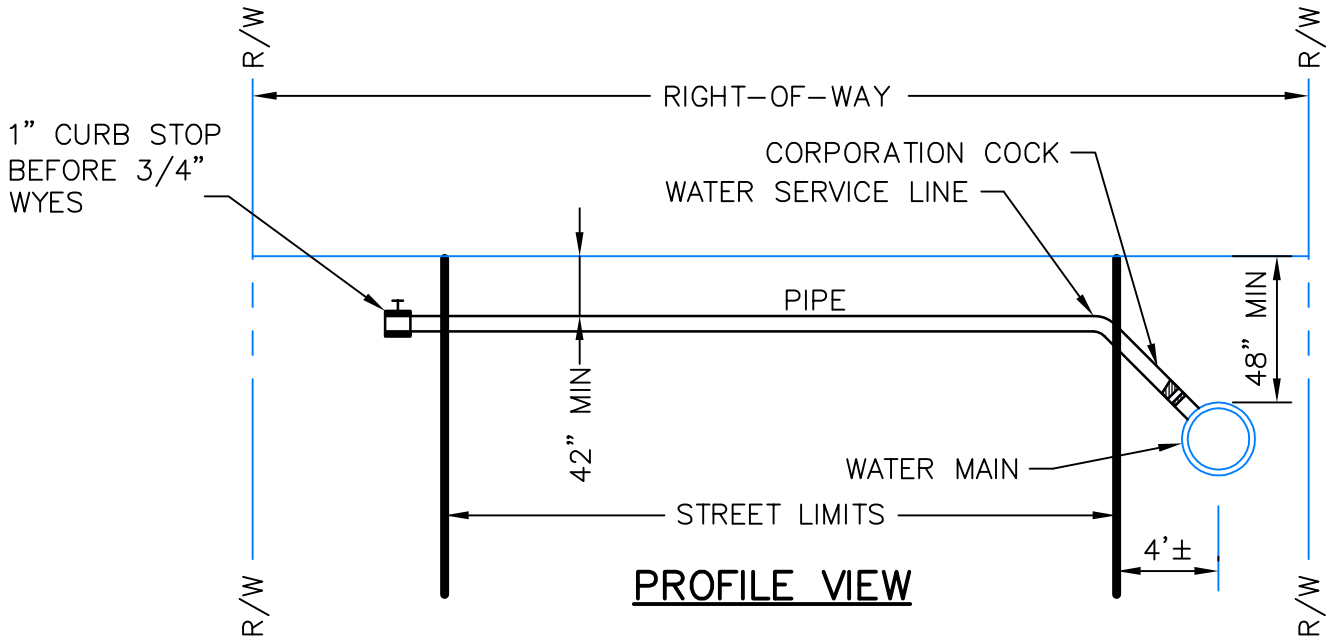

NOTES:

1. SERVICE LINES 1 INCH AND SMALLER WILL NORMALLY BE INSTALLED USING COPPER TUBING WITH COMPRESSION "PACK-JOINT" COUPLING TYPE.

2. LARGER SERVICE LINE MATERIAL WILL BE AS SPECIFIED ON THE DRAWING, AND REQUIRES COUNTY APPROVAL.

DEKALB COUNTY, GA. Department of Watershed Management	**STANDARD DETAILS**	11/07
	Typical Service Line Installation	
	NOT TO SCALE	DETAIL NO. W-008

H:\Atlanta Workshare\Dekalb County - W_WW Stds\4.0 Project Engineering\4.1 CAD Design\Dekalb STD-Details\13.00_CAD\Water_Standard_Details\009 Blocking Detail - Horizontal Thrust.dwg, Layout1, 12/18/2007 11:03:30 AM, eoliver

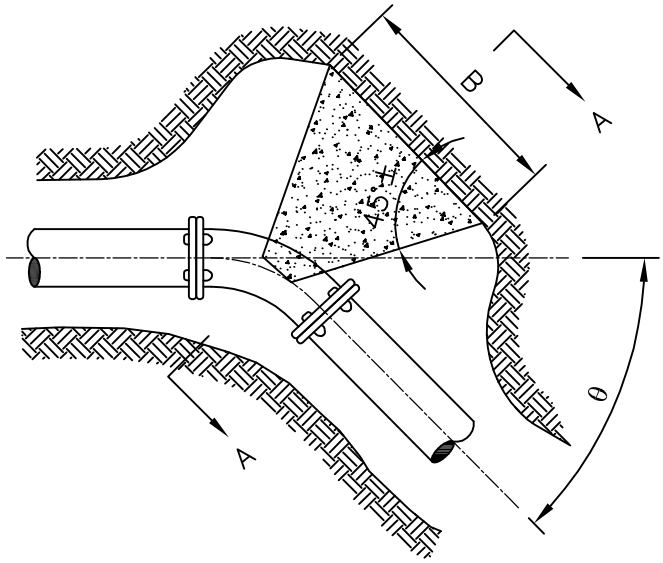

PLAN

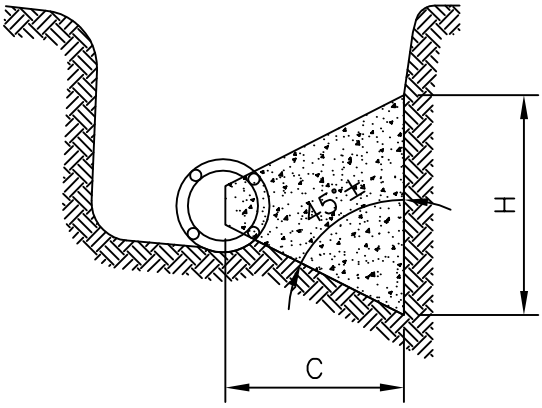

SECTION A–A

FITTING θ	(IN)	B (FT)	H (FT)	C (FT)	VOL (YD^3)
11–1/4	6	0.9	0.8	0.45	0.010
	8	1.2	1.1	0.60	0.022
	10	1.5	1.3	0.75	0.041
	12	1.8	1.6	0.90	0.071
	16	2.3	2.2	1.15	0.149
22–1/2	6	1.3	1.1	0.65	0.023
	8	1.6	1.6	0.80	0.048
	10	2.1	1.9	1.05	0.097
	12	2.5	2.3	1.25	0.165
	16	3.3	3.0	1.65	0.362
45	6	1.7	1.6	0.85	0.050
	8	2.2	2.2	1.10	0.113
	10	2.8	2.7	1.40	0.222
	12	3.3	3.3	1.65	0.375
	16	4.5	4.3	2.25	0.887
90	6	2.3	2.2	1.15	0.118
	8	3.1	2.9	1.55	0.278
	10	3.8	3.7	1.90	0.530
	12	4.6	4.4	2.30	0.921
	16	6.1	5.9	3.05	2.142
TEES	6	2.1	1.8	1.00	0.073
	8	2.6	2.5	1.30	0.170
	10	3.2	3.1	1.60	0.319
	12	3.9	3.7	1.95	0.565
	16	5.1	5.0	2.55	1.303

NOTES:

1. DIMENSIONS OF THRUST BLOCKS WERE CALCULATED ASSUMING A STATIC PRESSURE OF 250 PSI AND A SOIL BEARING PRESSURE OF 2,000 PSF.

2. DIMENSIONS SHOWN CAN BE VARIED AS FIELD CONDITIONS DICTATE, BUT IT IS IMPORTANT THAT THE CORRECT VOLUME AS SHOWN IN TABLE BE USED AND THAT ALLOWABLE SOIL BEARING PRESSURE NOT BE EXCEEDED.

DEKALB COUNTY, GA.
Department of Watershed Management

STANDARD DETAILS

Blocking Detail
Horizontal Thrust

NOT TO SCALE

11/07

DETAIL NO. W-009

H:\Atlanta Workshare\Dekalb County - W_WW Stds\4.0 Project Engineering\4.1 CAD Design\Dekalb STD-Details\13.00_CAD\Water_Standard_Details\010 Blocking Detail - Downward Thrust.dwg, Layout1, 12/18/2007 10:16:07 AM, eolive

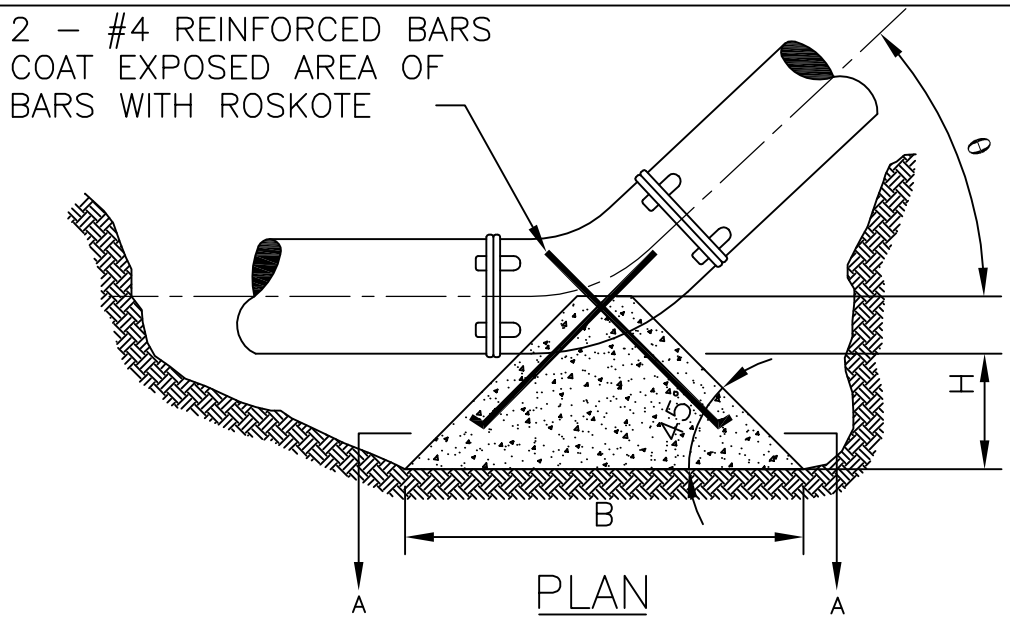

FITTING θ	DIA (IN)	B (FT)	H (FT)	VOL (YD^3)
11–1/4	6	1.0	0.3	0.008
	8	1.2	0.4	0.012
	10	1.5	0.6	0.026
	12	1.9	0.8	0.055
	16	2.4	1.0	0.110
22–1/2	6	1.3	0.5	0.017
	8	1.7	0.7	0.039
	10	2.1	0.9	0.075
	12	2.5	1.1	0.129
	16	3.2	1.6	0.308
45	6	1.7	0.7	0.039
	8	2.2	0.9	0.083
	10	2.7	1.2	0.164
	12	3.3	1.5	0.305
	16	4.3	2.0	0.688

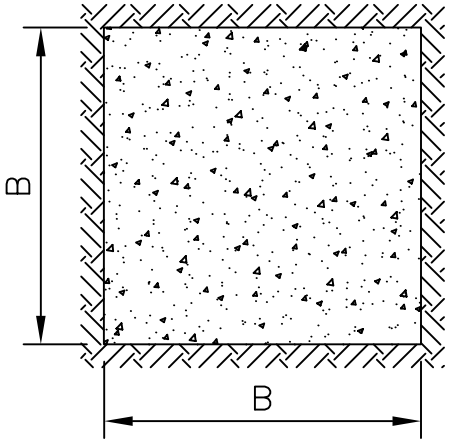

NOTE:

1. DIMENSIONS OF THRUST BLOCKS WERE CALCULATED ASSUMING A STATIC PRESSURE OF 250 PSI, A DEPTH OF COVER OF 4 FT., AND A SOIL BEARING PRESSURE OF 2,000 PSF.

2. DIMENSIONS SHOWN CAN BE VARIED AS FIELD CONDITIONS DICTATE, BUT IT IS IMPORTANT THAT THE CORRECT VOLUME AS SHOWN IN TABLE BE USED AND THAT ALLOWABLE SOIL BEARING PRESSURE NOT BE EXCEEDED.

DEKALB COUNTY, GA. Department of Watershed Management	STANDARD DETAILS	11/07
	Blocking Detail **Downward Thrust**	
	NOT TO SCALE	DETAIL NO. W-010

H:\Atlanta Workshare\Dekalb County - W_WW Stds\4.0 Project Engineering\4.1 CAD Design\Dekalb STD-Details\13.00_CAD\Water_Standard_Details\011 Blocking Detail - Upward Thrust.dwg, Layout1, 2/22/2008 2:16:07 PM, mhofreit, Te

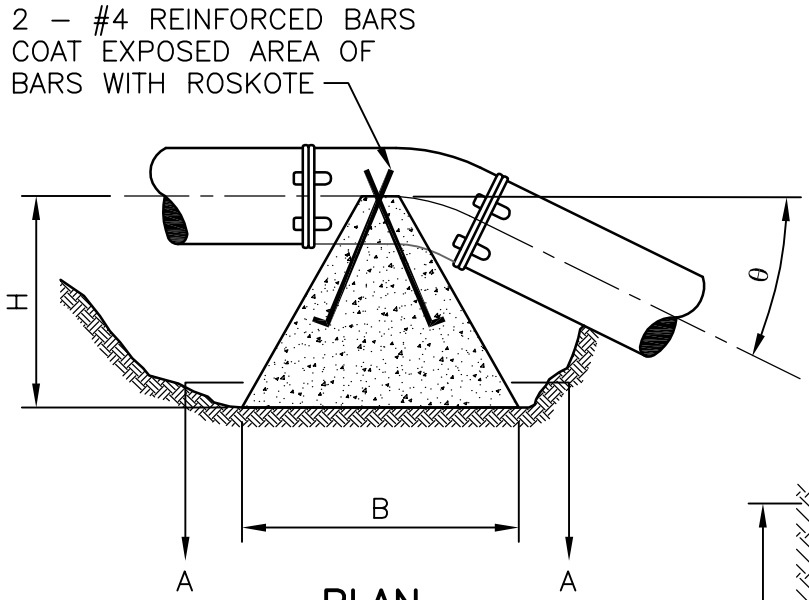

PLAN

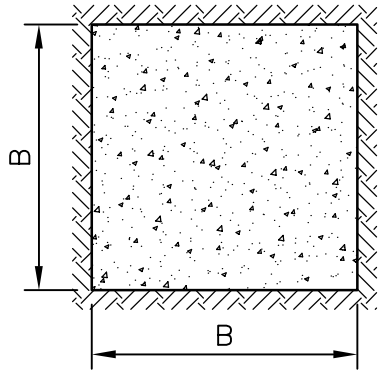

SECTION A–A

FITTING θ	DIA (IN)	B (FT)	H (FT)	VOL (YD^3)
11–1/4	6	3.0	2.2	0.4
	8	3.5	2.4	0.6
	10	4.0	3.2	1.0
	12	4.5	3.5	1.4
	16	5.0	4.8	2.4
22–1/2	6	3.5	2.9	0.7
	8	4.0	3.9	1.2
	10	4.5	4.6	1.9
	12	5.5	4.8	2.7
	16	6.5	5.9	4.8
45	6	4.5	3.4	1.3
	8	5.0	4.6	2.2
	10	6.0	5.1	3.5
	12	6.5	6.2	5.0
	16	8.0	7.3	8.8

NOTES:

1. VOLUME WAS CALCULATED NEGLECTING WEIGHT OF FITTING, WATER, AND BACKFILL USING A STATIC PRESSURE OF 250 PSI.

2. DIMENSIONS OF BLOCK WERE CALCULATED ASSUMING A SOIL BEARING PRESSURE OF 2,000 POUNDS PER SQUARE FOOT.

3. DIMENSIONS SHOWN CAN BE VARIED AS FIELD CONDITIONS DICTATE, BUT IT IS IMPORTANT THAT THE CORRECT VOLUME AS SHOWN IN TABLE BE USED AND THAT ALLOWABLE SOIL BEARING PRESSURE NOT BE EXCEEDED.

DEKALB COUNTY, GA.
Department of Watershed Management

STANDARD DETAILS

Blocking Detail
Upward Thrust

NOT TO SCALE

11/07

DETAIL NO. W-011

H:\Atlanta Workshare\Dekalb County - W_WW Stds\4.0 Project Engineering\4.1 CAD Design\Dekalb STD-Details\13.00_CAD\Water_Standard_Details\012 DDC BFP Installation Non-hazardous Fire Line Installation.dwg, SHT1 Fire Line, 1

MINIMUM CONTAINMENT PROTECTION REQUIREMENT
NEW CONSTRUCTION AND RETROFIT INSTALLATIONS NONHAZARDOUS (DEDICATED) FIRE LINE SERVICE CONNECTION
DOUBLE DETECTOR CHECK (DDC) VALVE ASSEMBLY

SPECIFICATIONS: The CUSTOMER/OWNER shall furnish and install a DOUBLE DETECTOR CHECK (DDC) BACKFLOW PREVENTER (BFP) assembly in a size to match that of the required fire line service connection. The device shall have a metered 3/4" by-pass line as shown on the illustration. The DDC BFP assembly shall be provided with a resilient seated outside stem and yoke flanged gate valve near the inlet and outlet sides of the device. The device shall be provided with three brass ball valve test cocks fitted with brass or plastic threaded plugs. A fourth test cock shall also be provided on the upstream side of the inlet shut-off valve. The metered by-pass line on the assembly shall include a bronze detector meter and a double check valve (DCV) BFP. The device and bodies shall be equivalent to cast iron, coated inside and out with FDA approved fused epoxy coating and assembled with bolts that are resistant to electrolysis. All interior components of the checking device shall be equivalent to bronze or stainless steel construction and be accessible by top entry for maintenance and repair.

NOTE: All components of the assembly shall be classified or listed by the Underwriters Laboratories and Factory Mutual Insurance. The checking devices shall have approvals and conform to all current requirements or the University of Southern California, Foundation for Cross Connection Control and Hydraulic Research (USC-FCCHR), be individually factory tested, shipped, and installed as a unit.

INSTALLATION INSTRUCTIONS: The DDC BFP assembly shall not be buried in earth but installed below ground as in a concrete vault and as close as practical to the property line of the premises.
Note: Under NO circumstances will any connection be allowed on the system other than for fire fighting or fire protection purposes.

DEVICE TESTING: All DDC assemblies shall be tested at time of installation and at least annually thereafter.

PERMITS, PLAN APPROVALS AND INSPECTIONS: Must be obtained and scheduled prior to work through DeKalb County, Department of Public Works. Contact Cross-Connection Control Specialist at 770-414-2354 for installation inspection and device testing.

APPROVED DEVICES:

	(or equivalent)	
Ames	3000 SE DCDA	3", 4", 6", 8"
Conbraco	40-600 DCDA	3", 4", 6", 8", 10"
Febco	856 DCDA	3", 4", 6", 8",
Hersey	DDC-II	3", 4", 6", 8", 10"
Watts Regulator	709 DCDA	3", 4", 6", 8", 10"
Wilkens	950 DA	3", 4", 6", 8", 10"

VAULT SPECIFICATIONS:

(1) Vault shall be precast reinforced concrete with a minimum thickness of at least 6".

(2) Vault bottom 6" poured concrete slab, sloped to gravel sump (4" x 4"), slab to be poured on 12" of No. 57 compacted stone.

(3) Vault top shall be reinforced concrete with 36" x 36" access opening offset to one side.

(4) Access ladder doweled to wall and centered at access opening.

(5) Hatch cover: Bilco-aluminum single model #J-4AL or equivalent.

(6) Vault inlet/outlet pipe openings to be sealed with grout or mortar; pipe must not support vault.

(7) BFP device to be supported at three points with pipe stand.

(8) Thrust blocking (as required) shall be in accordance with DCDWM specifications.

(9) Thrust tie rods shall be bitumastic coated and all pipe and fittings of ductile iron.

(10) Vault to be installed on owner's private property.

(11) All materials to be furnished by the customer/owner.

TYPICAL VAULT INSTALLATION
(Minimum clearance dimensions)

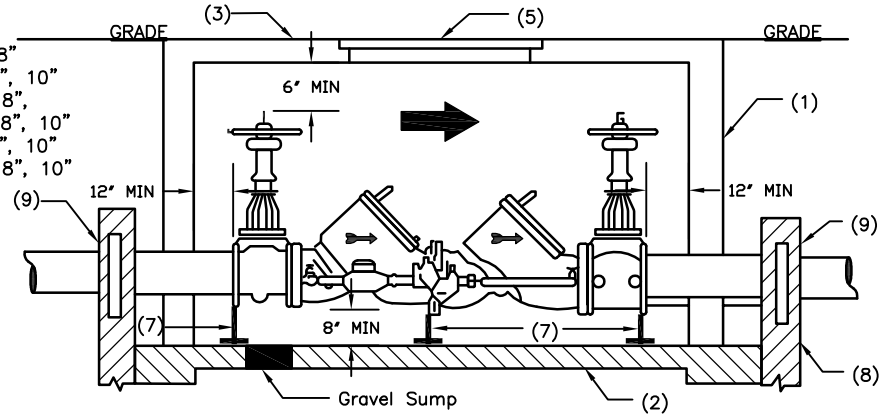

ELEVATION

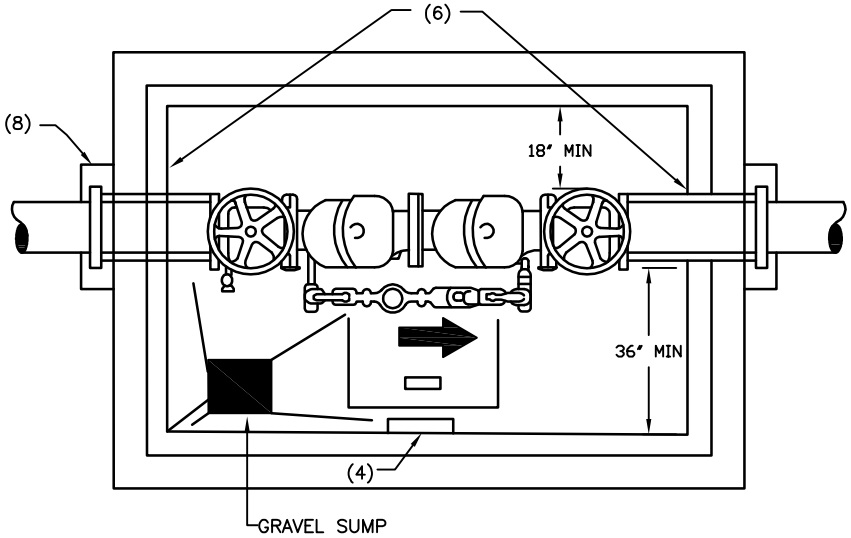

PLAN VIEW

DEKALB COUNTY, GA.
Department of Watershed Management

STANDARD DETAILS

DDC BFP Installation
Non-hazardous Fire Line Installation

NOT TO SCALE

11/07

DETAIL NO. W-012

MINIMUM CONTAINMENT PROTECTION REQUIREMENT
NEW CONSTRUCTION AND RETROFIT INSTALLATIONS
SIZE: 3 INCH AND ABOVE SERVICE METER SIZE: 3 INCH AND ABOVE
DOUBLE CHECK VALVE (DCV) ASSEMBLY

SPECIFICATIONS: The CUSTOMER/OWNER shall furnish and install a DOUBLE CHECK VALVE ASSEMBLY (DCV) BACKFLOW PREVENTER (BFP) in a size to match that of the required service meter. The DCV BFP assembly shall be provided with an epoxy coated, resilient seated flanged outside stem and yoke gate valve near the inlet and outlet sides of the device. The device shall be provided with three ball valve test cocks fitted with brass or plastic threaded plugs. A fourth test cock shall also be provided on the upstream side of the inlet shut-off valve. The device and valve bodies shall be equivalent to cast iron, coated inside and out with FDA approved fused epoxy coating and assembled with bolts that are resistant to electrolysis. All interior components of the checking device shall be equivalent to bronze and/or stainless steel construction and be accessible by top entry for maintenance and repair.

NOTE: All components of the assembly shall be certified by a nationally recognized testing laboratory. The DCV device shall have current approval from the University of Southern California, foundation for Cross Connection Control and Hydraulic Research (USC-FCCHR). Assembly to be individually factory tested, shipped and installed as a unit.

INSTALLATION INSTRUCTIONS: The DCV BFP assembly shall not be buried in earth but installed below ground as in a concrete vault and as close as practical to the downstream side of the meter installation.
Note: Under NO circumstances will a by-pass or any intervening connection be allowed between the meter installation and the DCV, unless this connection is protected by an approved BFP.

CAUTION: Section 607.3, Thermal Expansion Control, of the International Plumbing Code, 2006, as adopted by the Georgia State Plumbing Code (combined 2007 and 2008 Amendments) should be incorporated in the design of installations and duly noted on all applicable drawings prior to the installation of any inline checking device(s).

DEVICE TESTING: All DCV assemblies shall be tested at time of installation and at least annually thereafter.

PERMITS, PLAN APPROVALS AND INSPECTIONS: Must be obtained and scheduled prior to work through DeKalb County, Department of Public Works. Contact Cross-Connection Control Specialist at 770-414-2354 for installation inspection and device testing.

APPROVED DEVICES: (or equivalent)

Ames	2000 DCA OSY-RW	4", 6", 8"
Conbraco	40-100 OSY-RW	3", 4", 6", 8", 10"
Febco	850 OSY-RW	3", 4", 6", 8",
Watts	709 OSY-RW	3", 4", 6", 8", 10"
Wilkens	950 OSY-RW	3", 4", 6", 8"

VAULT SPECIFICATIONS:

(1) Vault shall be precast reinforced concrete with a minimum thickness of at least 6".

(2) Vault bottom 6" poured concrete slab, sloped to gravel sump (4" x 4"), slab to be poured on 12" of No. 57 compacted stone.

(3) Vault top shall be reinforced concrete with 36" x 36" access opening offset to one side.

(4) Access ladder doweled to wall and centered at access opening.

(5) Hatch cover: Bilco-aluminum single model #J-4AL or equivalent.

(6) Vault inlet/outlet pipe openings to be sealed with grout or mortar; pipe must not support vault.

(7) BFP device to be supported at three points with pipe stand.

(8) Thrust blocking (as required) shall be in accordance with DCDWM specifications.

(9) Thrust tie rods shall be bitumastic coated and all pipe and fittings of ductile iron.

(10) Vault to be installed on owner's private property.

(11) All materials to be furnished by the customer/owner.

TYPICAL VAULT INSTALLATION
(Minimum clearance dimensions)

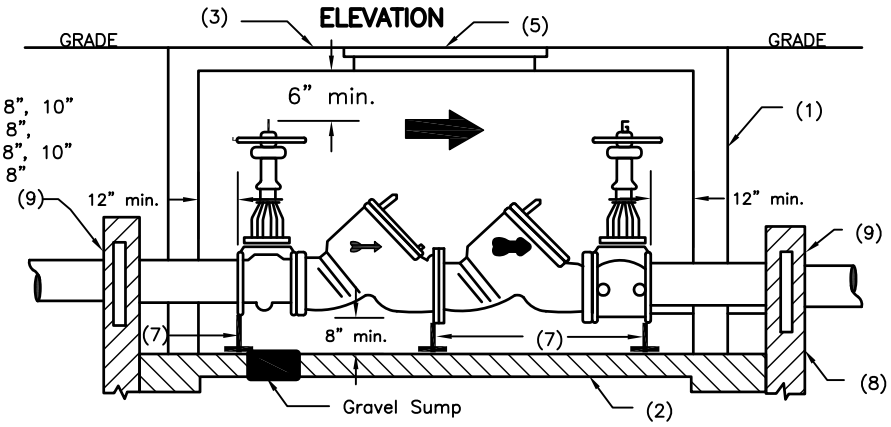

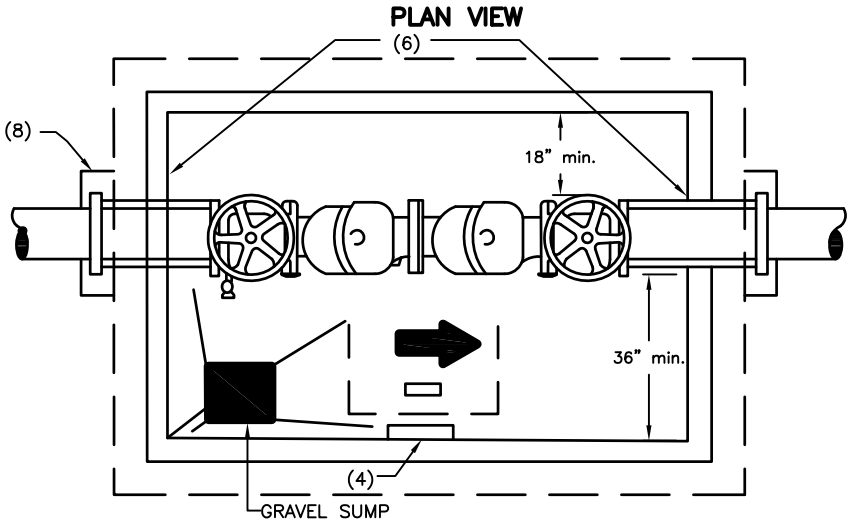

DEKALB COUNTY, GA.
Department of Watershed Management

STANDARD DETAILS

DCV BFP Installation
3 Inches And Larger

NOT TO SCALE

07/08

DETAIL NO. W-013

H:\Atlanta Workshare\Dekalb County - W_WW Stds\4.0 Project Engineering\4.1 CAD Design\Dekalb STD-Details\13.00_CAD\Water_Standard_Details\014RPZ BFP Installation .75" to 2"l.dwg, SHT3 through 2 inch, 12/19/2007 9:08:44 AM

MINIMUM CONTAINMENT PROTECTION REQUIREMENT
NEW CONSTRUCTION AND RETROFIT INSTALLATIONS
SERVICE SIZE: 3/4" THROUGH 2" METER SIZE: THROUGH 2"
REDUCED PRESSURE ZONE BACKFLOW PREVENTER (RPZ BFP) ASSEMBLY

SPECIFICATIONS: The CUSTOMER/OWNER shall furnish and install a REDUCED PRESSURE ZONE BACKFLOW PREVENTER (RPZ BFP) in a size to match that of the required service meter. The RPZ BFP assembly shall include a full port ball valve on the inlet and outlet sides with a union between the device and each valve. The device shall have three ball valve test cocks in an acceptable position fitted with brass or plastic plugs. A fourth test cock shall be provided on the upstream side of the inlet shutoff valve. A strainer shall be installed immediately upstream of the BFP, unless the BFP is directly downstream of the meter. All components of the assembly shall be equivalent to bronze or stainless steel construction and assembled with bolts that are resistant to electrolysis.

NOTE: All components of the assembly shall be certified by a nationally recognized testing laboratory. The RPZ device shall have current approval from the University of Southern California, foundation for Cross Connection Control and Hydraulic Research (USC–FCCHR). Assembly to be individually factory tested, shipped and installed as a unit.

NSTALLATION INSTRUCTIONS: The RPZ BFP assembly shall not be installed below ground. If installed outdoors, an above ground enclosure must be provided for protection from freezing temperatures. Indoor installations shall be readily accessible for testing and maintenance and may not be installed any higher than 6 feet from the floor. Install an approved drain with an air gap where relief zone discharge could cause water damage. No connection will be allowed between the service meter and a BFP used for system containment unless this connection is protected by an approved BFP.

CAUTION: Section 607.3, Thermal Expansion Control, of the International Plubming Code, 2006, as adopted by the Georgia State Plumbing Code (combined 2007 and 2008 Amendments) should be incorporated in the design of installations and duly noted on all applicable drawings prior to the installation of any inline checking device(s).

DEVICE TESTING: All RPZ assemblies shall be tested at time of installation and at least ANNUALLY thereafter. Cross–Connection Control Specialist, at 770–414–2354 for installation inspections and device tests.

APPROVED DEVICES: (or equivalent)

Conbraco	40–200–	3/4", 1", 1 1/2", 2"
Febco	825Y, 825YA–	3/4", 1", 1 1/2", 2"
Hersey	FRP2–	3/4", 1", 1 1/2", 2"
Watts	U–909–QT or U–009–QT	3/4", 1", 1 1/2", 2"
Wilkens	975XLU	3/4", 1", 1 1/2", 2"

APPROVED INSTALLATION OF REDUCED–PRESSURE–PRINCIPAL DEVICE

1. ABOVE GROUND

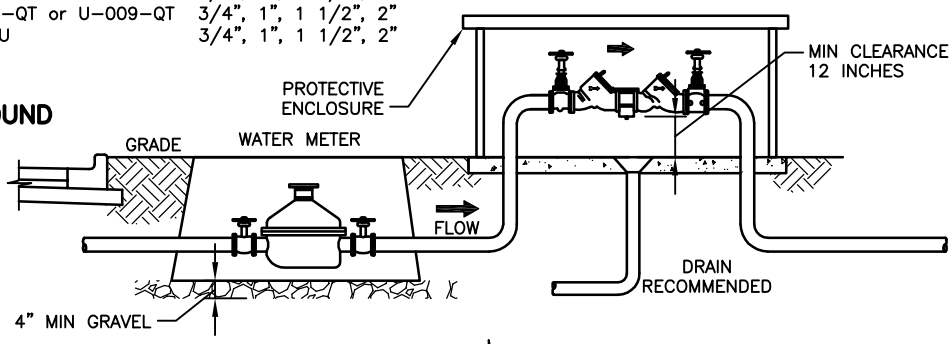

2. IN BUILDING

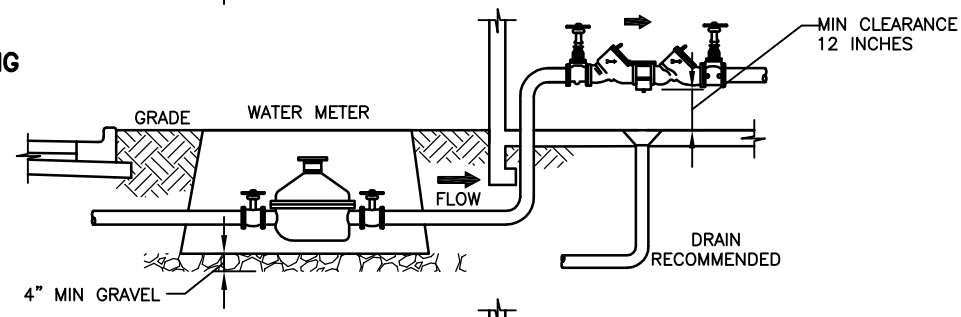

3. IN BASEMENT

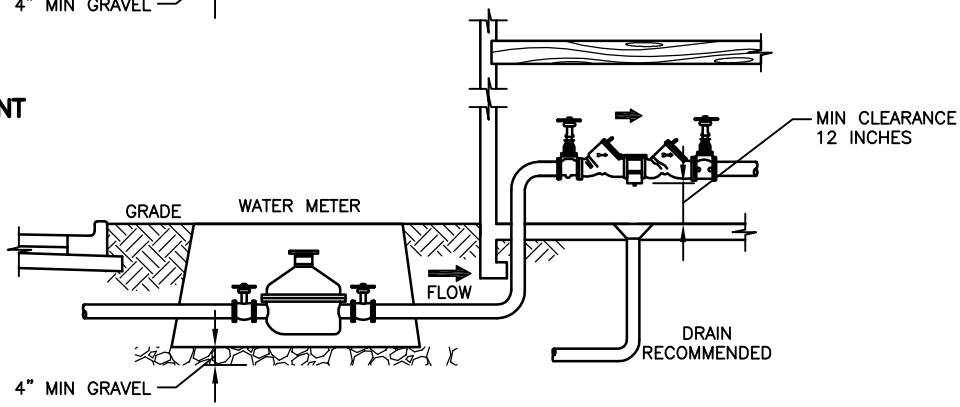

DEKALB COUNTY, GA.
Department of Watershed Management

STANDARD DETAILS

RPZ BFP Installation 3/4" to 2"

NOT TO SCALE

11/07

DETAIL NO. W-014

H:\Atlanta Workshare\Dekalb County - W_WW Stds\4.0 Project Engineering\4.1 CAD Design\Dekalb STD-Details\13.00_CAD\Water_Standard_Details\015 RPZ BFP Installation 2.5 Inches And Larger.dwg, SHT2 3 inch and above, 12/19/

MINIMUM CONTAINMENT PROTECTION REQUIREMENT
NEW CONSTRUCTION AND RETROFIT INSTALLATIONS
SIZE: 2 1/2 INCH AND ABOVE SERVICE METER SIZE: 3 INCH AND ABOVE
REDUCED PRESSURE ZONE (RPZ) BACKFLOW PREVENTER ASSEMBLY

SPECIFICATIONS: The CUSTOMER/OWNER shall furnish and install a REDUCED PRESSURE ZONE BACKFLOW PREVENTER (RPZ BFP) in a size to match that of the required service. The RPZ BFP assembly shall be provided with an epoxy coated, resilient seated flanged outside stem and yoke gate valve near the inlet and outlet sides of the device. The device shall be provided with three ball valve test cocks fitted with brass or plastic threaded plugs. A fourth test cock shall also be provided on the upstream side of the inlet shut-off valve. The device and valve bodies shall be equivalent to cast iron, coated inside and out with FDA approved fused epoxy coating and assembled with bolts that are resistant to electrolysis. All interior components of the checking device shall be equivalent to bronze and/or stainless steel construction and be accessible for maintenance and repair.

NOTE: All components of the assembly shall be certified by a nationally recognized testing laboratory. The RPZ BFP device shall have current approval from the University of Southern California, foundation for Cross Connection Control and Hydraulic Research (USC-FCCHR). Assembly to be individually factory tested, shipped and installed as a unit.

INSTALLATION INSTRUCTIONS: The RPZ BFP assembly shall not be installed below ground. If installed outdoors, an above ground enclosure must be provided for protection from freezing temperatures. Indoor installations shall be readily accessible for testing and maintenance and may not be installed any higher than 6 feet from the floor. Install an approved drain with an air gap where relief zone discharge could cause water damage. No connection will be allowed between the service meter and a BFP used for system containment unless this connection is protected by an approved BFP.

CAUTION: Section 607.3, Thermal Expansion Control, of the International Plubming Code, 2006, as adopted by the Georgia State Plumbing Code (combined 2007 and 2008 Amendments) should be incorporated in the design of installations and duly noted on all applicable drawings prior to the installation of any inline checking device(s).

DEVICE TESTING: All RPZ assemblies shall be tested at time of installation and at least annually thereafter.

INSTALLATION INSPECTION AND DEVICE TESTING: Contact Cross-Connection Control Specialist at 770-414-2354 for installation inspection and device testing.

APPROVED DEVICES: (or equivalent)

Ames	4000-RD	4", 6", 8", 10"
Conbraco	40-200	3", 4", 6", 8", 10"
Febco	860	3", 4", 6", 8"
Hersey	6CM	3", 4", 6", 8", 10"
Watts	909-RW	3", 4", 6", 8", 10"
Wilkens	975	3", 4", 6", 8"

APPROVED INSTALLATION OF REDUCED-PRESSURE-PRINCIPAL DEVICE

1. ABOVE GROUND

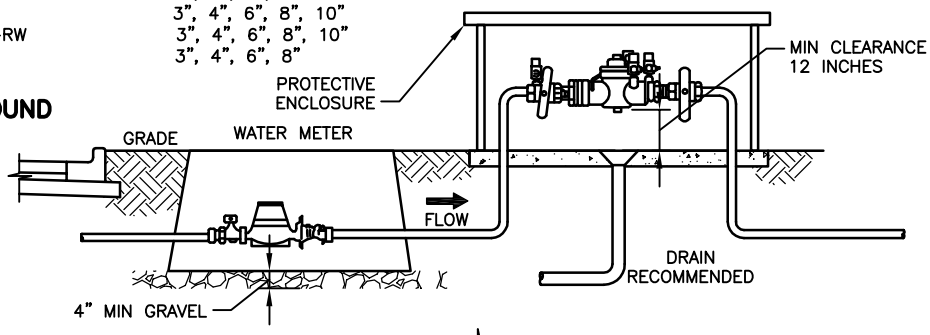

2. IN BUILDING

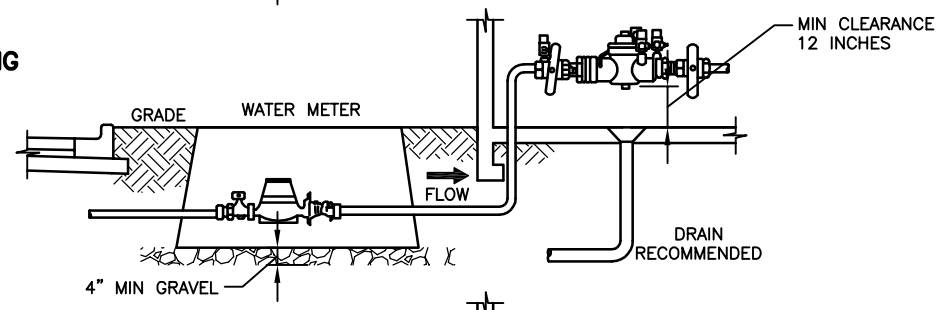

3. IN BASEMENT

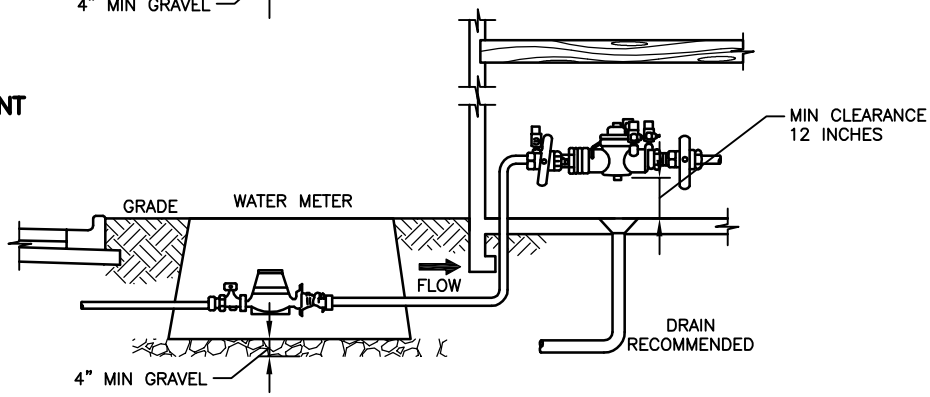

DEKALB COUNTY, GA.
Department of Watershed Management

STANDARD DETAILS

RPZ BFP Installation 2 1/2 Inches And Larger

NOT TO SCALE

11/07

DETAIL NO. W-015

H:\Atlanta Workshare\Dekalb County - W_WW Stds\4.0 Project Engineering\4.1 CAD Design\Dekalb STD-Details\13.00_CAD\Water_Standard_Details\016 DCV BFP Installation .75 to 2 Inches Detail.dwg, SHT3 through 2 inch, 12/18/2007

MINIMUM CONTAINMENT PROTECTION REQUIREMENT
NEW CONSTRUCTION AND RETROFIT INSTALLATIONS
SERVICE SIZE: THROUGH 2" METER SIZE: THROUGH 2"
DOUBLE CHECK VALVE (DCV) ASSEMBLY

SPECIFICATIONS: The CUSTOMER/OWNER shall furnish and install a DOUBLE CHECK VALVE ASSEMBLY (DCV) BACKFLOW PREVENTER (BFP) in a size to match that of the required service meter. The DCV BFP assembly shall include a full port ball valve on the inlet and outlet sides with a union or swivel coupling nut between the device and each valve. The device shall have three ball valve test cocks in the vertical position fitted with brass or plastic plugs. A fourth test cock shall be provided on the upstream side of the inlet shut-off valve. All components of the assembly shall be equivalent to bronze or stainless steel construction and assembled with bolts that are resistant to electrolysis. Access to both checking devices shall be by top and/or side entry for maintenance and repair of all interior parts. Valve handles shall turn up to close and inboard (90 degrees) to open.

NOTE: All components of the assembly shall be certified by a nationally recognized testing laboratory. The DCV device shall have current approval from the University of Southern California, foundation for Cross Connection Control and Hydraulic Research (USC-FCCHR). Assembly to be individually factory tested, shipped and installed as a unit.

INSTALLATION INSTRUCTIONS: The DCV BFP assembly shall not be buried in earth but installed in a utility box adjacent to or as close as practical to the outlet side of the meter installation. This assembly must be centered in the enclosure. Under NO circumstances will any connection be allowed between the service meter and a BFP used for system containment unless this connection is protected by an approved BFP. At the bottom of these instructions you will find an excerpt from the Georgia State Plumbing Code on Thermal Expansion.

APPROVED UTILITY BOXES: (OR EQUIVALENT):

Carson Industries	Model No. 1324CP2PGWL
CDR Systems Corp	Model No. WA101324-18
Brooks Products, Inc	Model No. 1324

DEVICE TESTING: All DCV assemblies shall be tested at time of installation and at least ANNUALLY thereafter. Contact Cross-Connection Control Specialist, at 770-414-2354 for installation inspections and device tests.

APPROVED DEVICES: (or equivalent)

Conbraco	40-100 3/4", 1", 1 1/2", 2" (with unions)
Febco	805Y 3/4" - 1", 1 1/2", 2" (with unions)
Hersey	FDC- 3/4", 1", 1 1/2", 2" (with unions)
Watts	U-007-QT 3/4", 1", 1 1/2", 2"
Wilkens	950XLY - 3/4", 1", 1 1/2", 2"

TYPICAL UTILITY BOX INSTALLATION

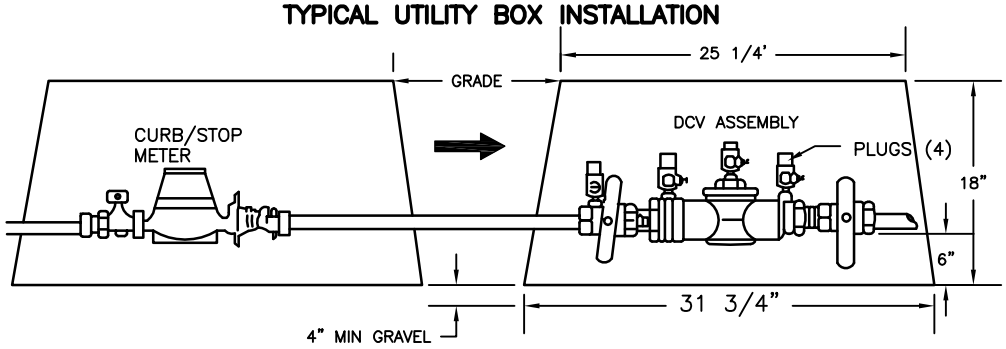

NOTE: FOR FINAL APPROVAL ASSEMBLY MUST BE CENTERED IN UTILITY BOX.

*** SPECIAL CAUTION ***

INTERNATIONAL PLUMBING CODE, 2006, ADOPTED BY GEORGIA STATE PLUMBING CODE (2007 AND 2008 AMENDMENTS)

Section 607.3 Thermal Expansion Control
A means of controlling increased pressure caused by thermal expansion shall be provided where required in accordance with Sections 607.3.1 and 607.3.2.

607.3.1 Pressure-reducing valve.
For water service system sizes up to and including 2 inches (51 mm), a device for controlling pressure shall be installed where, because of thermal expansion, the pressure on the downstream side of a pressure-reducing valve exceeds the pressure-reducing valve setting.

607.3.2 Backflow prevention device or check valve.
Where a backflow prevention device, check valve or other device is installed on a water supply system utilizing storage water heating equipment such that thermal expansion causes an increase in pressure, a device for controlling pressure shall be installed.

DEKALB COUNTY, GA. Department of Watershed Management	**STANDARD DETAILS**	11/07
	DCV BFP installation 3/4 Inch to 2 Inch	
	NOT TO SCALE	DETAIL NO. W-016

H:\Atlanta Workshare\Dekalb County - W_WW Stds\4.0 Project Engineering\4.1 CAD Design\Dekalb STD-Details\13.00_CAD\Water_Standard_Details\017 Temporary Disinfection Jumper Installation Detail.dwg, Layout1, 12/18/2007 10:2

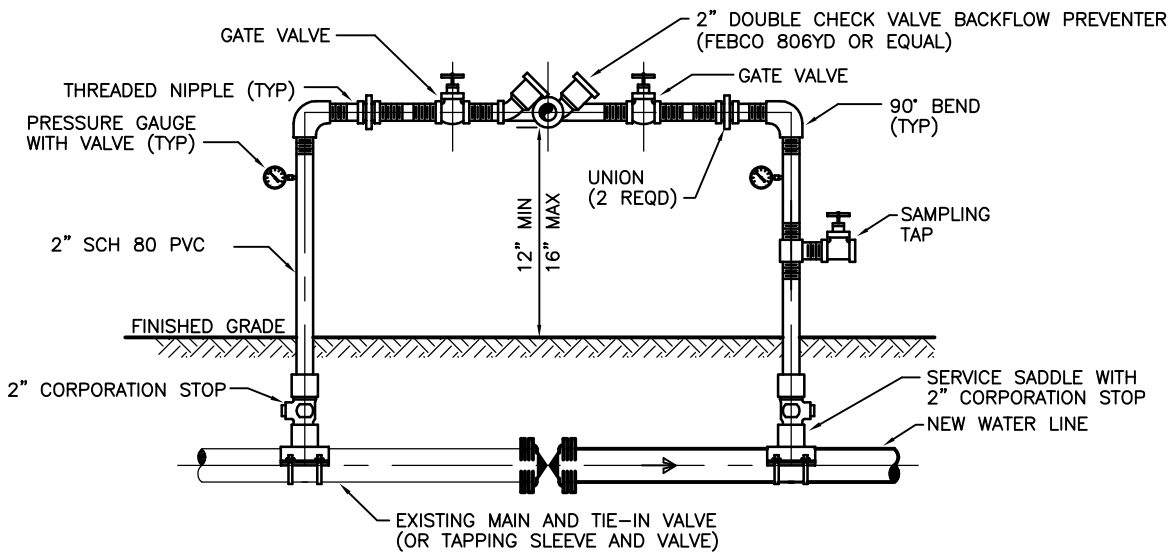

NOTES:

1. A TEMPORARY JUMPER CONNECTION IS REQUIRED AT ALL CONNECTIONS BETWEEN EXISTING ACTIVE WATER MAINS AND PROPOSED WATER MAINS.

2. THIS DETAIL IS TO BE USED FOR FILLING ANY NEW WATER MAIN AND FOR FLUSHING OF NEW MAINS UP TO 8" DIAMETER (2.5 FPS MINIMUM VELOCITY), AND FOR BACTERIOLOGICAL SAMPLING POINTS AT THE ENDS OF THE PROPOSED MAINS. THE JUMPER CONNECTIONS SHALL BE MAINTAINED UNTIL AFTER FILLING, FLUSHING, TESTING, AND DISINFECTION OF THE PROPOSED MAIN HAS BEEN SUCCESSFULLY COMPLETED AND CLEARANCE FOR USE FROM THE DCDWM HAS BEEN RECEIVED. THIS JUMPER CONNECTION SHALL ALSO BE USED TO MAINTAIN A MINIMUM PRESSURE OF 20 PSI IN THE PROPOSED MAINS AFTER DISINFECTION AND UNTIL THE CLEARANCE LETTER IS OBTAINED.

3. FLUSHING OF THE 10" DIAMETER AND LARGER WATER MAIN MAY BE DONE THROUGH THE TIE-IN VALVE UNDER VERY CONTROLLED CONDITIONS, AS FOLLOWS:

   A. THE TIE-IN VALVES SHALL BE OPERATED AND PRESSURE TESTED IN THE PRESENCE OF DCDWM AND ENGINEER TO VERIFY WATER TIGHTNESS PRIOR TO TIE-IN. VALVES WHICH ARE NOT WATERTIGHT SHALL BE REPLACED.

   B. THE TEMPORARY JUMPER CONNECTION SHALL BE CONSTRUCTED AS DETAILED. THE JUMPER CONNECTION SHALL BE USED TO FILL THE NEW MAIN AND FOR BACTERIOLOGICAL SAMPLING OF THE NEW MAIN AS REQUIRED BY THE DCDWM PERMIT.

      – FLUSHING SHALL NOT BE ATTEMPTED DURING PEAK DEMAND HOURS OF THE EXISTING WATER MAINS.

      – ALL DOWNSTREAM VALVES IN THE NEW SYSTEM MUST BE OPEN PRIOR TO OPENING THE TIE-IN VALVE.

      – MONITOR THE PRESSURE AT THE TIE-IN POINT. THE PRESSURE IN THE EXISTING MAIN MUST NOT DROP BELOW 35 PSI.

      – TIE-IN VALVE SHALL BE OPENED A FEW TURNS ONLY ENSURING A PRESSURE DROP ACROSS THE VALVE IS ALWAYS GREATER THAN 10 PSI.

   C. THE TIE-IN VALVE SHALL BE LOCKED CLOSED UNTIL FLUSHING BEGINS.

   D. THE TIE-IN VALVE SHALL BE OPENED ONLY FOR FLUSHING OF THE NEW MAIN. THE PROCEDURE SHALL BE DIRECTED BY THE DCDWM.

   E. AFTER FLUSHING, THE TIE-IN VALVE SHALL BE CLOSED AND LOCKED IN THE CLOSED POSITION.

4. THE CONTRACTOR SHALL PROVIDE DOCUMENTATION DEMONSTRATING THAT THE DOUBLE CHECK VALVE BACKFLOW PREVENTION DEVICE HAS BEEN TESTED AND IS IN GOOD WORKING ORDER AT THE TIME OF INSTALLATION.

5. EXCEPT AS REQUIRED TO FLUSH LINES GREATER THAN 8" IN DIAMETER, THE TIE-IN VALVE SHALL REMAIN LOCKED CLOSED UNTIL THE NEW SYSTEM HAS BEEN CLEARED FOR USE BY ALL PERTINENT AGENCIES.

6. UPON RECEIPT OF CLEARANCE FOR USE FROM DCDWM, THE CONTRACTOR SHALL REMOVE THE TEMPORARY JUMPER CONNECTION. STOPS ARE TO BE CLOSED AND PLUGGED WITH 2" BRASS PLUGS.

7. ALL INSTALLATION AND MAINTENANCE OF THE TEMPORARY JUMPER CONNECTION AND ASSOCIATED BACKFLOW PREVENTION DEVICE, FITTINGS, VALVE, ETC. SHALL BE THE RESPONSIBILITY OF THE CONTRACTOR.

DEKALB COUNTY, GA. Department of Watershed Management	**STANDARD DETAILS**	11/07
	Temporary Disinfection Jumper Installation Detail	
	NOT TO SCALE	DETAIL NO. W-017

H:\Atlanta Workshare\Dekalb County - W_WW Stds\4.0 Project Engineering\4.1 CAD Design\Dekalb STD-Details\13.00_CAD\Water_Standard_Details\018 Intersection Detail Valve Locations.dwg, Layout1, 12/18/2007 10:21:00 AM, eolive

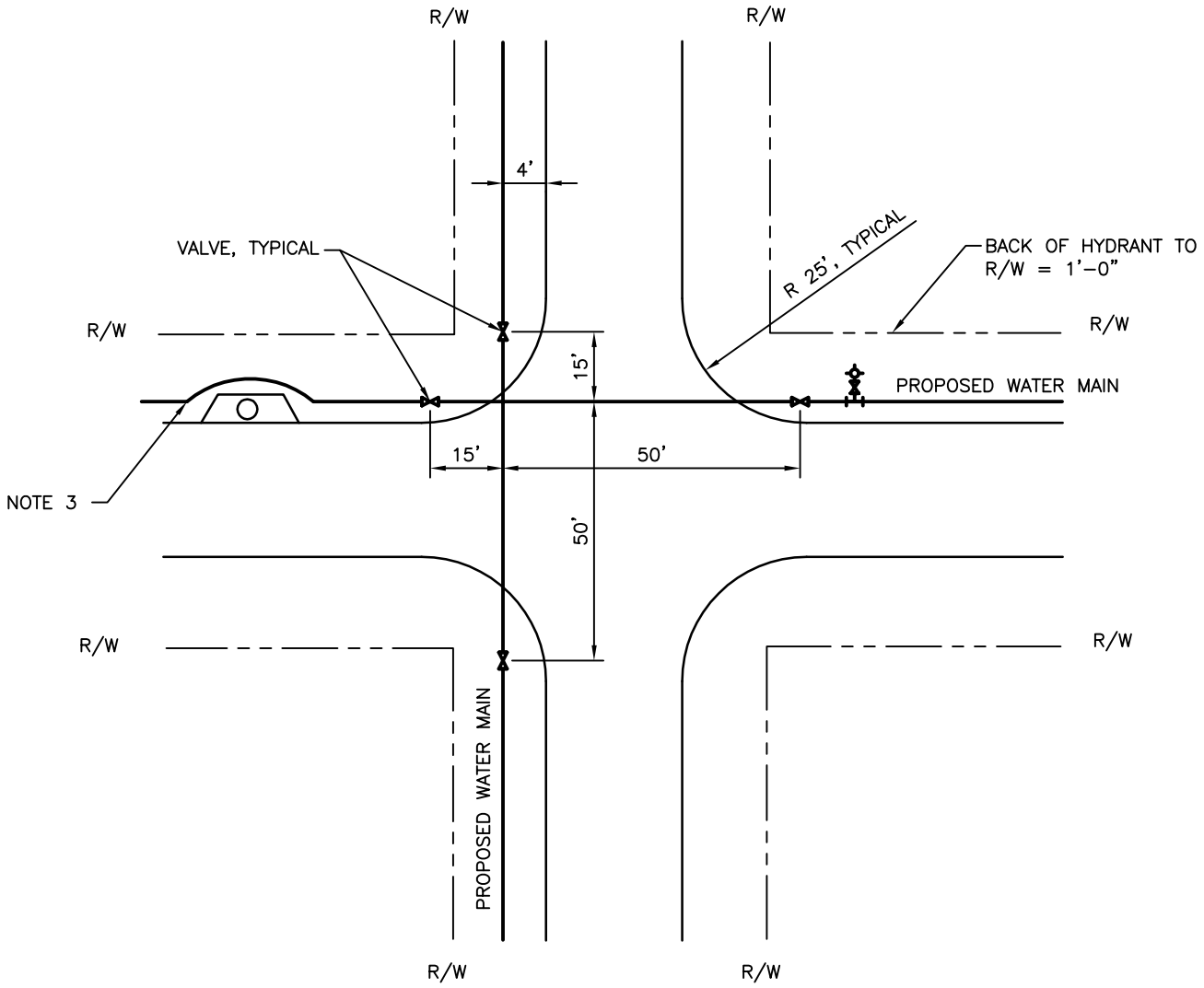

NOTES:

1. IF RADIUS IS NOT 25' ADJUST PIPE LENGTHS SO THAT VALVES ARE NOT IN STREET.
2. VALVES TO BE A MINIMUM OF 2'-0" FROM BACK OF CURB TO TOP SECTION OF BOX CONCRETE COLLAR. SEE DETAIL W-29.
3. WHEN GOING AROUND CATCH BASIN, USE 3 JOINTS OF PIPE, CENTERED, AND CHANGE ALIGNMENT BY DEFLECTING EACH JOINT. MAXIMUM DEFLECTION TO BE NO MORE THAN 4 DEGREES PER JOINT. PIPE SHALL CLEAR OUTSIDE WALL OF CATCH BASIN BY 4" MINIMUM.

DEKALB COUNTY, GA. Department of Watershed Management	**STANDARD DETAILS**	11/07
	Intersection Detail Valve Locations	
	NOT TO SCALE	DETAIL NO. W-018

H:\Atlanta Workshare\Dekalb County - W_WW Stds\4.0 Project Engineering\4.1 CAD Design\Dekalb STD-Details\13.00_CAD\Water_Standard_Details\019 Backfill and Allowable Trench Widths Detail.dwg, Layout1, 2/22/2008 2:17:01 PM,

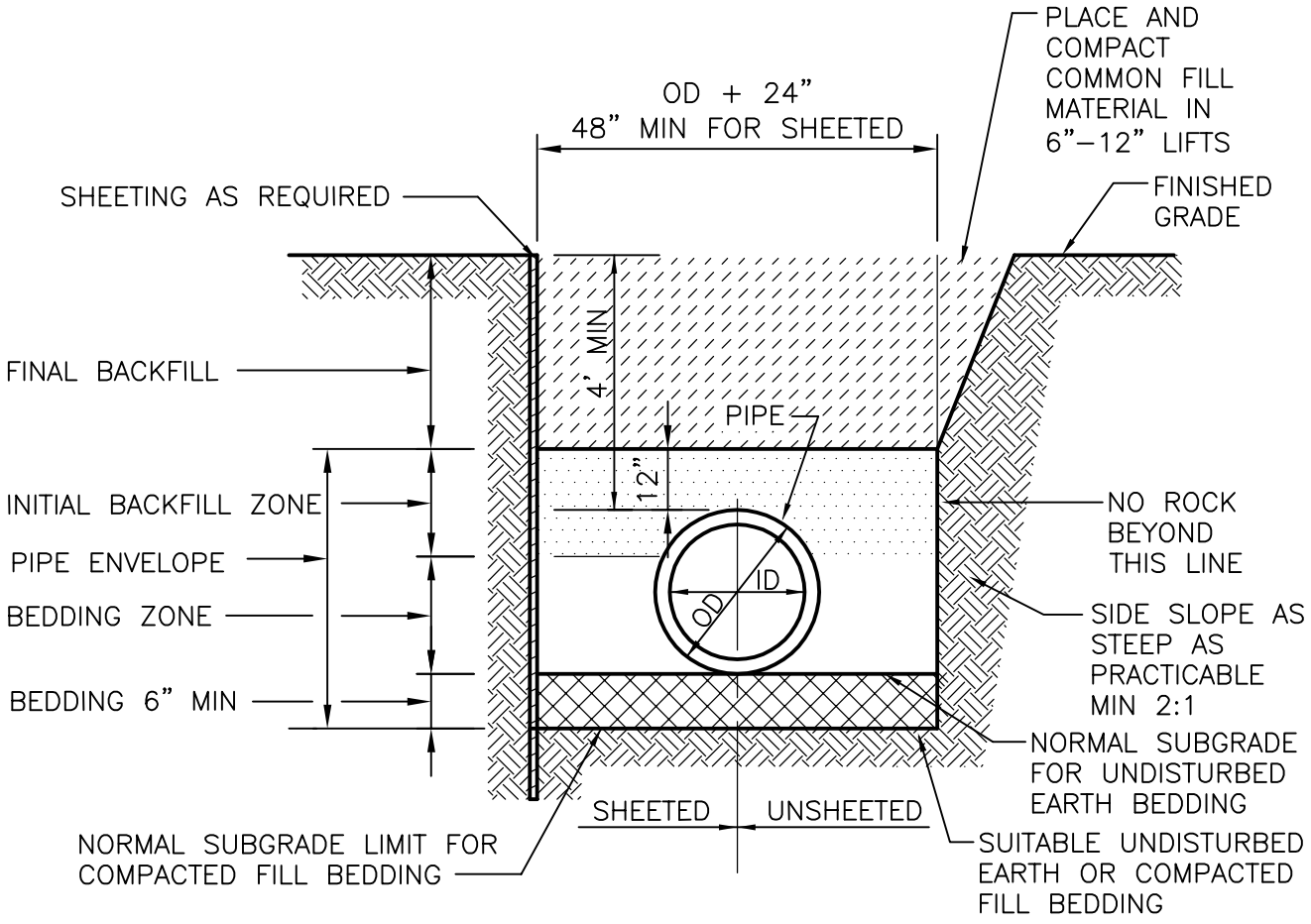

NOTES:

1. SEE DESIGN STANDARDS FOR ADDITIONAL BEDDING AND TRENCH BACKFILL REQUIREMENTS.
2. DEPTH OF COVER OVER WATER MAINS SHALL BE 4'–0" AS MEASURED FROM TOP OF PAVEMENT TO TOP OF PIPE.
3. MINIMUM 6" COMPACTED SOIL BETWEEN BOTTOM OF PIPE AND ROCK.
4. NO ROCK IN BACKFILL FOR FIRST 2'–0" ABOVE TOP OF PIPE.
5. BEDDING AND BACKFILL TO BE NO. 57 STONE UNDER ROADWAYS AND PAVED AREAS.
6. BEDDING TO BE GDOT TYPE II FOUNDATION BACKFILL.
7. BACKFILL TO BE FREE OF ORGANICS, OBJECTIONABLE MATERIAL AND STONES LARGER THAN 6" IN ITS LONGEST DIMENSION.

DEKALB COUNTY, GA. Department of Watershed Management	**STANDARD DETAILS**	11/07
	Backfill and Allowable Trench Widths Detail	WATER Matters
	NOT TO SCALE	DETAIL NO. W-019

H:\Atlanta Workshare\Dekalb County - W_WW Stds\4.0 Project Engineering\4.1 CAD Design\Dekalb STD-Details\13.00_CAD\Water_Standard_Details\020 Typical Blow-Off Detail.dwg, Layout1, 12/18/2007 10:23:00 AM, eolivera, Test

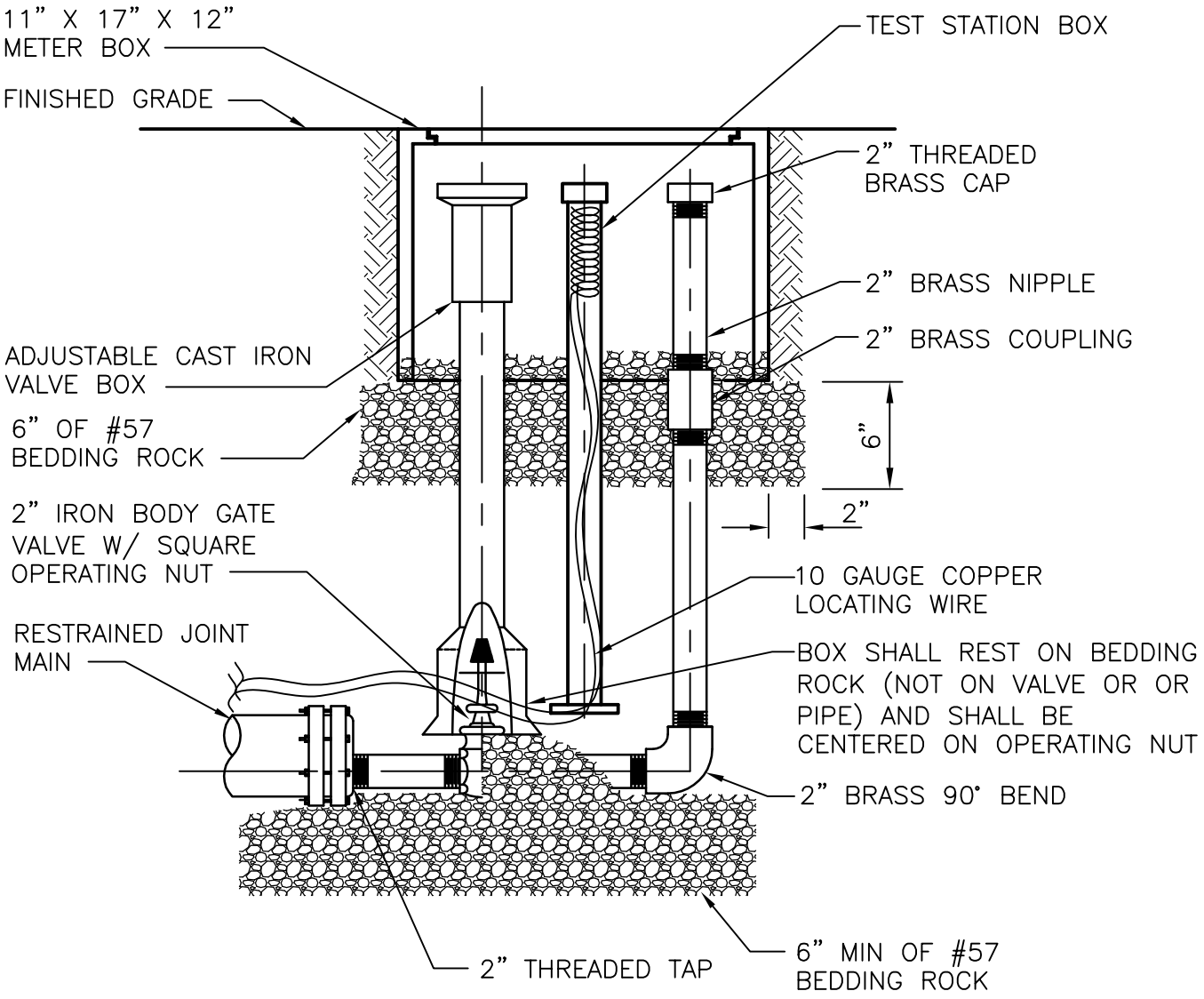

NOTES:

1. SEE DESIGN STANDARDS FOR 2" BRASS PIPE AND FITTING REQUIREMENTS.

DEKALB COUNTY, GA. Department of Watershed Management	**STANDARD DETAILS**	11/07
	Typical Blow-off Detail	
	NOT TO SCALE	DETAIL NO. W-020

H:\Atlanta Workshare\Dekalb County - W_WW Stds\4.0 Project Engineering\4.1 CAD Design\Dekalb STD-Details\13.00_CAD\Water_Standard_Details\021 Repair Sleeve Detail.dwg, Layout1, 12/18/2007 10:23:35 AM, eolivera, Test

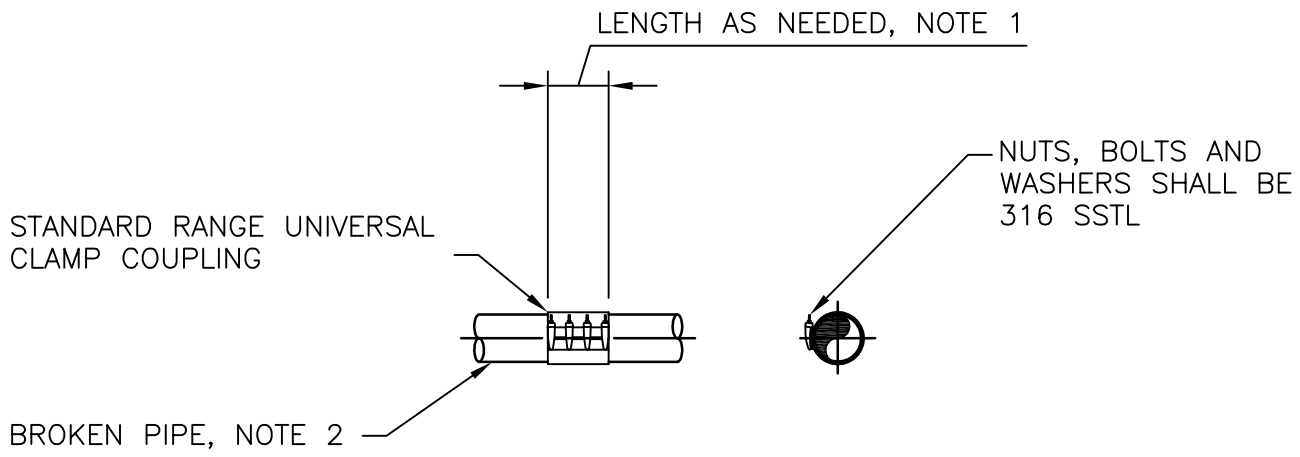

NOTES:

1. LENGTHS AS AVAILABLE FROM SPECIFIC MANUFACTURERS VARY AND MAY RANGE FROM 6 INCHES TO 30 INCHES.

2. UNVERSAL CLAMP COUPLINGS ARE FOR THE REPAIR OF ASBESTOS–CEMENT, CAST IRON, DUCTILE IRON, STEEL AND PVC PIPE.

3. PRESSURE RANGES GENERALLY VARY FROM 150 psi TO OVER 500 psi DEPENDING ON FITTING LENGTH AND APPLICATION. SEE SPECIFIC MANUFACTURERS FOR SPECIFIC PRESSURE RATINGS.

DEKALB COUNTY, GA. Department of Watershed Management	**STANDARD DETAILS**	11/07
	Repair Sleeve Detail	
	NOT TO SCALE	DETAIL NO. W-021

H:\Atlanta Workshare\Dekalb County - W_WW Stds\4.0 Project Engineering\4.1 CAD Design\Dekalb STD-Details\13.00_CAD\Water_Standard_Details\022 Thrust Restraint Tie-rod Installation Detail.dwg, Layout1, 12/18/2007 10:24:11 AM

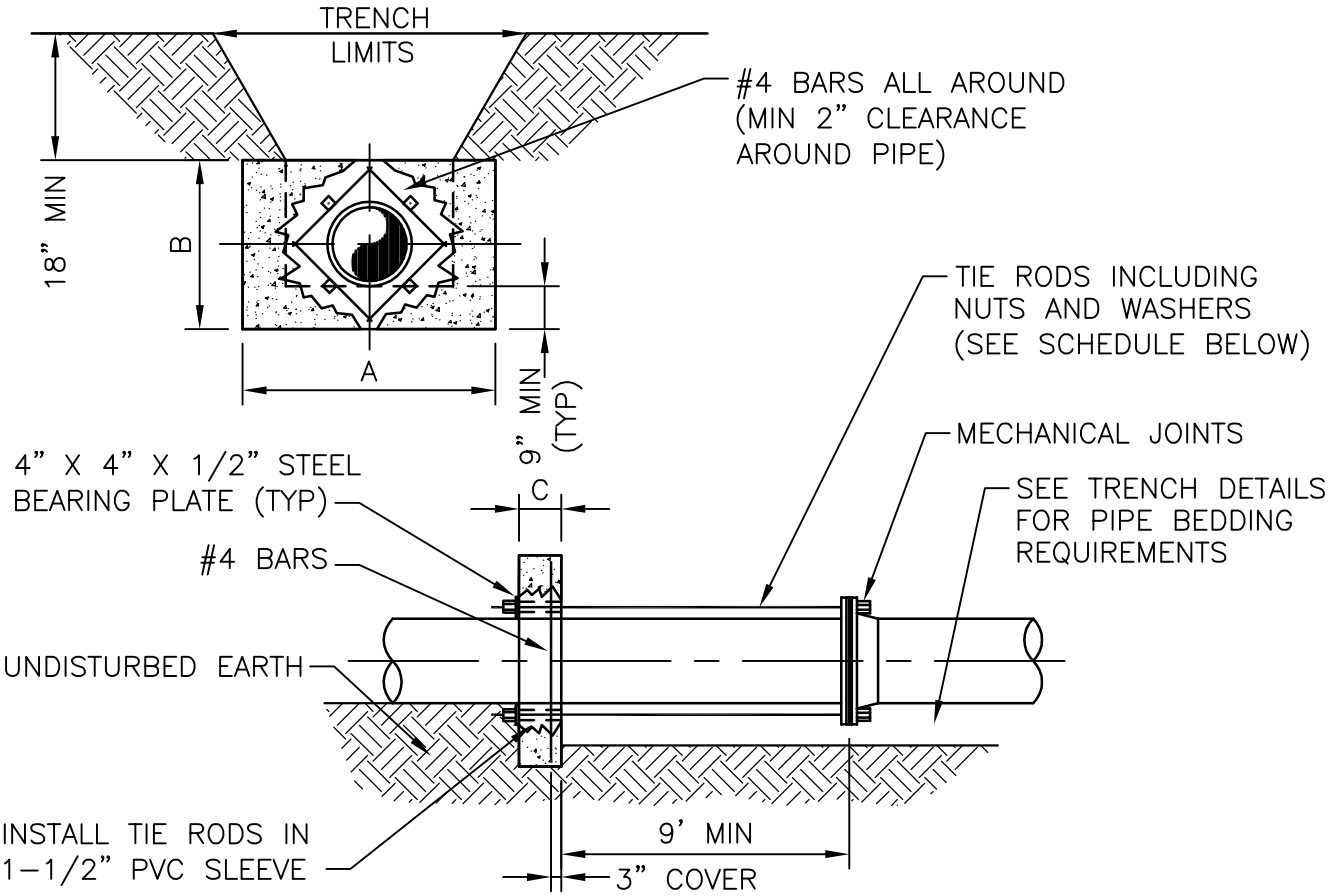

SCHEDULE OF DIMENSIONS AND MATERIALS					
PIPE SIZE (INCHES)	DIMENSIONS (FT.)			TIE RODS REQ'D	
	A	B	C	DIA.	NO.
6	2.0	2.0	1.0	3/4	2
8	2.5	2.5	1.0	3/4	2
10	3.5	3.0	1.0	3/4	2
12	5.0	3.0	1.0	3/4	2
16	6.0	4.0	1.5	3/4	4
20	8.0	5.0	1.5	3/4	6
24	9.0	6.0	1.5	3/4	8
NOTE: THRUST COLLAR AREAS TO BE COMPUTED ON BASIS OF 2000 LBS/SF SOIL RESTRAINT BEARING.					

NOTES:
1. ADDITIONAL REINFORCEMENTS SHALL BE AS SPECIFIED BY THE ENGINEER.
2. MINIMUM COMPRESSIVE STRENGTH FOR CONCRETE SHALL BE 3000 PSI.
3. BEDDING, BACKFILL AND COMPACTION SHALL BE AS SPECIFIED ELSEWHERE IN THE STANDARDS.
4. ALL FORM BOARDS SHALL BE REMOVED PRIOR TO BACKFILL.
5. NO ALLOWANCE SHALL BE MADE FOR FRICTION BETWEEN THE PIPE WALL AND THE THRUST COLLAR.
6. DESIGN PRESSURE:150 PSI.

DEKALB COUNTY, GA.
Department of Watershed Management

STANDARD DETAILS

Thrust Restraint (150 psi)
Tie-rod Installation Detail

NOT TO SCALE

11/07

DETAIL NO. W-022

H:\Atlanta Workshare\Dekalb County - W_WW Stds\4.0 Project Engineering\4.1 CAD Design\Dekalb STD-Details\13.00_CAD\Water_Standard_Details\023 Air Release Valve Installation Detail.dwg, Layout1, 12/18/2007 10:25:02 AM, eoliv

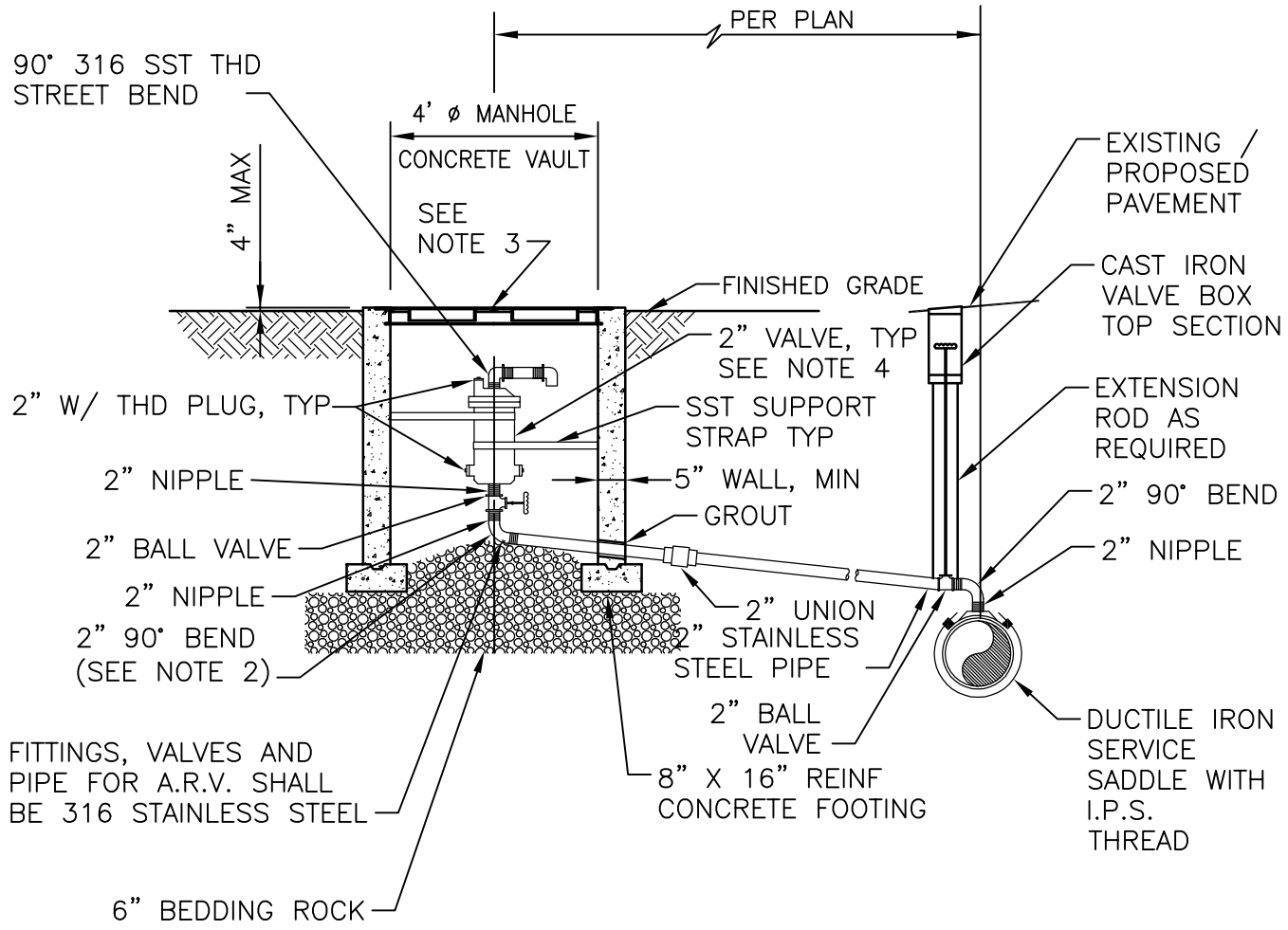

NOTES:

1. ABOVE DETAIL IS BASED ON 2" AIR RELEASE VALVE. CHANGE PIPE AND FITTINGS ACCORDINGLY FOR OTHER VALVE SIZES AND TYPES. VALVE SIZES SHALL BE DETERMINED BY THE DEVELOPER'S ENGINEER AND APPROVED BY DCDWM PRIOR TO INSTALLATION.
2. THE MINIMUM DIMENSION FROM INVERT TO FINISHED GRADE SHALL BE 4.0 FEET.
3. FRAME AND COVER SHALL BE EQUIVALENT TO U.S. FOUNDRY USF 170-E-ORS.
4. FOR POTABLE WATER AND REUSE WATER MAINS, VALVE SHALL BE APCO #200 (2") OR EQUIVALENT.

DEKALB COUNTY, GA. Department of Watershed Management	**STANDARD DETAILS**	11/07
	Air Release Valve Installation Detail	
	NOT TO SCALE	DETAIL NO. W-023

H:\Atlanta Workshare\Dekalb County - W_WW Stds\4.0 Project Engineering\4.1 CAD Design\Dekalb STD-Details\13.00_CAD\Water_Standard_Details\024 Casing And Pipe Support Installation Detail.dwg, Layout1, 12/18/2007 10:26:02 AM

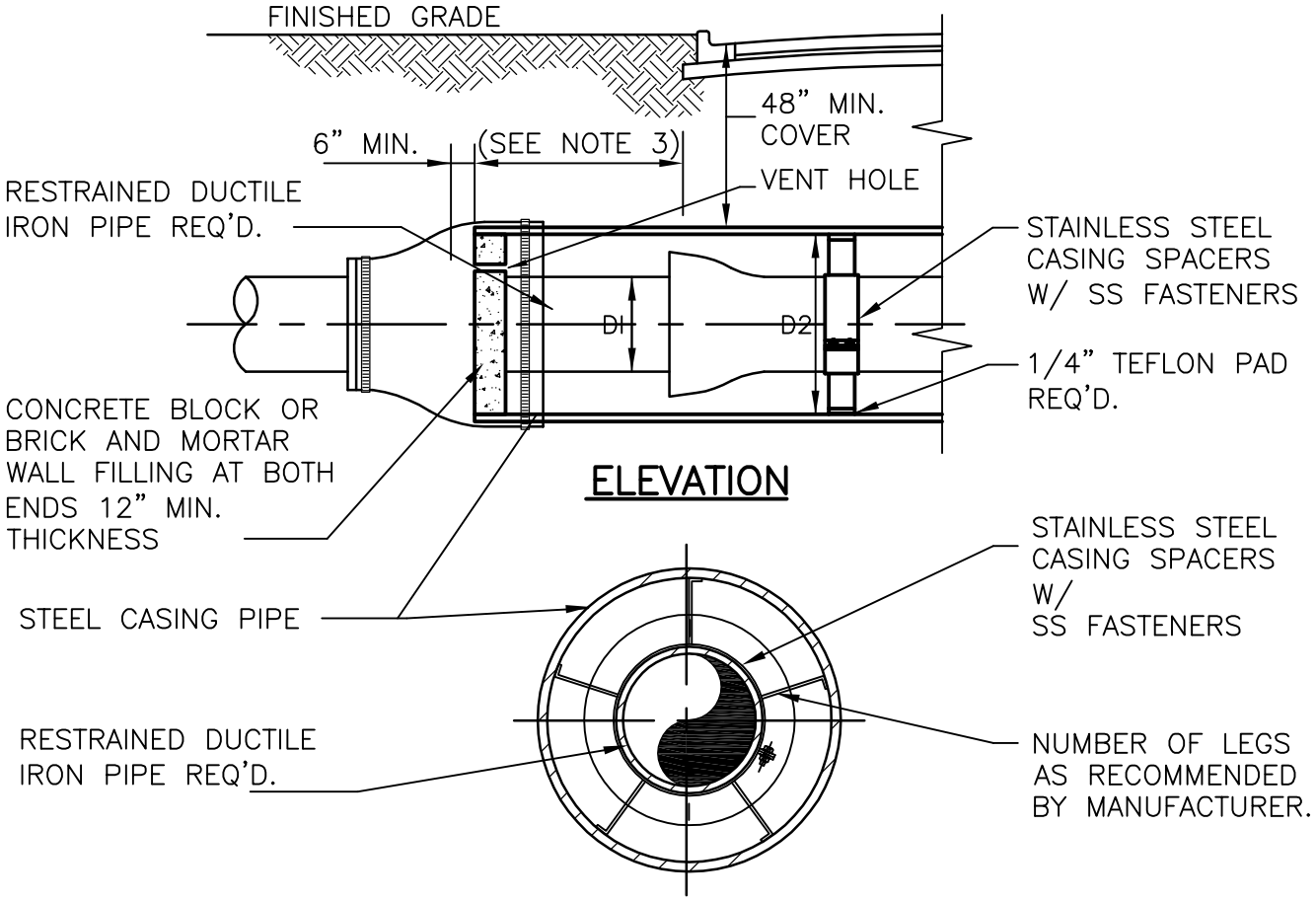

SECTION

CARRIER PIPE AND CASING PIPE SIZES (MIN.)										
CARRIER PIPE NOM. DIA. (DI)	2	4	6	8	10	12	14	16	20	24
CASING PIPE NOM. DIA. (D2)	6	14	16	18	20	22	24	30	32	36
WALL THICKNESS (IN.) COATED	0.250	0.250	0.250	0.250	0.281	0.312	0.344	0.406	0.438	0.469
WALL THICKNESS (IN.) UNCOATED	0.282	0.282	0.313	0.313	0.344	0.375	0.407	0.469	0.501	0.532

NOTES:

1. STAINLESS STEEL CASING SPACERS ARE REQUIRED AS SHOWN.
2. WHERE PRACTICAL, CASING SHALL EXTEND A MIN. OF 8' BEYOND EDGE OF PAVEMENT OR LONGER AS REQUIRED BY LOCAL PERMITTING AGENCIES.
3. A MINIMUM OF 3 CASING SPACERS PER 20 LINEAR FEET OF INSTALLED CARRIER PIPE SHALL BE PROVIDED.

DEKALB COUNTY, GA.
Department of Watershed Management

STANDARD DETAILS

Casing And Pipe Support Installation Detail

NOT TO SCALE

11/07

DETAIL NO. W-024

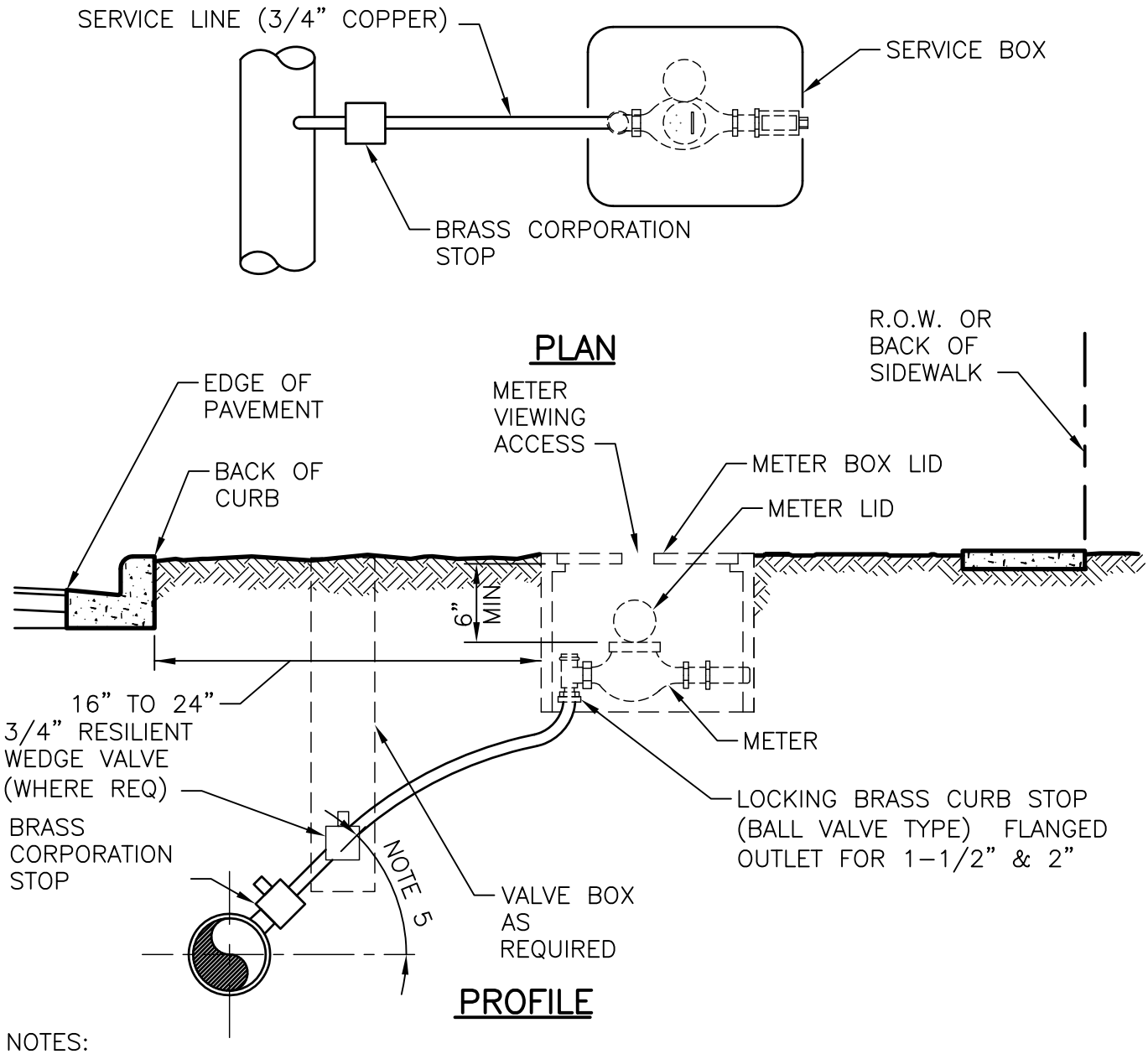

NOTES:

1. METER SHALL BE INSTALLED BETWEEN SIDEWALK AND CURB AND IN NO CASE SHALL IT BE INSTALLED IN SIDEWALK OR OTHER PAVED AREAS.
2. ALL POTABLE WATER IRRIGATION METERS REQUIRE AN APPROVED BACKFLOW PREVENTER.
3. ALL PROPERTIES WITH ALTERNATIVE WATER SYSTEMS (WELL, ETC.) REQUIRE BACKFLOW PREVENTERS.
4. SERVICE LINES SHALL NOT BE LESS THAN METER SIZE.
5. SERVICE TAP SHALL BE BETWEEN 2:00 O'CLOCK AND 4:00 O'CLOCK WITHOUT SADDLE TAP.

DEKALB COUNTY, GA. Department of Watershed Management	**STANDARD DETAILS**	07/08
	Residential Water Meter Installation Detail	WATER Matters
	NOT TO SCALE	DETAIL NO. W-026

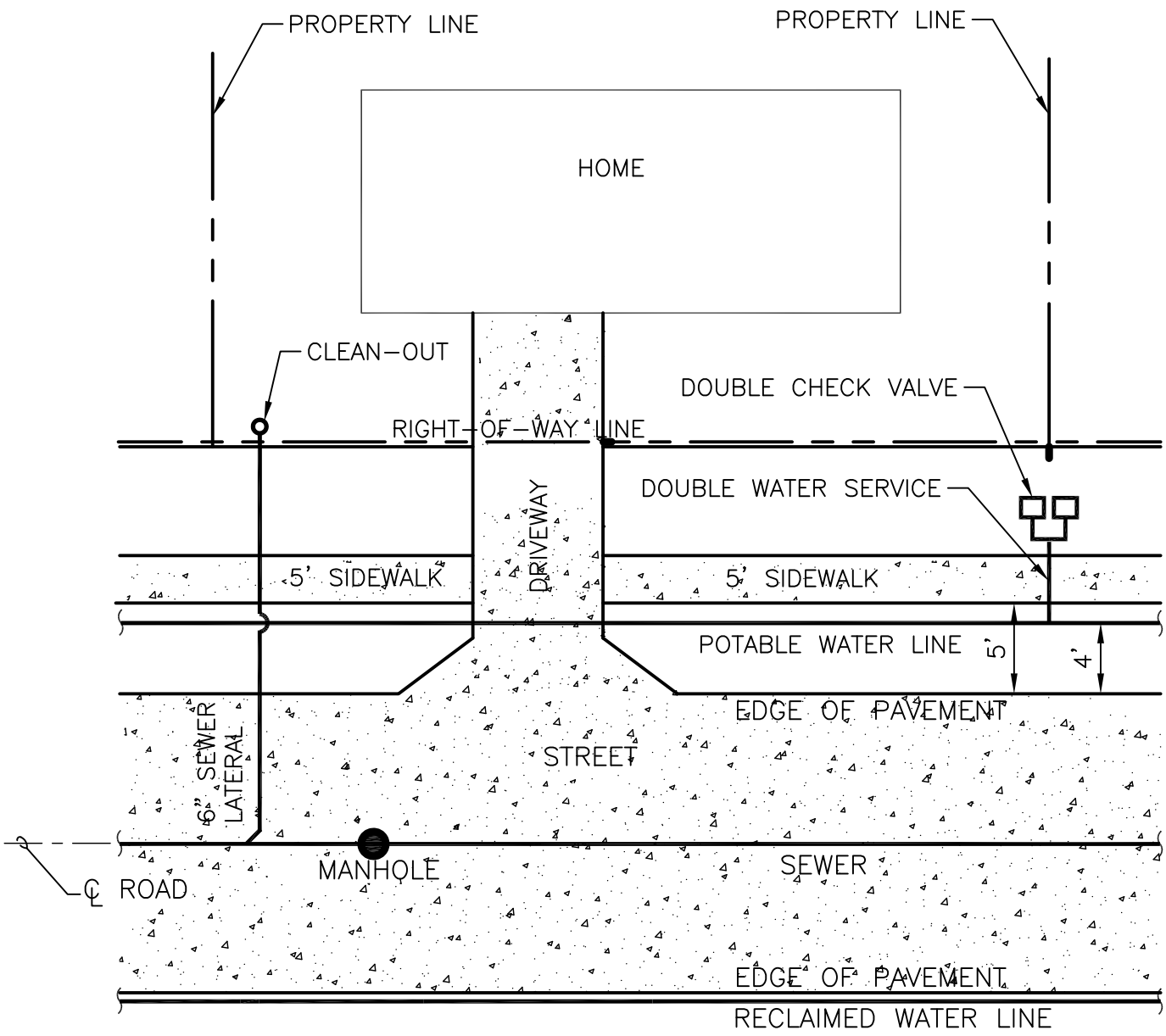

NOTE:

1. A 3' BY 3' AREA OF "GREEN SPACE SHALL BE ALLOTTED PER EACH WATER METER. METERS SHALL NOT BE LOCATED WITHIN PAVED AREAS.

DEKALB COUNTY, GA. Department of Watershed Management	**STANDARD DETAILS**	07/08
	Water Meter Locations Detail	
	NOT TO SCALE	DETAIL NO. W-025

H:\Atlanta Workshare\Dekalb County - W_WW Stds\4.0 Project Engineering\4.1 CAD Design\Dekalb STD-Details\13.00_CAD\Water_Standard_Details\027 Typical Patch and Resurfacing Detail.dwg, Layout1, 12/18/2007 10:40:48 AM, eol

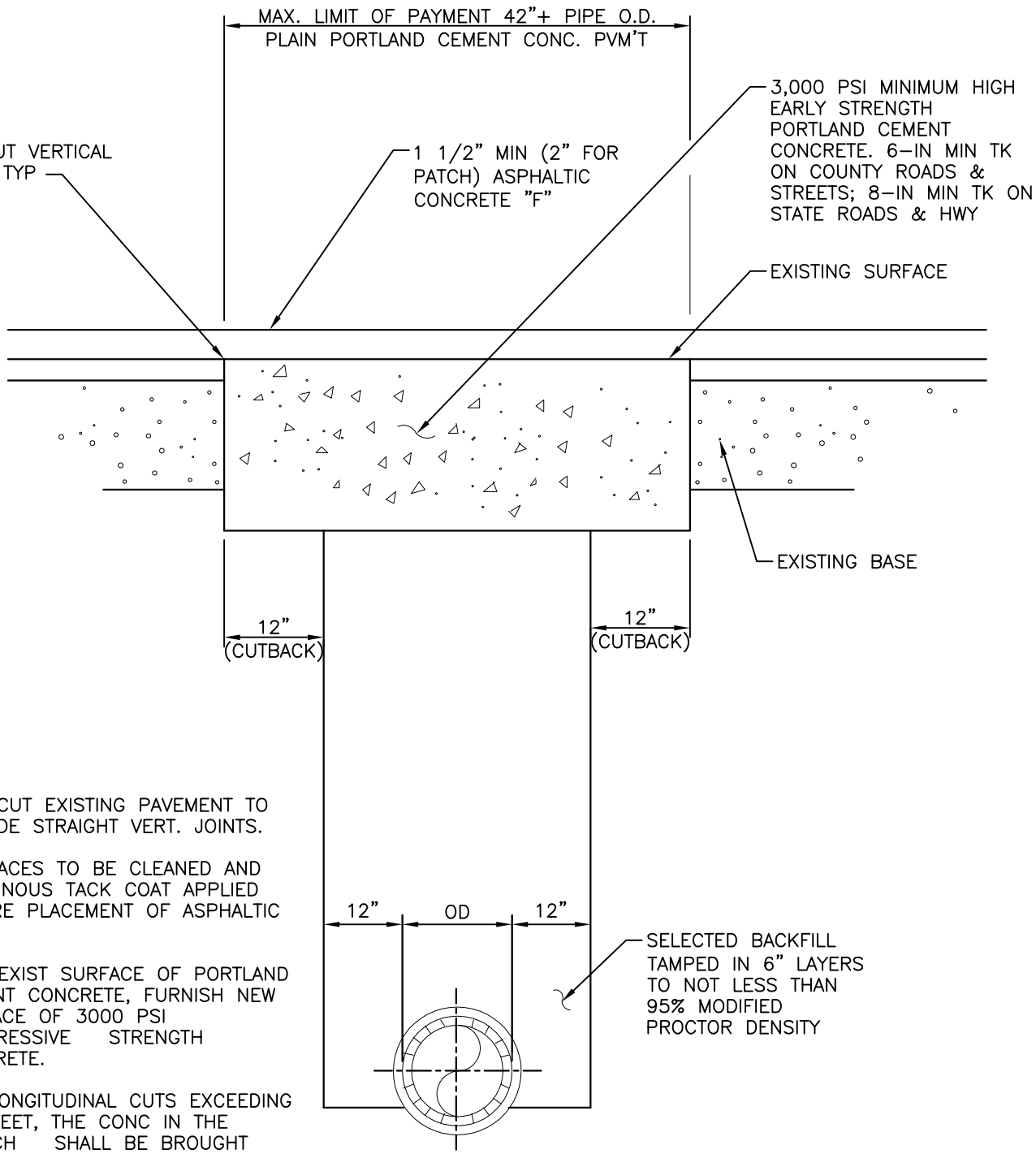

NOTES :

1. SAW CUT EXISTING PAVEMENT TO PROVIDE STRAIGHT VERT. JOINTS.
2. SURFACES TO BE CLEANED AND BITUMINOUS TACK COAT APPLIED BEFORE PLACEMENT OF ASPHALTIC TOP.
3. FOR EXIST SURFACE OF PORTLAND CEMENT CONCRETE, FURNISH NEW SURFACE OF 3000 PSI COMPRESSIVE STRENGTH CONCRETE.
4. ON LONGITUDINAL CUTS EXCEEDING 150 FEET, THE CONC IN THE TRENCH SHALL BE BROUGHT FLUSH WITH THE EXISTING PAVEMENT AND THE ENTIRE WIDTH OF ROADWAY RESURFACED W/ 1-IN MIN TK OF ASPHALTIC CONC.

DEKALB COUNTY, GA. Department of Watershed Management	STANDARD DETAILS	11/07
	Typical Patch and Resurfacing Detail	
	NOT TO SCALE	DETAIL NO. W-027

H:\Atlanta Workshare\Dekalb County - W_WW Stds\4.0 Project Engineering\4.1 CAD Design\Dekalb STD-Details\13.00_CAD\Water_Standard_Details\028 Temporary Water Sample Station Detail.dwg, Layout1, 12/18/2007 10:41:57 AM, e

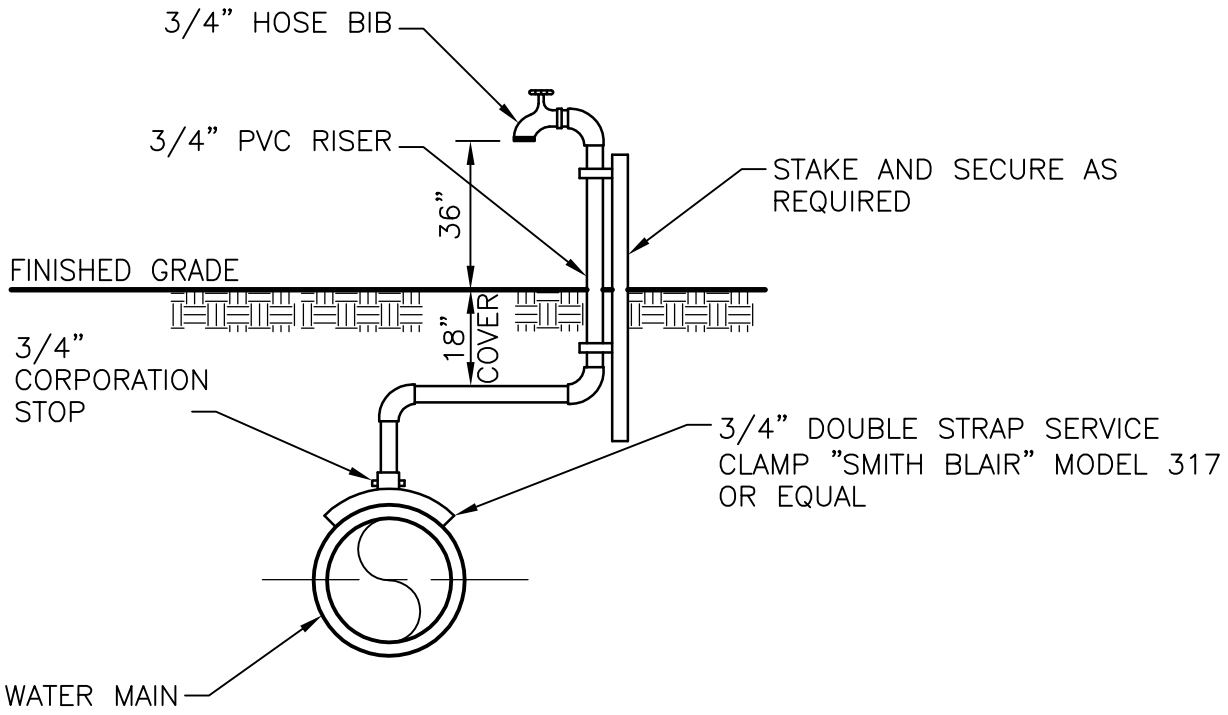

NOTES:

1. CONTRACTOR SHALL REMOVE SAMPLE POINT ASSEMBLY TO 3/4" CORPORATION STOP AND PLUG UPON WRITTEN ACCEPTANCE OF DISINFECTION BY DCDWM.

DEKALB COUNTY, GA. Department of Watershed Management	**STANDARD DETAILS**	11/07
	Temporary Water Sample Station Detail	
	NOT TO SCALE	DETAIL NO. W-028

H:\Atlanta Workshare\Dekalb County - W_WW Stds\4.0 Project Engineering\4.1 CAD Design\Dekalb STD-Details\13.00_CAD\Water_Standard_Details\029 Valve Cover and Marker Disc.dwg, Layout1, 12/18/2007 10:42:41 AM, eolivera, Te

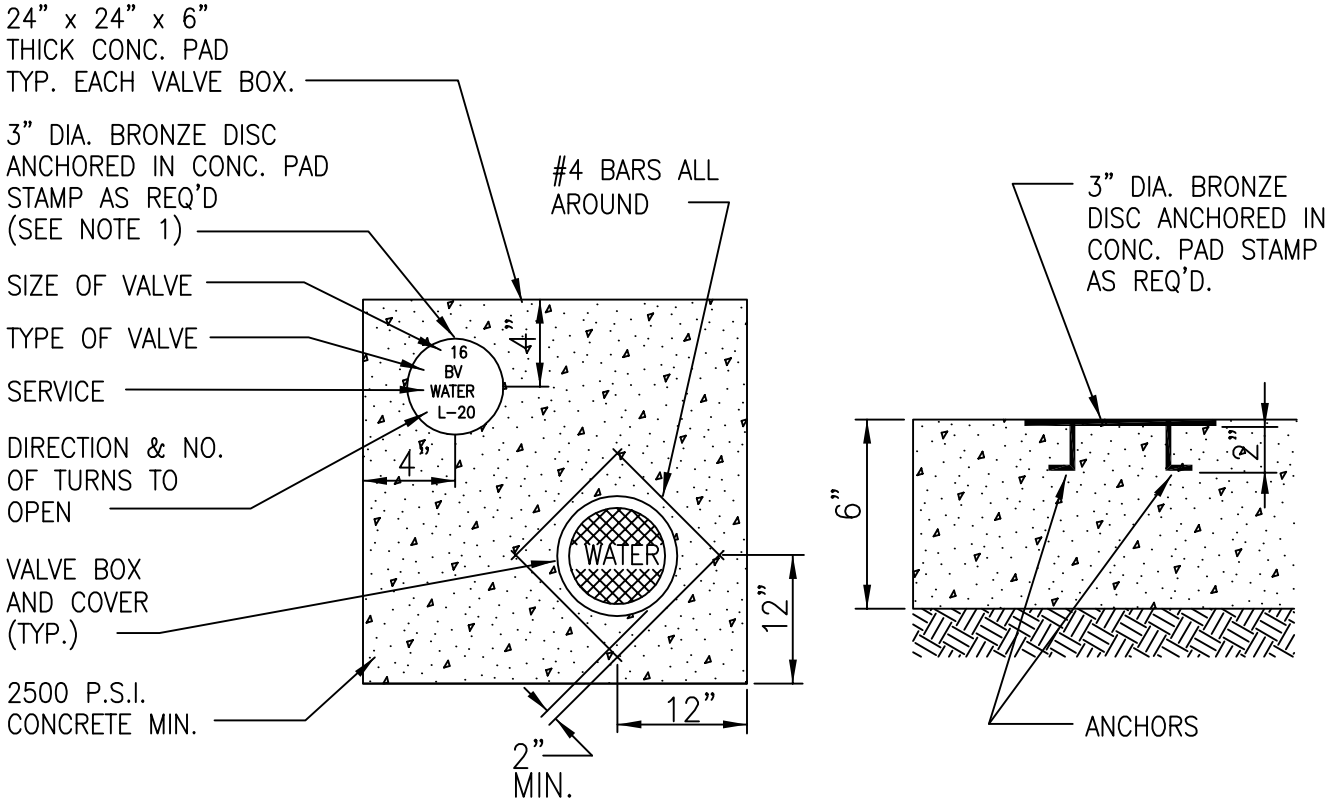

UNIMPROVED CONDITION

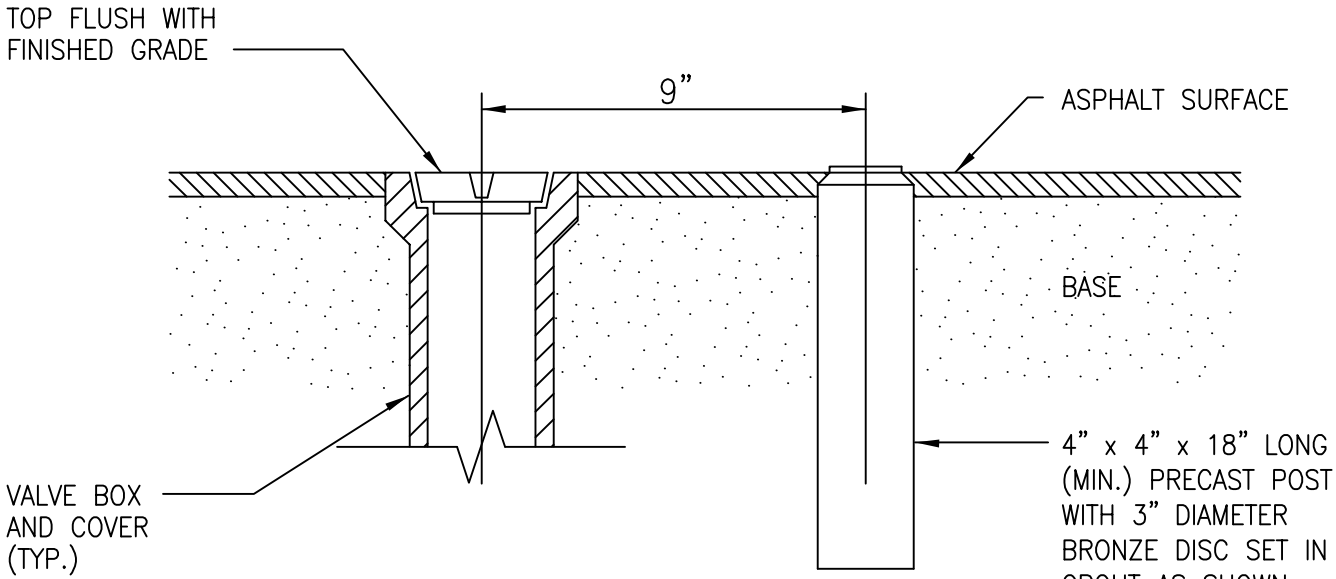

IMPROVED CONDTITION

NOTES:

1. BRONZE IDENTIFICATION DISC SHALL BE REQUIRED FOR ALL VALVES 16" AND LARGER, OR AS REQUIRED BY DCDWM.
2. VALVE COLLAR DIMENSIONS MAY BE REDUCED TO 18" X 18" X 6" WHEN THE BRONZE IDENTIFICATION DISC IS NOT REQUIRED.

DEKALB COUNTY, GA. Department of Watershed Management	**STANDARD DETAILS**	11/07
	Valve Cover and Marker Disc	WATER Matters
	NOT TO SCALE	DETAIL NO. W-029

LEGEND – HYDRANT BONNET COLORS
B – BLUE FLANGE
G – GREEN FLANGE
R – RED FLANGE
W – WHITE FLANGE

NOTE:
COLOR CODE FOR FIRE HYDRANTS ALONG STREETS DEPENDANT ON SIZE OF WATER MAIN AND IF WATER MAIN DEAD ENDS.

CIRCULATED WATER MAINS

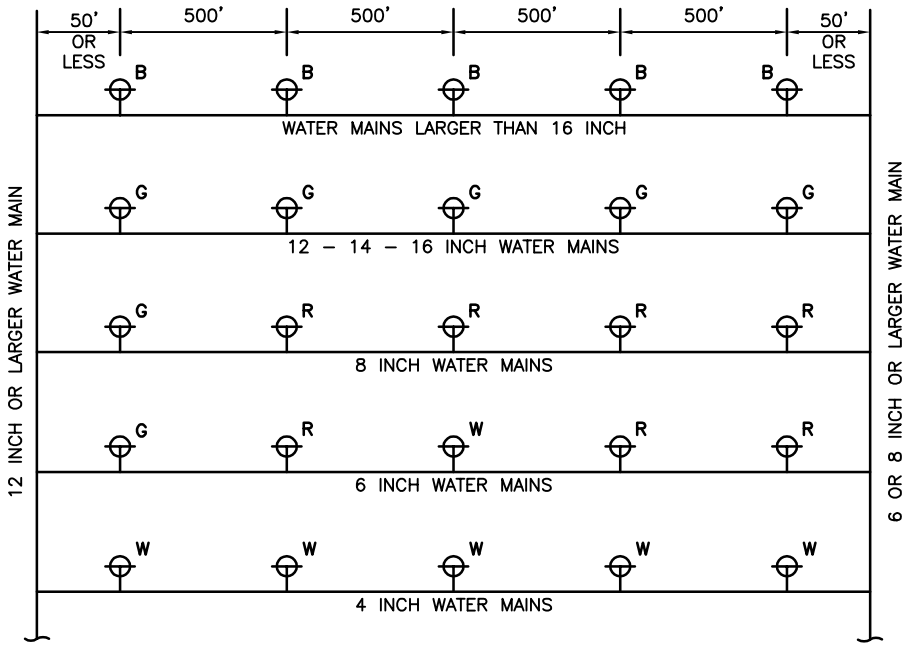

UNCIRCULATED WATER MAINS – DEAD ENDS

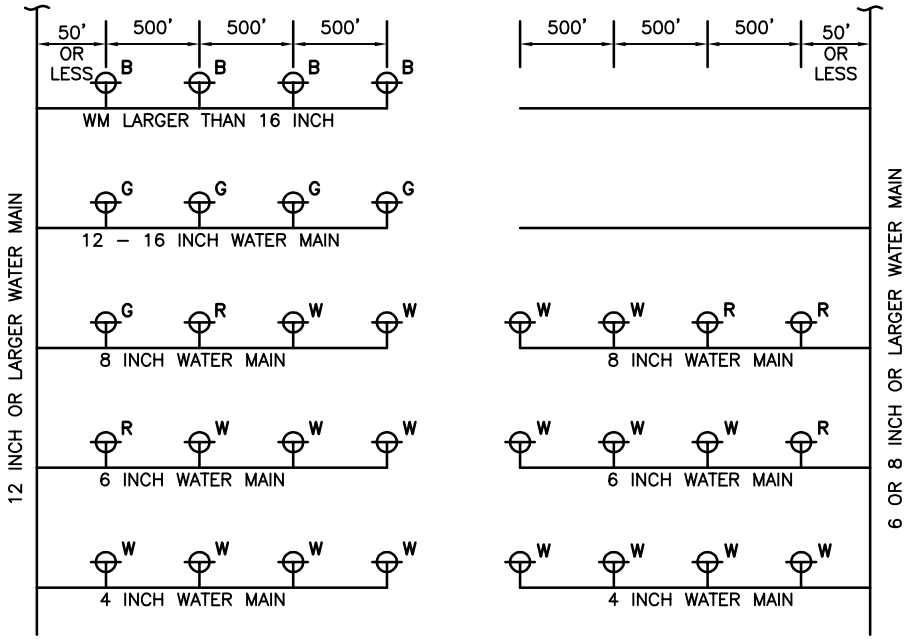

DEKALB COUNTY, GA.
Department of Watershed Management

STANDARD DETAILS

Color Code For Fire Hydrants

NOT TO SCALE

11/07

DETAIL NO. W-030

H:\Atlanta Workshare\Dekalb County - W_WW Stds\4.0 Project Engineering\4.1 CAD Design\Dekalb STD-Details\13.00_CAD\Water_Standard_Details\030 Color Code For Fire Hydrants.dwg, Layout1, 2/15/2008 3:55:01 PM, dking, Test

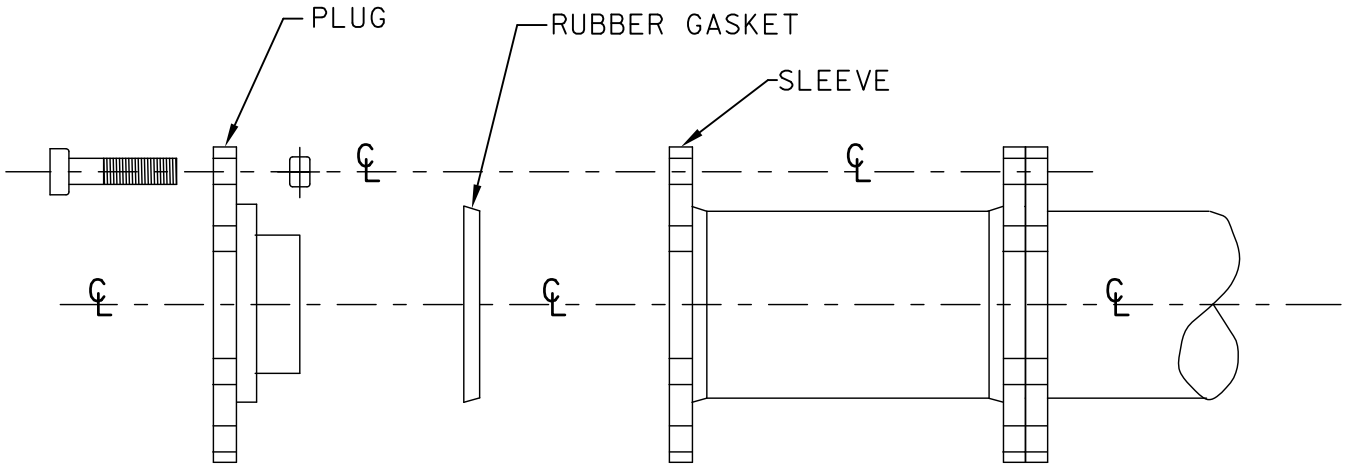

SIDE VIEW OF END-OF-LINE PLUG
AND SLEEVE ASSEMBLY

DEKALB COUNTY, GA.
Department of Watershed Management

STANDARD DETAILS

End of Water Line
Plug & Sleeve Assembly

NOT TO SCALE

07/08

DETAIL NO. W-031

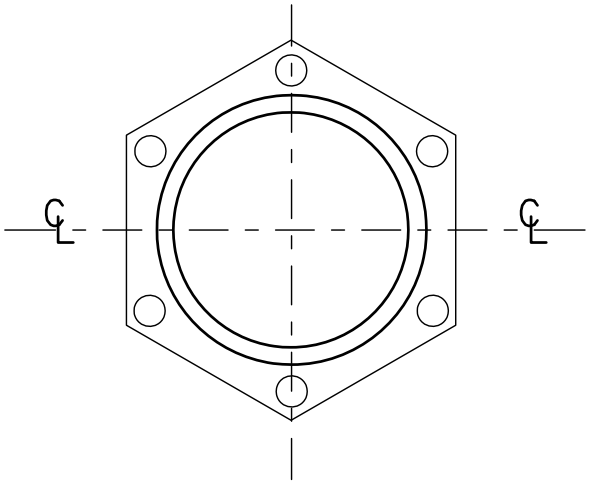

TOP VIEW OF SLEEVE

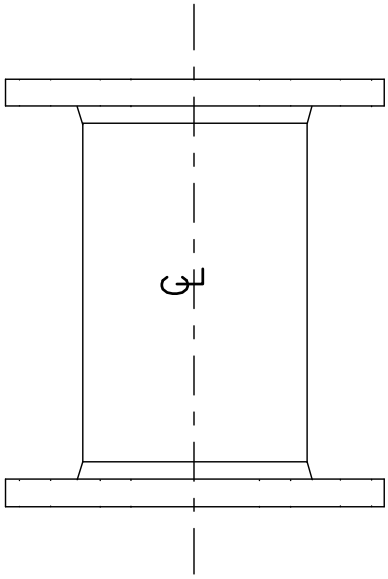

SIDE VIEW OF SLEEVE

DEKALB COUNTY, GA. Department of Watershed Management	**STANDARD DETAILS**	07/08
	End of Water Line Sleeve Detail	
	NOT TO SCALE	DETAIL NO. W-032

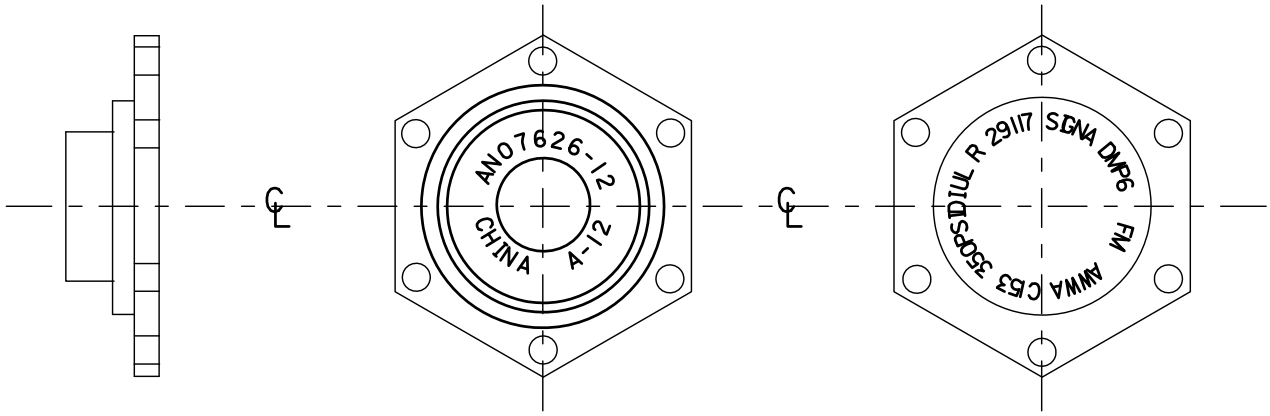

SIDE VIEW

BOTTOM VIEW

TOP VIEW

DEKALB COUNTY, GA.
Department of Watershed Management

STANDARD DETAILS

End of Water Line Plug

NOT TO SCALE

07/08

DETAIL NO. W-033

APPENDIX E

GEORGIA DEPARTMENT OF TRANSPORTATION: REFERENCE MATERIAL

Georgia Department of Transportation Permitting Checklist

To obtain a Georgia Department of Transportation Utility Encroachment Permit, please, contact the DeKalb County Department of Watershed Management Technical Service Division at 770-621-7200 or email a construction drawing to ladjohnson@co.dekalb.ga.us with the following information:

CONSTRUCTION DRAWING

- ☐ Right-of-Way Width
- ☐ Pavement Centerline and Width
- ☐ Distance to Curb
- ☐ North Arrow
- ☐ Location of proposed installation showing distances to nearest intersecting street
- ☐ Length, size, and type of utility
- ☐ Bore and Jack Pits (if required)
- ☐ Show posted speed limit
- ☐ Include an 8 ½ x 11 map of location.

Georgia Department of Transportation Requirements Checklist

WORK WITHIN GDOT RIGHT-OF-WAY

General

- ☐ All piping must be a minimum of four (4) feet below pavement.
- ☐ Traffic control must be in accordance with the manual on uniform traffic control devices, latest edition.
- ☐ Follow Pavement Patching Details (Standard 1401) for restoring GDOT pavement after pipe installation. (http://tomcat2.dot.state.ga.us)
- ☐ All jack and bore pits must be ten (10) feet from the edge of pavement.

Potable Water Main

- ☐ All work including furnishing materials for installing, relocating, and adjusting water distribution systems must be according to the Georgia Department of Transportation Standard Specification Section 670—Water Distribution System and Section 847- Miscellaneous Pipe. (http://tomcat2.dot.state.ga.us).
- ☐ All fire hydrants shall be relocated within five (5) feet of the right-of-way

STATE	PROJECT NUMBER	SHEET NO.	TOTAL SHEETS
GA.			

PICTORIAL SECTION

NO CONCRETE SIDEWALK

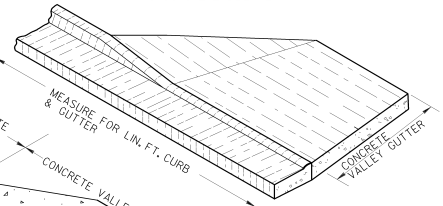

PICTORIAL SECTION

DRIVE & CONRETE SIDEWALK

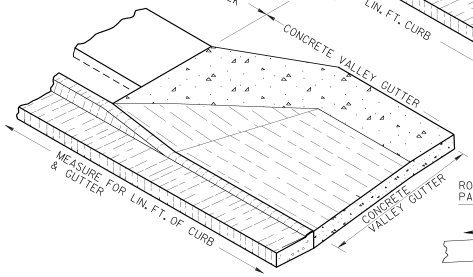

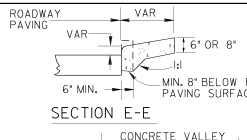

SECTION E-E

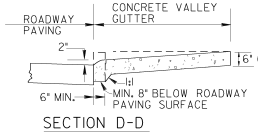

SECTION D-D

NOTE:
DETAILS NOT SHOWN FOR MODIFIED DRIVES WILL BE SIMILAR TO THAT SHOWN FOR STANDARD DRIVEWYS AT BOTTOM.

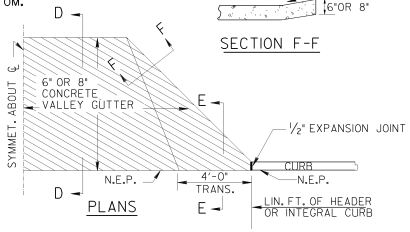

PLANS

DRIVE MODIFIED FOR HEADER OR INTEGRAL CURB ALONG ROADWAY

NOTE:
DRIVES WILL NOT BE SKEWED EXCEPT WHERE PERPENDICULAR ALIGNMENT IS NOT FEASIBLE.

SECTION F-F

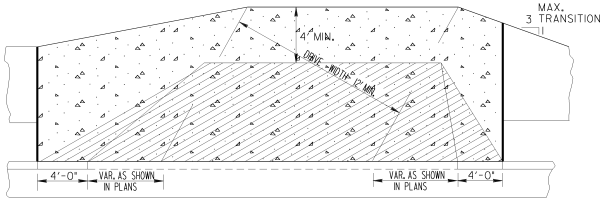

DRIVE ENTRANCE MODIFIED FOR SKEW

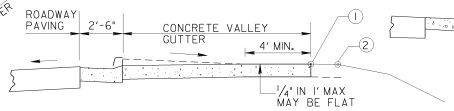

(SPECIAL CASE FOR SECTION B-B OR SECTION C-C: WHERE THE SHOULDER OR SIDEWALK IS SLOPED AWAY FROM THE ROAD)

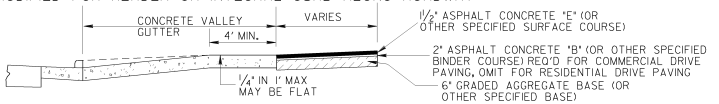

SECTION WITH ASPHALT PAVING

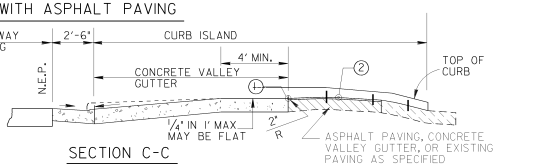

SECTION C-C

GENERAL NOTES:

1. QUANTITIES WILL BE MEASURED AS FOLLOWS:
   (A) CONCRETE CURB & GUTTER ALONG ROADWAY---
   LIN. FT. OF CURB & GUTTER WILL BE MEASURED FOR PAYMENT CONTINUOUS THRU THE DRIVE ENTRANCES. PAYMENT FOR CURB & GUTTER WILL INCLUDE DAPPING DOWN THE TOP PORTION OF THE CURB. SQ. YDS. OF CONCRETE VALLEY GUTTER WILL BE MEASURED FOR PAYMENT TO THE BACK OF THE CURB LINE.
   (B) HEADER (OR INTEGRAL) CURB ALONG ROADWAY---
   LIN. FT. OF CURB WILL BE MEASURED FOR PAYMENT TO THE BEGINNING OF DRIVE WAY. SQ. YDS. OF CONCRETE VALLEY GUTTER WILL BE MEASURED FOR PAYMENT TO THE EDGE OF THE ROADWAY PAVING.
2. N.E.P. IS DEFINED AS THE POINT WHERE THE ROADWAY PAVING MEETS THE CURB & GUTTER, OR HEADER CURB, OR FACE OR THE INTEGRAL CURB.
3. DRIVES RECONSTRUCTED SHALL BE REPLACED IN KIND, I.E, ASPHALT FOR ASPHALT, CONCRETE FOR CONCRETE, AND AGGREGATE SURFACE COARSE FOR EARTH.
4. SEE STANDARD 9032-B FOR DETAILS OF CONCRETE CURB & GUTTER, HEADER CURBS AND DOWELED INTEGRAL CURBS.
5. WIDTHS OF COMMERCIAL DRIVEWAYS WILL COMPLY WITH CURRENT "RULES AND REGULATIONS FOR DRIVEWAY AND ENCROACHMENT CONTROL". WIDTHS OF RESIDENTIAL NON-COMMERCIAL DRIVEWAYS WILL BE AS SPECIFIED IN THE PLANS.
6. THE SLOPE OF THE "TRANSITION AREA" OF THE CONCRETE VALLEY GUTTER SHALL NOT BE STEEPER THAN 8.33% (12:1) WHERE SIDEWALKS ARE LOCATED.
7. MAXIMUM DRIVEWAY GRADES SHOWN BELOW ARE INTENDED FOR RESIDENTIAL DRIVEWAYS WHERE FLATTER GRADES ARE NOT FEASIBLE. GRADES FOR COMMERCIAL DRIVEWAYS OR FOR TRUCKS SHALL NOT BE GREATER THAN 10% UNLESS SPECIFIED OTHERWISE.

Guidelines For Usage On Metric Projects

When these details are incorporated into plans and or projects that are being prepared or constructed in metric units, exact or precise conversion to metric units is not required. The dimensions shown that are in feet and inches may be converted to corresponding metric units using the following "Rounded-Off" conversion factors: 1" =25mm, 4"=100mm, and 12" or 1' =300mm. All measurement notes that refer to linear feet and square yards shall be interpreted to mean linear meters and square meters.

(1) IS THE BACK OF SIDEWALK SURFACE GRADE OR THE SHOULDER SURFACE GRADE 10'-0" BACK OF THE CURB. SLOPE OF THE CONCRETE VALLEY GUTTER WILL BE SUCH THAT THE BACK OF THE DRIVEWAY TAPER WILL BE THE SAME ELEVATION.

(2) IS BEGINNING OF DRIVEWAY TIE-IN.

NOTE: (1) AND (2) MAY COINCIDE

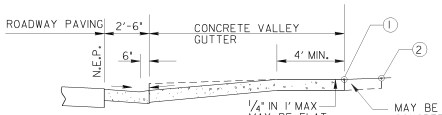

SECTION B-B

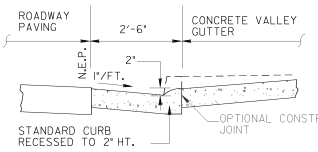

SECTION THRU GUTTER

NOTE:
ALTERNATES TO THE CURB ISLAND DESIGN SHOWN HERE MAY BE SPECIFIED IN THE PLANS.

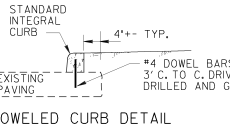

DOWELED CURB DETAIL

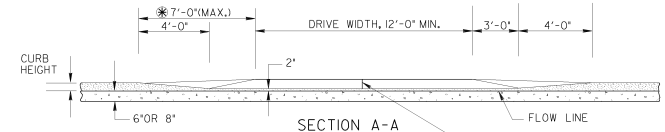

SECTION A-A

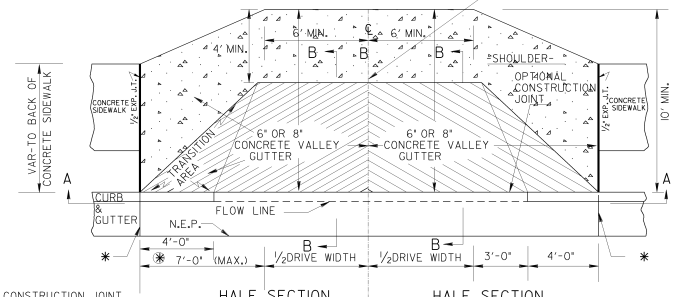

* CONSTRUCTION JOINT NOT REQUIRED IF THE OPTIONAL CONSTRUCTION JOINT IS PROVIDED BACK OF THE CURB.

HALF SECTION — SYMMETRICAL ABOUT THIS SIDE OF CENTERLINE WHERE CONCRETE SIDEWALK OCCURS.

HALF SECTION

PLAN

PLAN

RESIDENTIAL, COMMERCIAL OR NON-COMMERCIAL DRIVE

* 7'-0" OR DISTANCE EQUAL TO THAT FROM BACK OF CURB TO BACK OF SIDEWALK, WHICHEVER IS LESSER

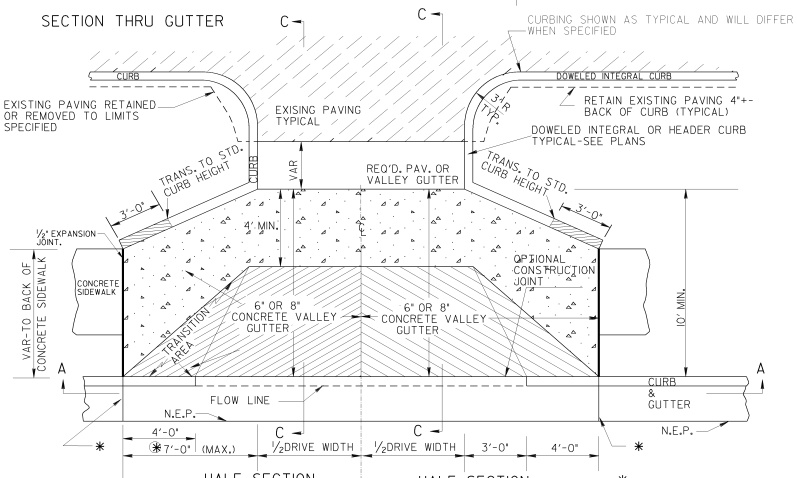

HALF SECTION — SYMMETRICAL ABOUT THIS SIDE OF CENTERLINE WHERE CONCRETE SIDEWALK OCCURS.

HALF SECTION

PLAN

PLAN

(SHOWN ADJACENT TO EXISTING PAVED PARKING AREA)

DRIVEWAY WITH CURB ISLAND

* CONSTRUCTION JOINT NOT REQUIRED IF THE OPTIONAL CONSTRUCTION JOINT IS PROVIDED BACK OF CURB.

V.C.	MAXIMUM GI	
	CUT	FILL
5'	27%	16.67%
10'	28%	27%

V.C.	GI-G2 (MAX. ALGEBRAIC GRADE CHANGE)	
	SAG	CREST
5'	21%	25%
10'	25%	36%

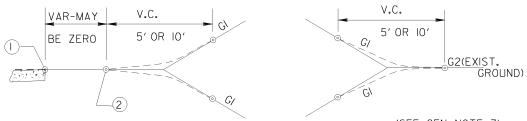

MAXIMUM DRIVEWAY GRADES (SEE GEN. NOTE 7)

This Detail Replaces Ga Standard 6050

DATE	REVISION	BY
4-8-02	REVISED	
4-3-02	REVISED	

DEPARTMENT OF TRANSPORTATION
STATE OF GEORGIA

SPECIAL DETAIL

DRIVEWAYS WITH TAPERED ENTRANCES
CONCRETE VALLEY GUTTERS

NO SCALE

MARCH 12, 2002

A1

APPENDIX F

POTABLE WATER STANDARD: FORMS

Release for water main construction

Date: _____-_____-_____

Project Name: _____

WR#: _____

Land lot: _____ **District:** _____

Developer: _____

Contractor: _____

_____ **1) Copy of contractor's insurance**
_____ **2) Compaction test – Date:** _____
_____ **3) Engineers certificate – Date:** _____
_____ **4) Invoice / Packing slip**
_____ **5) Copy of Labor agreement**
_____ **6) D.O.T / R&D permit if required**
_____ **7) Inspector's certification of materials**

Date: ____-____-____ **Inspector:** _____

When the above items are approved and or on file. Waterline construction is therefore authorized to begin

_____
Chief, construction Mgr

DeKalb County

Public Works Department

DEPARTMENT OF WATERSHED MANAGEMENT

1580 Roadhaven Drive, Stone Mountain, GA 30083
(770) 621-7200 • FAX (770) 724-1446 • TDD (770) 621-7237

Device Serial № _____
Test Date/Time _____
Tester Certification _____
Device Test Result ☐ Pass ☐ Fail

Backflow Prevention Device Test & Maintenance Report

(Please Print)

Account

Contact Name: _____ Phone# _____
Business Name: _____ Meter# _____ Meter Reading: _____
Mailing Address: _____
Service Address: _____ City: _____ ST: _____ Zip: _____

Device

Make: _____ Model: _____ Size: _____
Type: ☐ RPZ ☐ DC ☐ DCDA ☐ Detector Check
Date Installed: _____ Location on property: _____
☐ New
☐ Existing
Previous Device Serial №: _____

Orientation
☐ Vertical Up
☐ Vertical Down
☐ Horizontal

Use
☐ Domestic
☐ Fire
☐ Irrigation

Protection
☐ Containment
☐ Isolation

Testing & Maintenance

	Initial Test Results		Repairs/Comments	Re-Test Results	
	Tightness	Differential		Tightness	Differential
Check Valve #1 (RPZ, DC, PVB)	☐ Leak ☐ Tight			☐ Leak ☐ Tight	
Check Valve #2 (RPZ, DC)	☐ Leak ☐ Tight			☐ Leak ☐ Tight	
Relief Valve (RPZ)					
Buffer (RPZ)					
Line Pressure					
Shutoff Valve #1	☐ Leak	☐ Tight			
Shutoff Valve #2	☐ Leak	☐ Tight			

Comments: _____

Test Procedure: _____

Notification

Alarm Company/Fire Department Notified: _____
Person Notified: _____ Notified By: _____
Turn Off Date/Time: _____ Turn On Date/Time: _____

Test Kit

Test Kit Make: _____ Model: _____
Serial №: _____ Last Calibration Date: _____

Tester

Tester Name: _____ Certificate Expiration Date: _____
Tester certifies that this assembly has been tested with the above listed procedure and verifies that isolation valves were returned to pre-test orientation.

Signature: _____ Telephone No. _____

(Submit original white copy to water purveyor)

APPLICATION FOR WATER/SEWER SERVICE

DEKALB COUNTY FINANCE – TREASURY AND ACCOUNTING SERVICES
1300 COMMERCE DRIVE, ANNEX
DECATUR, GA 30030

_____ _____
(PLEASE PRINT) **LAST NAME FIRST NAME MI** **NEW ACCOUNT NUMBER**

_____ _____ _____
SERVICE ADDRESS **BILLING ADDRESS (IF DIFFERENT)** **CLOSING DATE/BEGINNING LEASE DATE**

_____ _____ _____ **OWNER** _____**MNGMNT CO**
CITY, STATE, ZIP CODE **CITY, STATE, ZIP CODE** _____**RENTER**

In consideration for receiving water and/or sewer service from DeKalb County, Georgia, at the above location, I hereby acknowledge responsibility for payment of service billings. A non-refundable application fee of twenty dollars ($20) will be added to the first bill, and account is subject to interruption without notice if not paid by due date.
A copy of the settlement statement (owner) or a copy of the lease agreement (tenant) and a picture identification is required to establish a Dekalb County Water/Sewer account.

DeKalb County may disconnect service if payment in full is not received by the due date indicated on the bill. The total outstanding balance must be paid for service to be restored. If service is interrupted due to non-payment, a twenty-dollar ($20.00) "turn off" fee will be billed to the account as well as a twenty dollar ($20.00) "turn on" fee when service is restored.

A twenty-five dollar ($25.00) fee will be charged for each dishonored check. If two dishonored checks are received within a twelve-month period, only cash, money order or certified check will be accepted for payment of services for the following twelve months.

Residential water accounts are billed on a bi-monthly basis (every two months), and payment by the indicated due date is required to prevent interruption of service. You may pay your water bills online at: www.co.dekalb.ga.us .

If you have a question regarding your bill, or need to discuss payment of your account, please call our Customer Service phone number, **(404) 378-4475** between the hours of 8:30 a.m. and 5:00 p.m., Monday through Friday with the exception of legal holidays. Our fax number **is (404) 687-3504**.

In consideration for having water service initiated/restored at the above address, I agree to ensure that all water service facilities (sinks, tubs, faucets/inside and outside, etc.) are turned off, or that someone will be on the property to check for leakage. I understand that DeKalb County is not responsible for water damage to this property or its contents. **If you are establishing new service and the water is off, it may take up to 5 business days from processing of the completed application (along with the submitted required documentation) to have service restored.**

_____ _____ _____
SIGNATURE **DATE** **DRIVERS LICENSE** **PREVIOUS ADDRESS**

_____/_____ _____ **LEAVE ON AT PREVIOUS LOCATION**
HOME TELEPHONE **WORK TELEPHONE** **SOCIAL SECURITY /TAX ID #** **YES_____ NO, PLEASE DISCONNECT ON _____**

*****APPLICATION WILL NOT BE PROCESSED WITHOUT ATTACHED PAPERWORK*****

APPENDIX G

GENERAL:
FORMS

ENGINEER'S CERTIFICATE
CONSTRUCTION COMPLETION FORM

DEKALB COUNTY DEPARTMENT OF WATERSHED MANAGEMENT –

DATE:_____

PROJECT:_____

LAND LOT: _____ DISTRICT:_____

This is to certify that _____

have (has) been graded to within 6 inches of the final grade, to conform to profile grade approved by DeKalb County Departmenr of Planning and Development;

That street(s) is (are) graded to proper width to allow for an eight (8) foot shoulder on each side of the curb. The shoulder is within six (6) inches of final grade;

That the proper catch-basins have been erected, and the proper drainage facilities installed;

That sewers and sewer services have been installed;

That proof of 95% compaction has been provided as required;

That if easements are involved, they are within six (6) inches of final grade;

That no water mains will be laid until center line stakes have been installed and materials inspected and approved by Chief, Construction Management.

COMMENTS:_____
_____

Signed:_____
Developer's Project Engineer

Date Approved:_____

_____ _____
Road or Subdivision Engineer Chief, Construction Management
Development Division

NOTE: Submit completed Engineer's Certificate to the Development Division.

PRESSURE TEST FORM

Project Name: _____

Constructed by: _____

☐ Force Main
☐ Reclaimed Main
☐ Water Main

Allowable Loss – 2 Hours

$L = \frac{SD(P)^{1/2}}{148{,}000}$ See Note Below

DATE	LINE SEGMENT	STATION		LENGTH	N	D	START		END		LOSS (gal)		Pass /Fail STATUS
		From	To				Time	PSI	Time	PSI	Allow	Actual	

COUNTY Inspector's Name:		Signature:		Date:	
Tester's Name:		Signature:		Date:	
Comments:					

Note:

L - Allowable leakage in gallons per hour.
S - Length of pipe tested, in feet.
D - Nominal diameter of the pipe in inches.
P - Average test pressure during leakage test in pounds per square inch gauge.

APPENDIX H

GRAVITY SANITARY SEWER STANDARD: REFERENCE MATERIAL

Gravity Sanitary Sewer System Plan Checklist

The Engineer is referred to the DeKalb County Department of Watershed Management "Potable Water, Gravity Sanitary Sewer, and Sanitary Sewer Pumping Station and Force Main Design Standards" for general information on the preparation of water distribution systems.

This checklist is intended to be a guide in preparing Gravity Sanitary Sewer System Plans. This checklist is not all encompassing. It is left to the Engineer's discretion to decide what additional information may be needed to complete the plans. Approval of plans does not relieve the contractor of meeting the DeKalb County Department of Watershed Management "Potable Water, Gravity Sanitary Sewer, and Sanitary Sewer Pumping Station and Force Main Design Standards".

ALL SHEETS

- ☐ Final plans shall be on 24"x36" paper sheets.
- ☐ Each sheet except the cover sheet shall have a title block in the lower right corner containing:
  - ☐ Project name,
  - ☐ Project number (if DeKalb County project),
  - ☐ Sheet number,
  - ☐ Total number of sheets,
  - ☐ Scale,
  - ☐ Drawer's, Designer's and Checker's initials and date,
  - ☐ Date (month/day/year)
- ☐ All sheets shall be sealed, signed and dated by a Civil Engineer licensed in State of Georgia.

COVER SHEET

The Engineer shall provide a cover sheet with the following information:

- ☐ Project name,
- ☐ Drawing Index which provides sheet number and description of corresponding sheet.
- ☐ Vicinity Map
- ☐ District and Land Lot number
- ☐ Engineering firm's name, address and telephone number
- ☐ Developer's name, address and telephone number
- ☐ Date (month/day/year)
- ☐ Signature Approval Blocks

SHEET 2

The Engineer shall provide a general sheet containing the following information:

- ☐ General notes covering important parameters as outlined in the DeKalb County Department of Watershed Management "Potable Water, Gravity Sanitary Sewer, and Sanitary Sewer Pumping Station and Force Main Design Standards".
- ☐ Other notes as necessary to cover situations **not** covered by the Design Standards or by the DCDWM Standard Details.
- ☐ Legend showing symbols and line types used within the drawings
- ☐ Engineering firm's title block containing firm's name, address, and phone number.
- ☐ Elevation datum and benchmark information in State Plane Coordinates.
- ☐ Note to be shown on sheet: **Contractor shall notify DeKalb County Department of Watershed Management Inspector at 770-621-7212 48 hours prior to start of construction.**

GRAVITY SANITARY SEWER PLAN & PROFILE SHEETS

- ☐ Plan view shall show to proper scale. Scale shall not be more than:

  Plan: 1 inch = 50 feet

  Profile: Horizontal – 1 inch = 50 feet

  Vertical – 1 inch = 10 feet
- ☐ Plan view shall show the following:
  - ☐ All streets, alleys and easements. They shall be dimensioned at least once and at breaks. Streets shall be identified by name.
  - ☐ All abutting lots shall be identified by lot number, tract and subdivision.
  - ☐ All topography within and to at least five (5) feet beyond easements and topography affected by construction shall be shown.
  - ☐ Location of all above and underground utilities, including storm and sanitary sewers, water lines, dry wells, buried telephone lines, natural gas, power, and cables. Existing utilities shall be shown as dashed lines or faded lines with type, size, and other available information called out.
  - ☐ All structures, paving and other topographic features within vicinity, such as trees, shall be shown and identified by name, size and type.

- ☐ Location of proposed sanitary sewer lines, manholes, and sewer services. Items shall be identified by name or number, size, and type, stations, and deflection angles at manholes.
- ☐ Location of all existing and proposed easements.
- ☐ Location of all existing benchmarks shall be shown and identified by type.
- ☐ Location of all connections to existing sewer lines.
- ☐ Show horizontal clearance from buildings, structures, drainage culvert, and water mains.
- ☐ Show location of SS lines from the curb under the pavement.
- ☐ Show distance between SS manhole and the curb line.
- ☐ Sewer service connection and cleanout shall be either stationed or dimensioned from property line. Also, provide offset dimension from the stationed centerline.
- ☐ Location of soil boring holes.
- ☐ All sheets shall have a north arrow orienting the plan view.

☐ Profile view shall show the following:

- ☐ Existing utilities which cross the proposed utility. Identify crossing utility by name, pipe size, pipe material, type of utility (use), location (station) and elevation. Location and elevation are to be obtained from "as-built" plans paying particular attention to any differences in datum.

NOTE*: **All existing underground utilities shown on profile are assumed to be shown in approximate location only.***

- ☐ Show existing ground and proposed ground.
- ☐ Show manhole number, station, rim, and invert elevations.
- ☐ Maintain 0.2 feet elevation drop through manhole inverts.

☐ All sheets shall show match lines labeled as such with station and sheet number.

☐ Proposed sewer lines shall be shown as solid lines with sizes, slope, material, and pipe classes called out. For example: 8 inch DIP (SS) – Class 350.

☐ Show any lift stations adjoining the gravity sanitary sewer system.

☐ Show gravity sanitary sewer schedule. For example:

MH #	Rim Elev. (ft)	Invert In Elev. (ft)	Invert Out Elev. (ft)	Pipe Segment (From /To)	Pipe Length (ft)	Pipe Material and Class	Slope %
SS1	1024.62	1019.20	1019.20	SS1/SS2	250	8" DIP-Class 350	1.2
SS2	1023.9	1018.9	1018.9	SS2/SS3	262	8" PVC-SDR35	1.8

DETAIL SHEETS

- ☐ Include DeKalb County Department of Watershed Management “Potable Water, Gravity Sanitary Sewer, and Sanitary Sewer Pumping Station and Force Main Design Standards” Standard Details to be used on the project.
- ☐ Include any other details specific to the project that are not covered by DeKalb County Department of Watershed Management “Potable Water, Gravity Sanitary Sewer, and Sanitary Sewer Pumping Station and Force Main Design Standards” Standard Details.
- ☐ Detail sheets shall be located at the end of the plan set and referenced where used.

APPENDIX I

GRAVITY SANITARY SEWER:
STANDARD DETAILS

H:\Atlanta Workshare\Dekalb County - W_WW Stds\4.0 Project Engineering\4.1 CAD Design\Dekalb STD-Details\13.00_CAD\Sewer_Standard_Details\001 Standard Precast Manhole.dwg, Layout1, 2/15/2008 3:31:55 PM, dking, Test

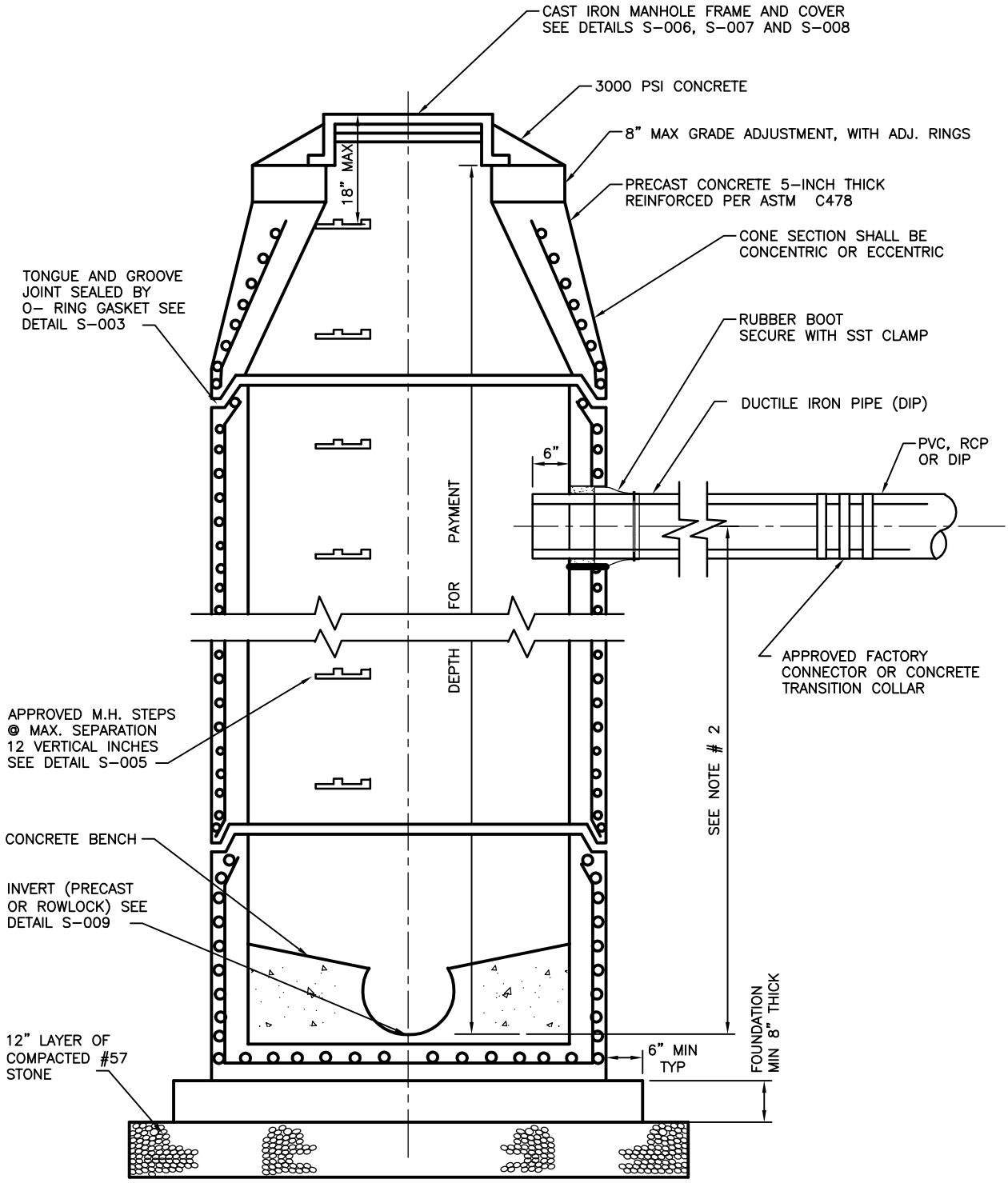

NOTES:

1. WHERE NECESSARY TO CONSTRUCT MANHOLE OVER EXISTING SEWER, 9" THICK CONCRETE POURED-IN-PLACE FOOTING/FOUNDATION MAY BE USED IN LIEU OF PRECAST BOTTOM SECTION.

2. WHERE DROP FROM INVERT OF MANHOLE TO INVERT OF INFLUENT PIPE(S) EXCEED 2'-0", AN OUTSIDE DROP CONNECTION SHALL BE REQUIRED EXCEPT WHEN DCDWM SPECIFICALLY APPROVES ITS ELIMINATION. SEE DETAIL S-002.

3. PRECAST ALL OPENINGS FOR PIPE IN BASE AND RISER UNITS.

DEKALB COUNTY, GA. Department of Watershed Management	**STANDARD DETAILS**	12/07
	Standard Precast Manhole	
	NOT TO SCALE	DETAIL NO. S-001

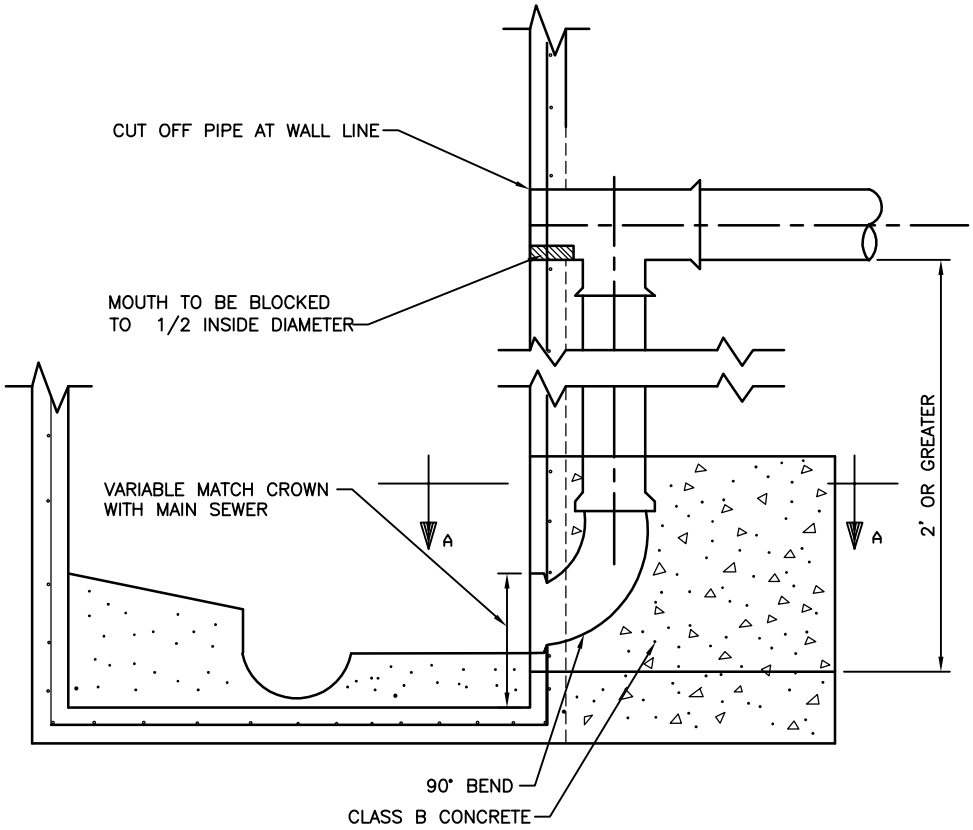

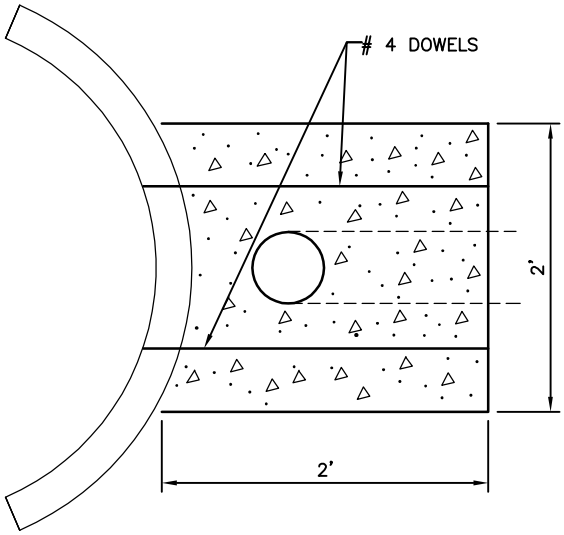

NOTES:

1. "DROP CONNECTION" SHALL INCLUDE THE EXCAVATION, MH CORE, CONCRETE, DIP, FITTINGS AND OTHER INCIDENTALS NECESSARY TO COMPLETE THE ITEM. DUCTILE IRON PIPE (18' MIN) INSTALLED UPSTREAM OF THE TEE.
2. ALL BENDS, TEES, AND FITTINGS REQUIRED TO INSTALL OUTSIDE DROP SHALL BE DUCTILE IRON.

DEKALB COUNTY, GA. Department of Watershed Management	**STANDARD DETAILS**	07/08
	Outside Drop Connection For Precast Manhole	
	NOT TO SCALE	DETAIL NO. S-002

H:\Atlanta Workshare\Dekalb County - W_WW Stds\4.0 Project Engineering\4.1 CAD Design\Dekalb STD-Details\13.00_CAD\Sewer_Standard_Details\003 Manhole Joint Detail.dwg, Layout1, 1/8/2008 5:03:34 PM, hmangani, Test

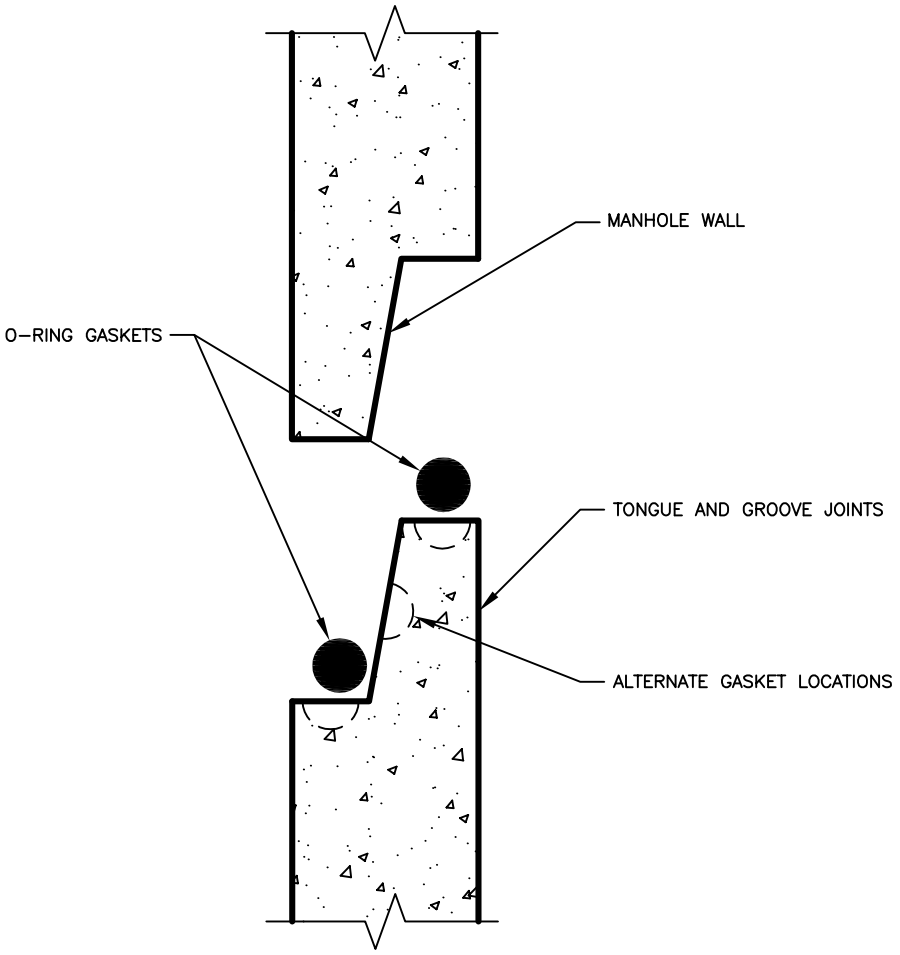

NOTE:

AFTER INSTALLATION JOINTS SHALL BE GROUTED SMOOTH WITH CEMENT GROUT ON INSIDE AND OUT.

DEKALB COUNTY, GA. Department of Watershed Management	STANDARD DETAILS	12/07
	Manhole Joint Detail	
	NOT TO SCALE	DETAIL NO. S-003

H:\Atlanta Workshare\Dekalb County - W_WW Stds\4.0 Project Engineering\4.1 CAD Design\Dekalb STD-Details\13.00_CAD\Sewer_Standard_Details\004 Method of Abandonment.dwg, Layout1, 1/8/2008 5:03:52 PM, hmangani, Test

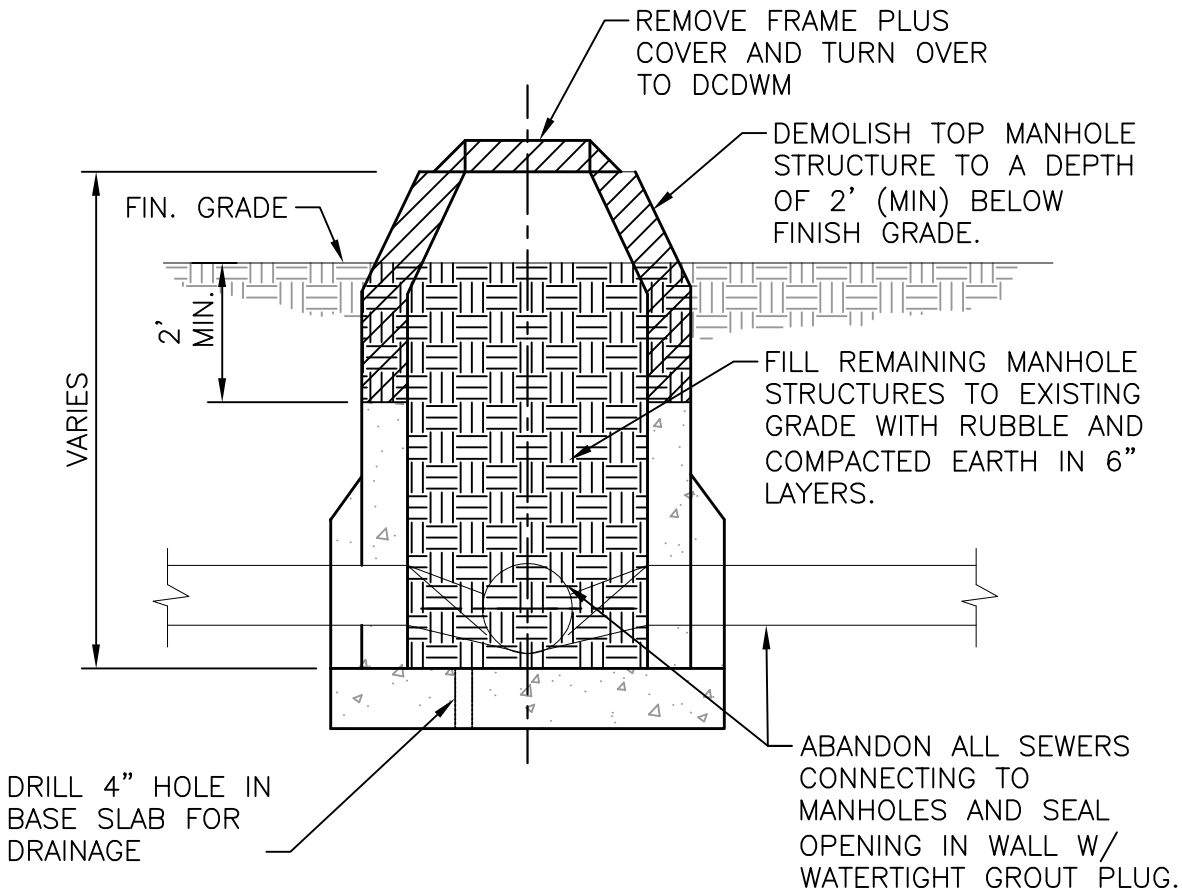

DEKALB COUNTY, GA. Department of Watershed Management	STANDARD DETAILS	12/07
	Method of Manhole Abandonment	
	NOT TO SCALE	DETAIL NO. S-004

H:\Atlanta Workshare\Dekalb County - W_WW Stds\4.0 Project Engineering\4.1 CAD Design\Dekalb STD-Details\13.00_CAD\Sewer_Standard_Details\005 Typical Manhole Step.dwg, Layout1, 2/15/2008 3:34:06 PM, dking, Test

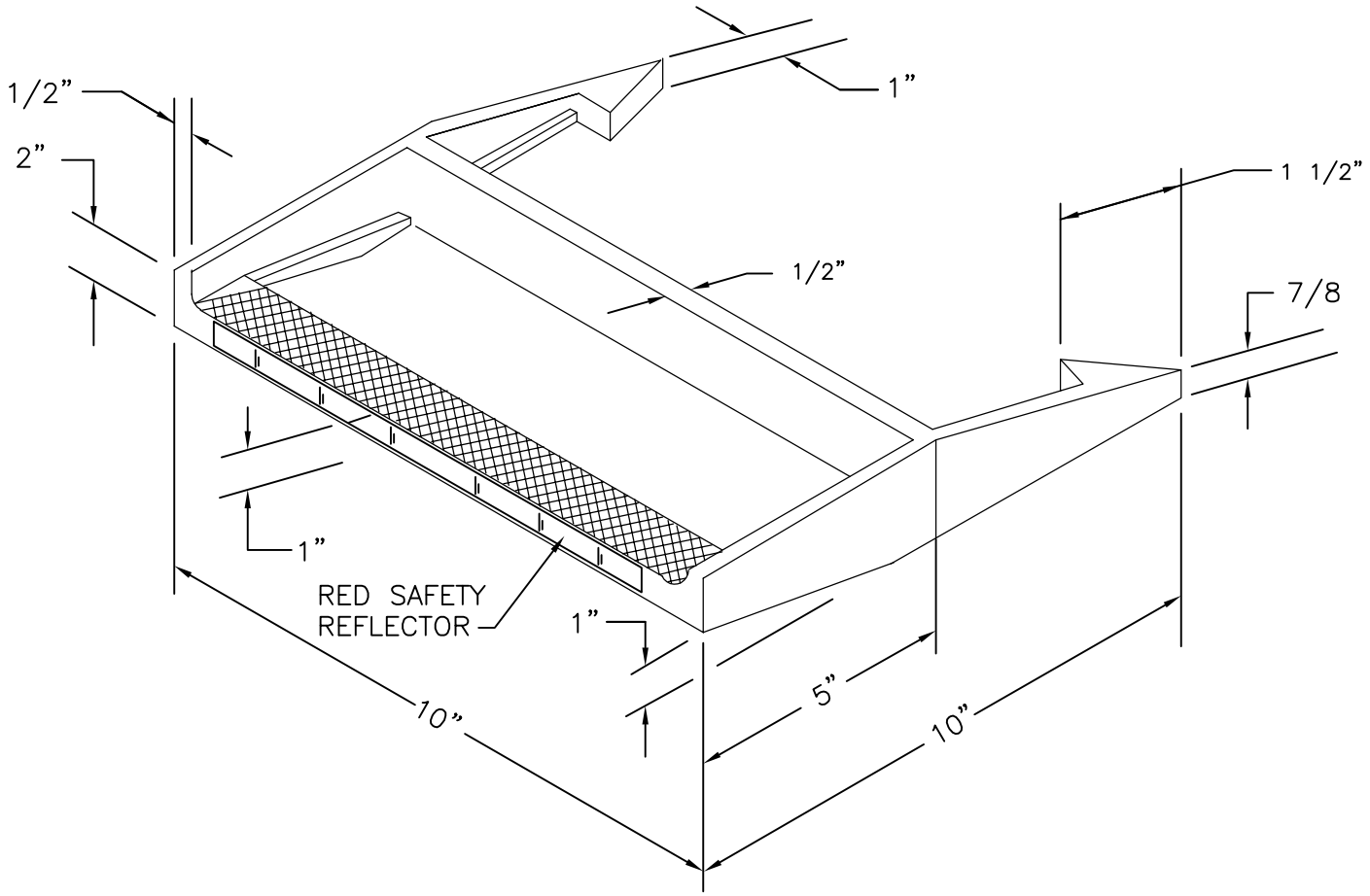

NOTES:

1. STEPS MAY BE CAST IRON, COATED STEEL, PLASTIC OR ALUMINUM AND MEET ASTM C–478 REQUIREMENTS.
2. MINIMUM DESIGN LIVE LOAD SHALL BE A SINGLE CONCENTRATED LOAD OF 300LBS.
3. STEPS SHALL BE A MINIMUM OF 10" WIDE. EMBEDDED A MINIMUM OF 3" AND PROJECT MINIMUM CLEAR DISTANCE OF 4".
4. MAXIMUM VERTICAL SPACING SHALL BE 12" IN THE COMPLETED MANHOLE.

DEKALB COUNTY, GA. Department of Watershed Management	**STANDARD DETAILS**	12/07
	Typical Manhole Step	Water Matters
	NOT TO SCALE	DETAIL NO. S-005

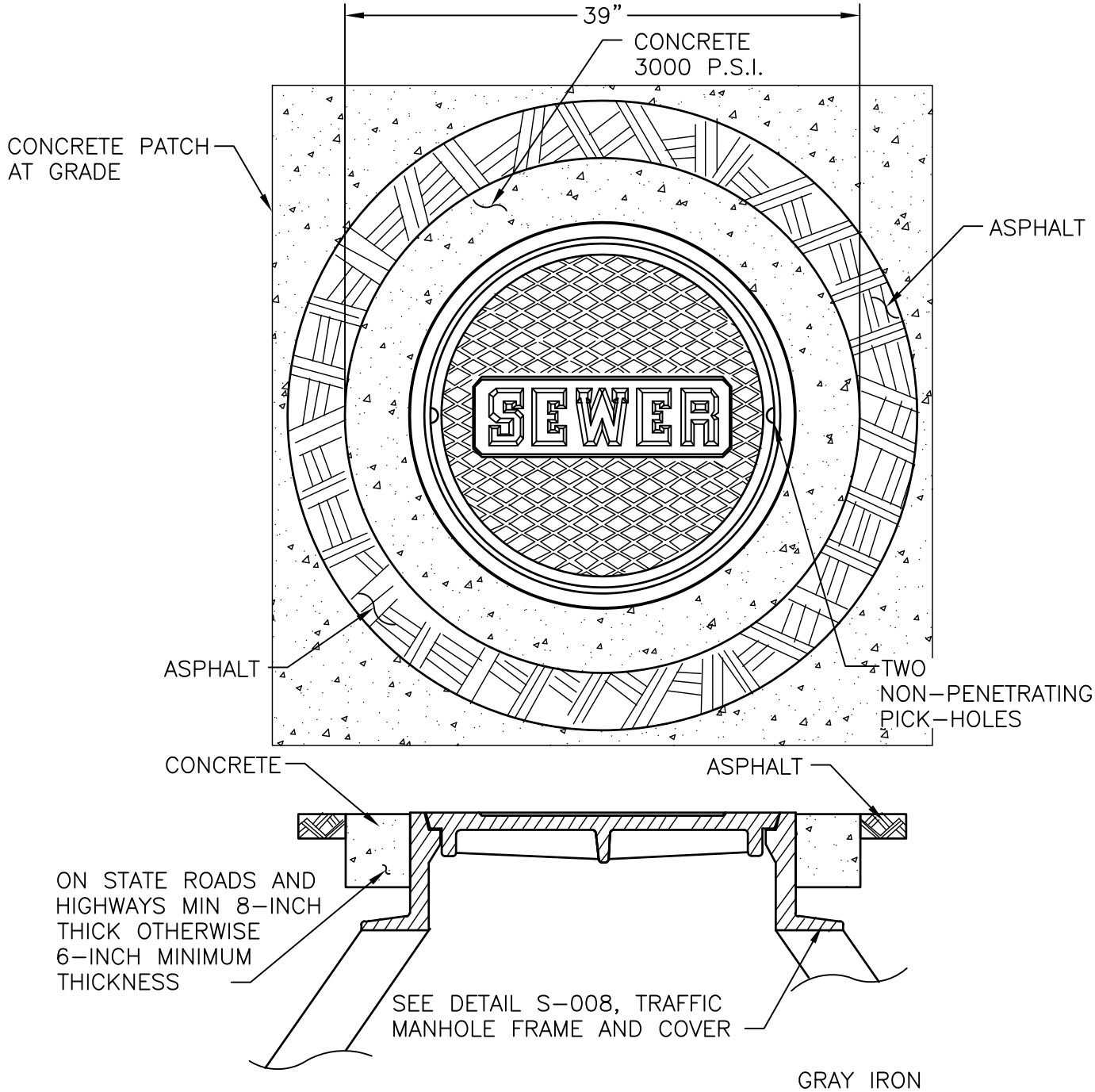

GRAY IRON
ASTM A48 CL30
FRAME WT.= 282 LBS
LID WT. = 178 LBS

TOTAL WT. = 460 LBS

NOTE:

CONCRETE COLLARS ONLY REQUIRED IN STREETS, ROADWAYS AND OTHER AREAS SUBJECT TO VEHICULAR TRAFFIC.

DEKALB COUNTY, GA. Department of Watershed Management	**STANDARD DETAILS**	07/08
	Concrete Collar for Manhole Frame and Cover	
	NOT TO SCALE	DETAIL NO. S-006

H:\Atlanta Workshare\Dekalb County - W_WW Stds\4.0 Project Engineering\4.1 CAD Design\Dekalb STD-Details\13.00_CAD\Sewer_Standard_Details\007 Bolt Down Manhole Frame and Cover.dwg, Layout1, 2/15/2008 3:35:38 PM, dking

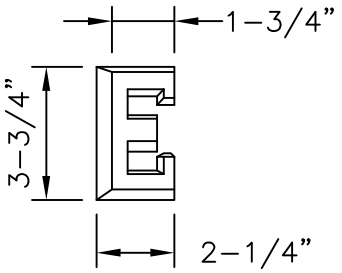

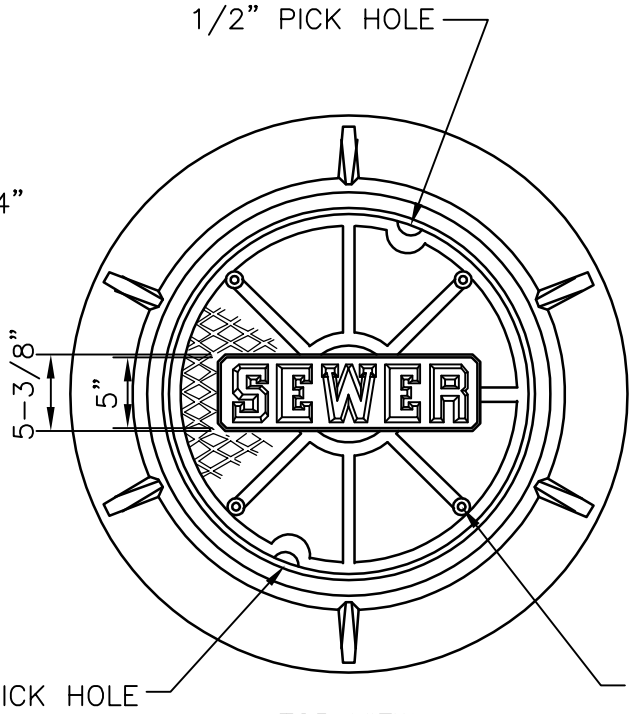

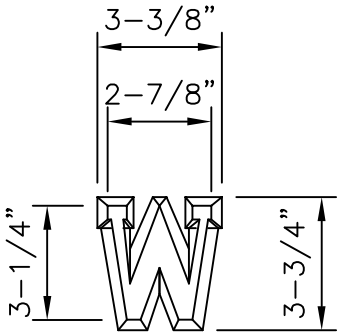

ISOMETRIC OF
1/4" HIGH LETTERS

GRAY IRON
ASTM A48 CL30
TOTAL WT. = 320 LBS.

4 -1/2" x 3" HEX
HEAD BRONZE BOLTS

TOP VIEW

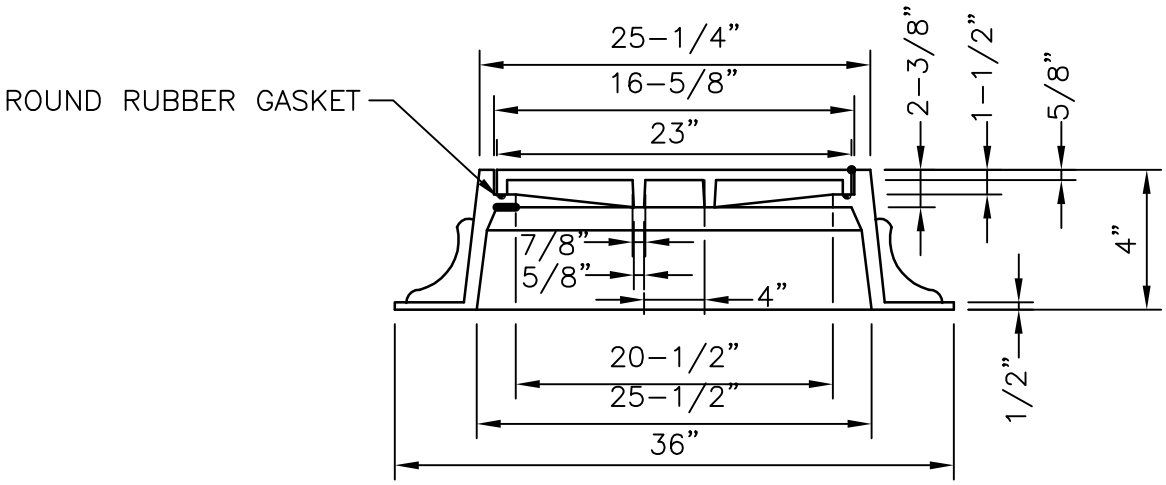

SIDE VIEW

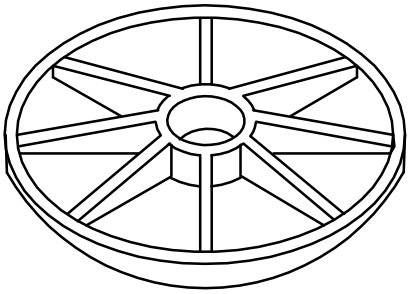

NOTE:

MANHOLES CONSTRUCTED IN NON-PAVED AREAS
SHALL BE INSTALLED WITH BOLT DOWN LID.

DEKALB COUNTY, GA. Department of Watershed Management	**STANDARD DETAILS**	12/07
	Bolt Down Manhole Frame and Cover	WATER Matters
	NOT TO SCALE	DETAIL NO. S-007

H:\Atlanta Workshare\Dekalb County - W_WW Stds\4.0 Project Engineering\4.1 CAD Design\Dekalb STD-Details\13.00_CAD\Sewer_Standard_Details\008 Traffic Manhole Frame and Cover.dwg, Layout1, 2/15/2008 3:39:17 PM, dking, Te

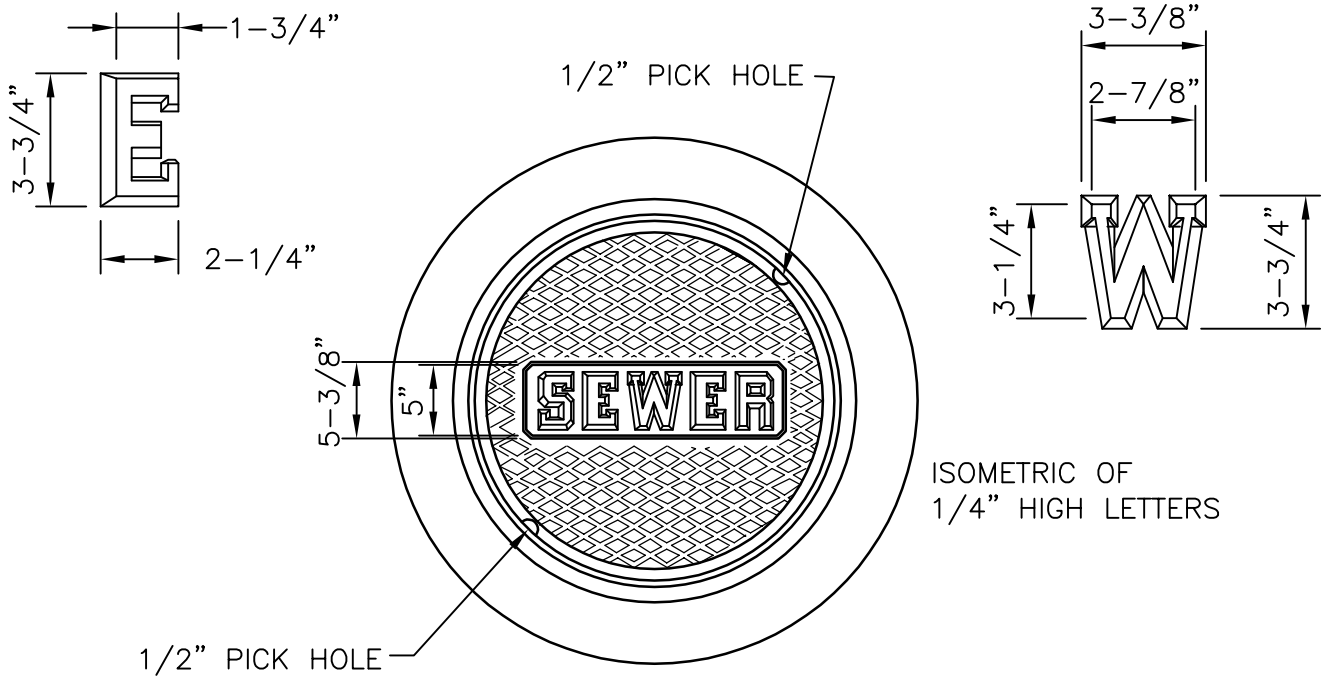

TOP VIEW

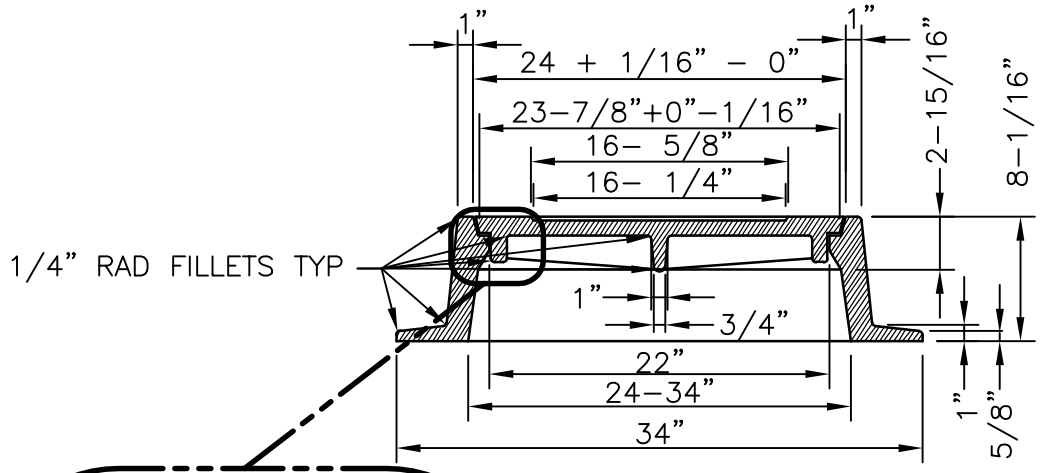

SIDE VIEW

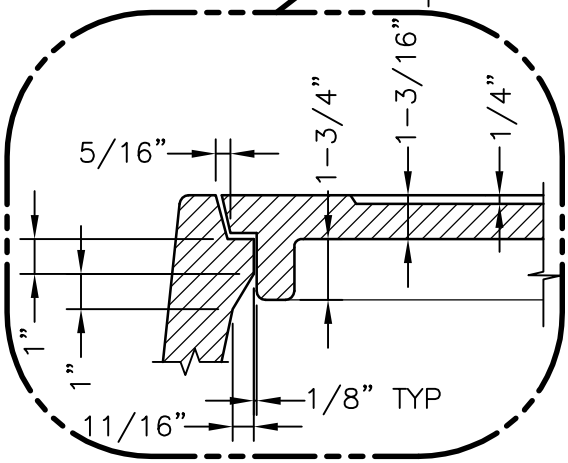

GRAY IRON
ASTM A48 CL30
FRAME WT.= 282 LBS
LID WT. = 178 LBS

TOTAL WT. = 460 LBS

DEKALB COUNTY, GA. Department of Watershed Management	**STANDARD DETAILS**	12/07
	Traffic Manhole Frame and Cover	WATER Matters
	NOT TO SCALE	DETAIL NO. S-008

H:\Atlanta Workshare\Dekalb County - W_WW Stds\4.0 Project Engineering\4.1 CAD Design\Dekalb STD-Details\13.00_CAD\Sewer_Standard_Details\009 Invert Plan.dwg, Layout1, 2/15/2008 3:39:54 PM, dking, Test

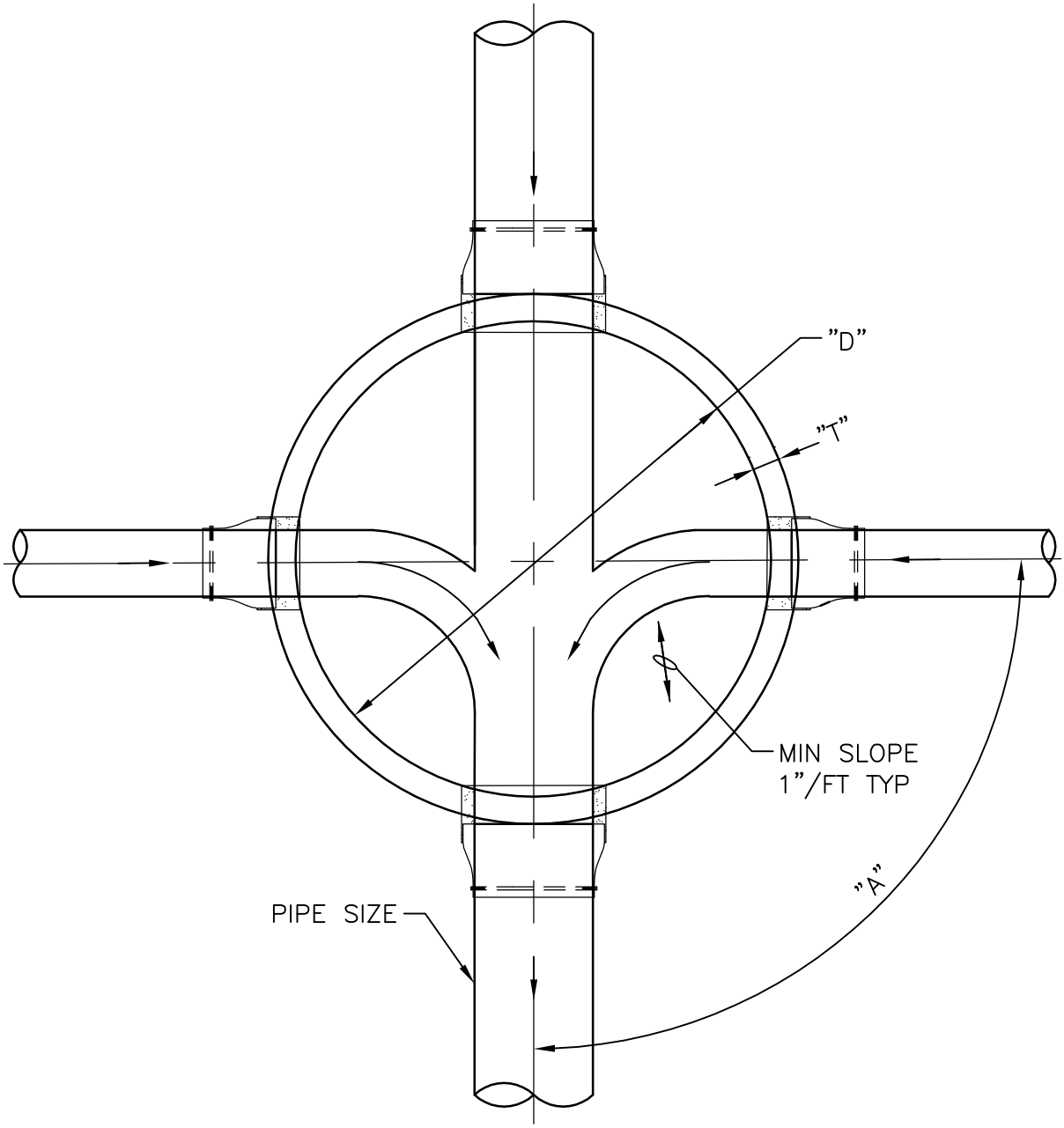

PIPE SIZE	"A"	"D"	"T"
6" & 15"	0° – 90°	4'–0"	5"
18"	0° – 60°	4'–0"	5"
18"	60° – 90°	5'–0"	6"
21" & 24"	0° – 60°	5'–0"	6"
21" & 24"	60° – 90°	6'–0"	7"

NOTE:

1. MINIMUM CENTERLINE RADIUS OF MANHOLE INVERT = 1.5 x PIPE DIAMETER

DEKALB COUNTY, GA.
Department of Watershed Management

STANDARD DETAILS

12/07

Invert Plan

NOT TO SCALE

DETAIL NO. S-009

H:\Atlanta Workshare\Dekalb County - W_WW Stds\4.0 Project Engineering\4.1 CAD Design\Dekalb STD-Details\13.00_CAD\Sewer_Standard_Details\010 New Line Connection to an Existing Structure.dwg, Layout1, 2/15/2008 3:40:44 PM

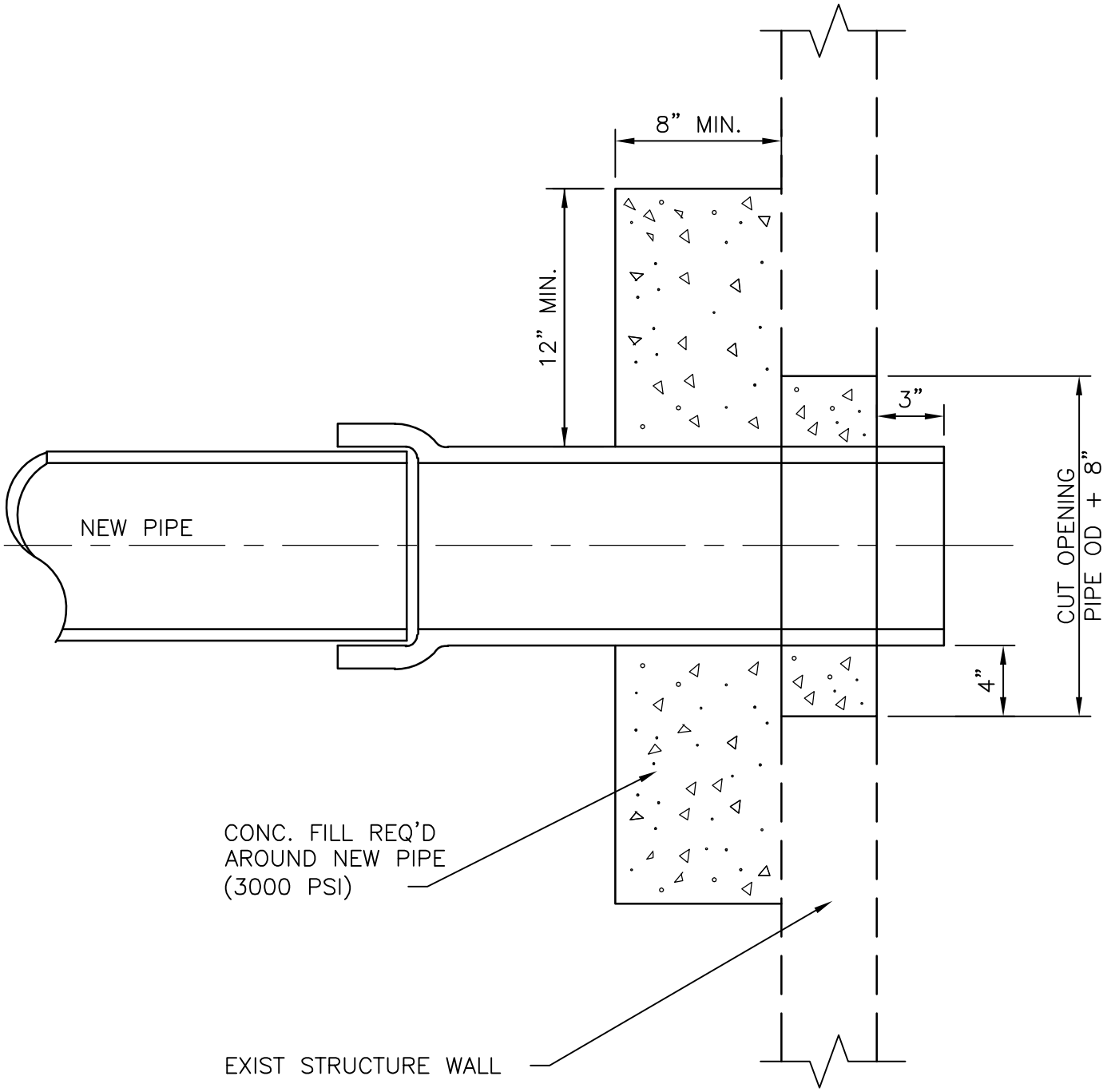

DEKALB COUNTY, GA.
Department of Watershed Management

STANDARD DETAILS

New Line Connection to an Existing Structure

NOT TO SCALE

12/07

DETAIL NO. S-010

H:\Atlanta Workshare\Dekalb County - W_WW Stds\4.0 Project Engineering\4.1 CAD Design\Dekalb STD-Details\13.00_CAD\Sewer_Standard_Details\011 Typical Service Line and Clean Out Detail.dwg, Layout1, 2/22/2008 2:18:21 PM, m

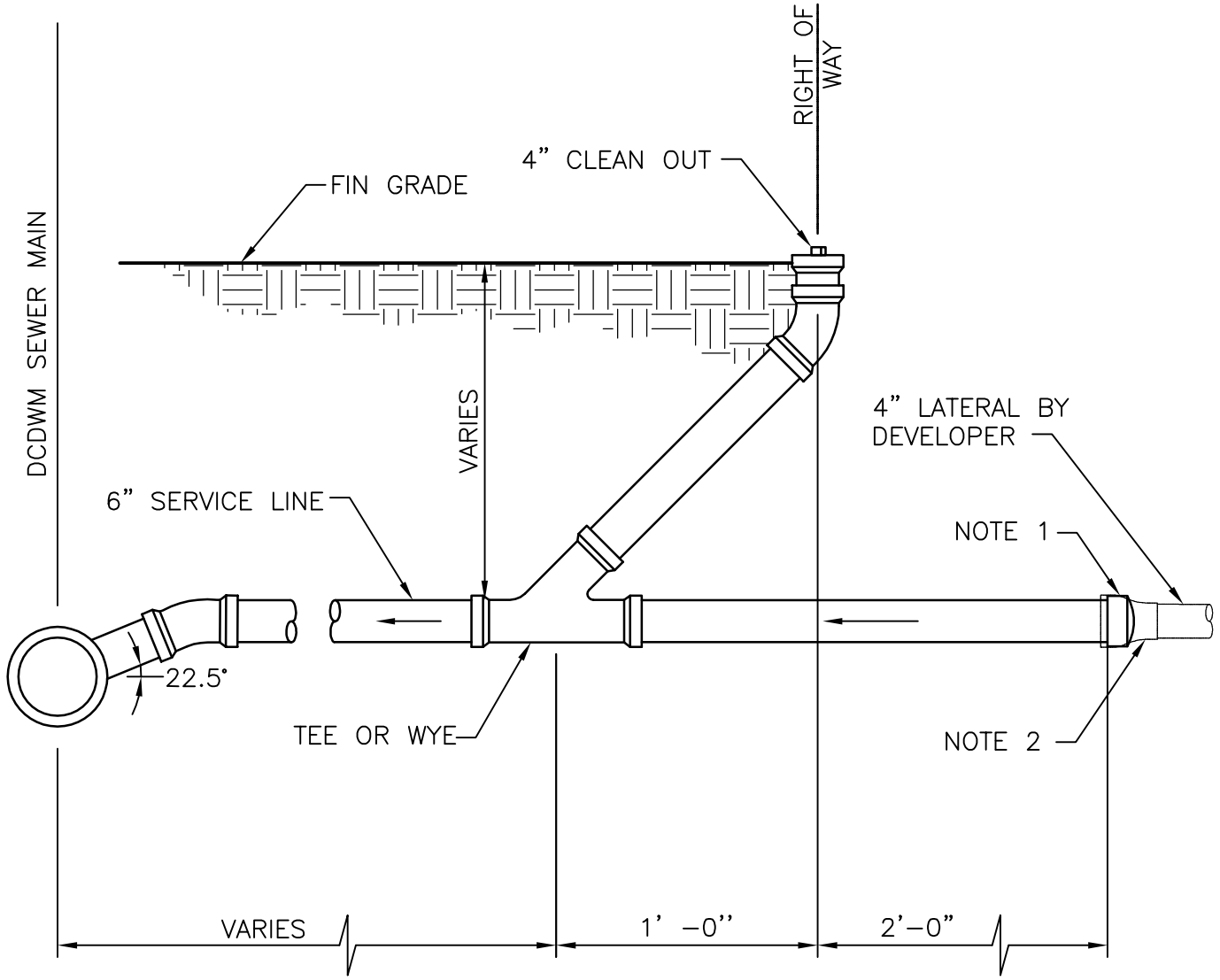

NOTES:

1. PLUG 6" SERVICE LINE IF SERVICE DOES NOT CONTINUE (HAND INSTALLED LOOSLY – NO SOLVENT)

2. CONNECT DEVELOPER'S 4" LATERAL TO 6" SERVICE LINE W/ 4" X 6" FERNCO COUPLING INCLUDING SST BANDS

DEKALB COUNTY, GA. Department of Watershed Management	**STANDARD DETAILS**	12/07
	Typical Service Line and Clean Out Detail	WATER Matters
	NOT TO SCALE	DETAIL NO. S-011

H:\Atlanta Workshare\Dekalb County - W_WW Stds\4.0 Project Engineering\4.1 CAD Design\Dekalb STD-Details\13.00_CAD\Sewer_Standard_Details\012 Class A Bedding.dwg, Layout1, 1/8/2008 5:06:06 PM, hmangani, Test

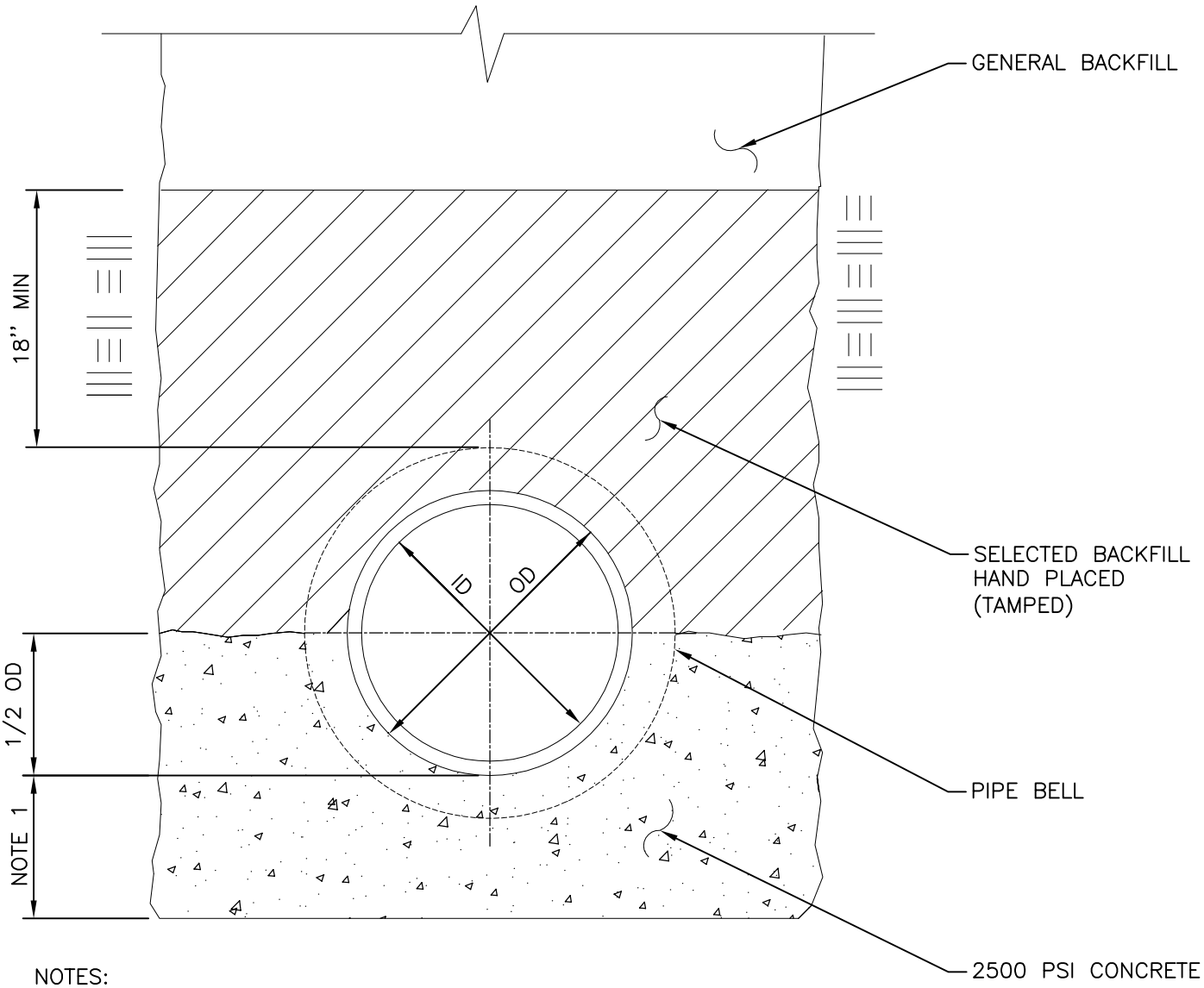

NOTES:

1. CONCRETE DEPTH BELOW PIPE:

   a.) PIPE DIAMETER UP TO 12":

      i.) EQUAL TO 1/2 TIMES THE OUTSIDE DIAMETER (OD)

      ii.) MINIMUM 6"

   b.) PIPE DIAMETER GREATER THAN 12":

      i.) EQUAL TO 1/4 TIMES THE OUSIDE DIAMETER (OD)

      ii.) MINIMUM 6"

   C.) MAXIMUM 12"

DEKALB COUNTY, GA. Department of Watershed Management	**STANDARD DETAILS**	12/07
	Class "A" Bedding	
	NOT TO SCALE	DETAIL NO. S-012

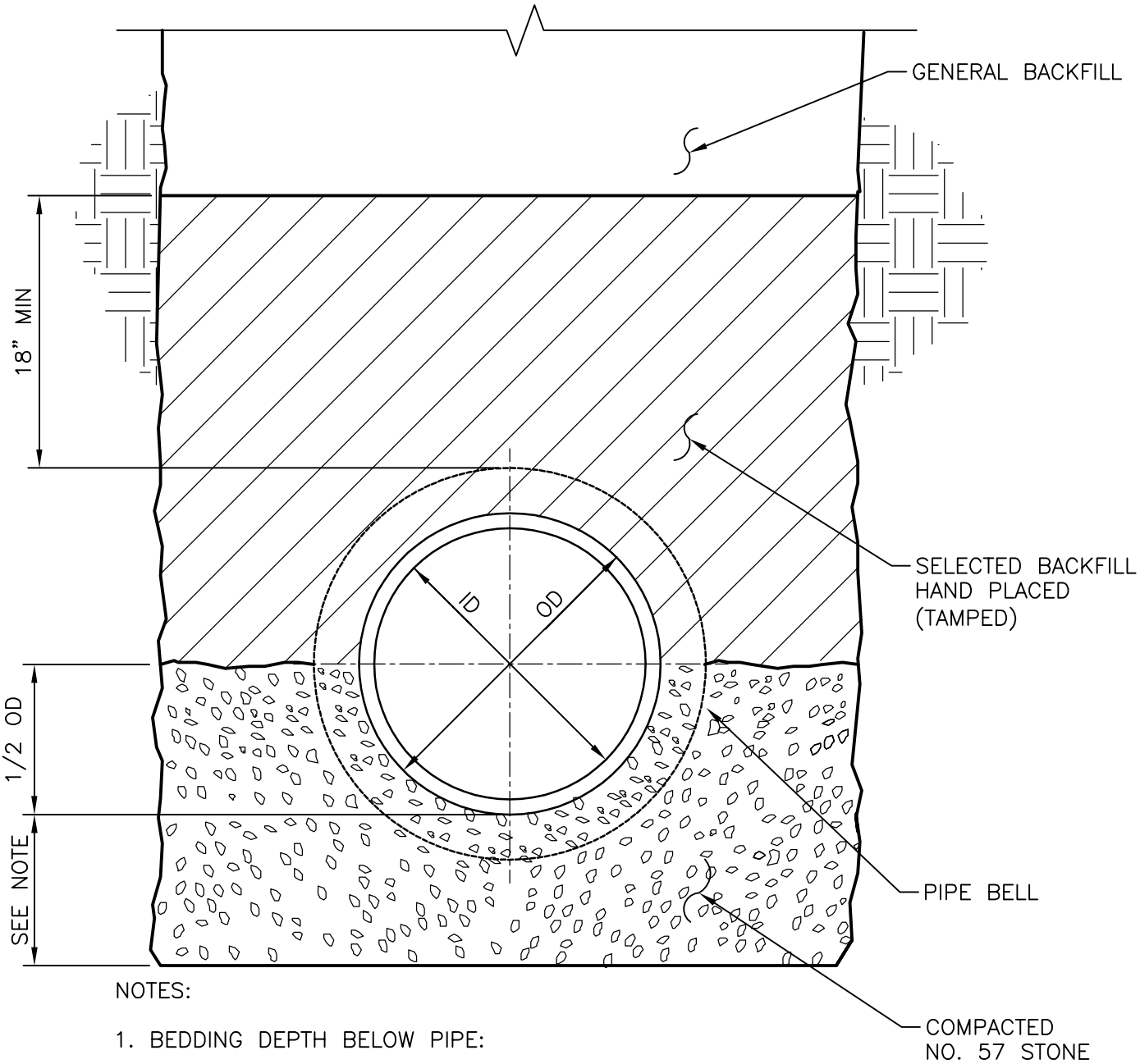

NOTES:

1. BEDDING DEPTH BELOW PIPE:

   a.) PIPE DIAMETER UP TO 12":

      i.) EQUAL TO 1/2 TIMES THE OUTSIDE DIAMETER (OD)

      ii.) MINIMUM 4"

   b.) PIPE DIAMETER GREATER THAN 12":

      i.) EQUAL TO 1/4 TIMES THE OUSIDE DIAMETER (OD)

      ii.) MINIMUM 6"

   C.) MAXIMUM 12"

DEKALB COUNTY, GA. Department of Watershed Management	**STANDARD DETAILS**	12/07
	Class "B" Bedding	WATER Matters
	NOT TO SCALE	DETAIL NO. S-013

H:\Atlanta Workshare\Dekalb County - W_WW Stds\4.0 Project Engineering\4.1 CAD Design\Dekalb STD-Details\13.00_CAD\Sewer_Standard_Details\013Class B Bedding.dwg, Layout1, 2/22/2008 2:34:16 PM, mhofreit, Test

H:\Atlanta Workshare\Dekalb County - W_WW Stds\4.0 Project Engineering\4.1 CAD Design\Dekalb STD-Details\13.00_CAD\Sewer_Standard_Details\014 Class C Bedding.dwg, Layout1, 2/22/2008 2:43:10 PM, mhofreit, Test

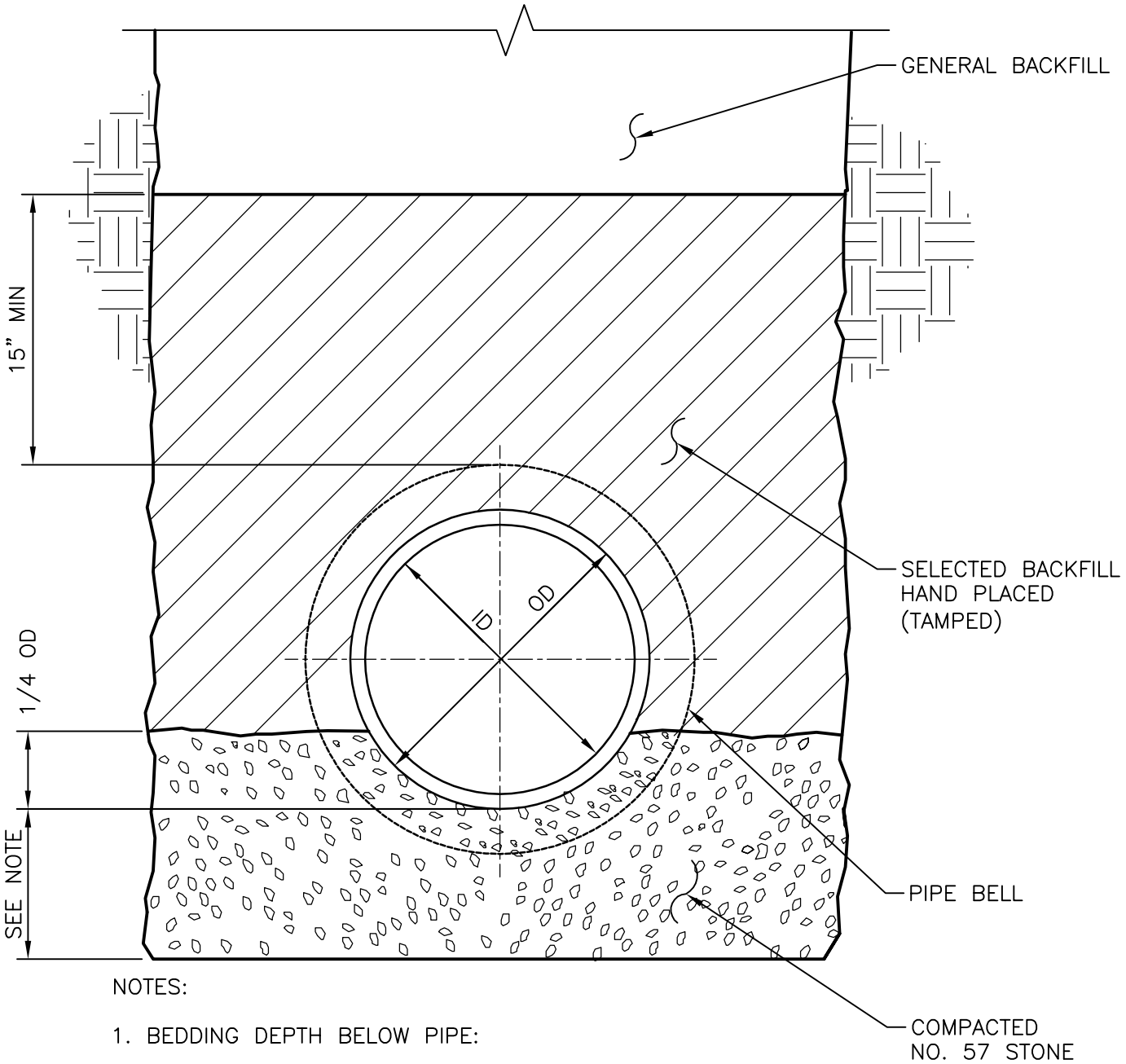

NOTES:

1. BEDDING DEPTH BELOW PIPE:

   a.) PIPE DIAMETER UP TO 12":

      i.) EQUAL TO 1/2 TIMES THE OUTSIDE DIAMETER (OD)

      ii.) MINIMUM 4"

   b.) PIPE DIAMETER GREATER THAN 12":

      i.) EQUAL TO 1/4 TIMES THE OUSIDE DIAMETER (OD)

      ii.) MINIMUM 6"

   C.) MAXIMUM 12"

DEKALB COUNTY, GA. Department of Watershed Management	**STANDARD DETAILS**	12/07
	Class "C" Bedding	WATER Matters
	NOT TO SCALE	DETAIL NO. S-014

H:\Atlanta Workshare\Dekalb County - W_WW Stds\4.0 Project Engineering\4.1 CAD Design\Dekalb STD-Details\13.00_CAD\Sewer_Standard_Details\015 Tunnel Detail.dwg, Layout1, 2/15/2008 3:43:12 PM, dking, Test

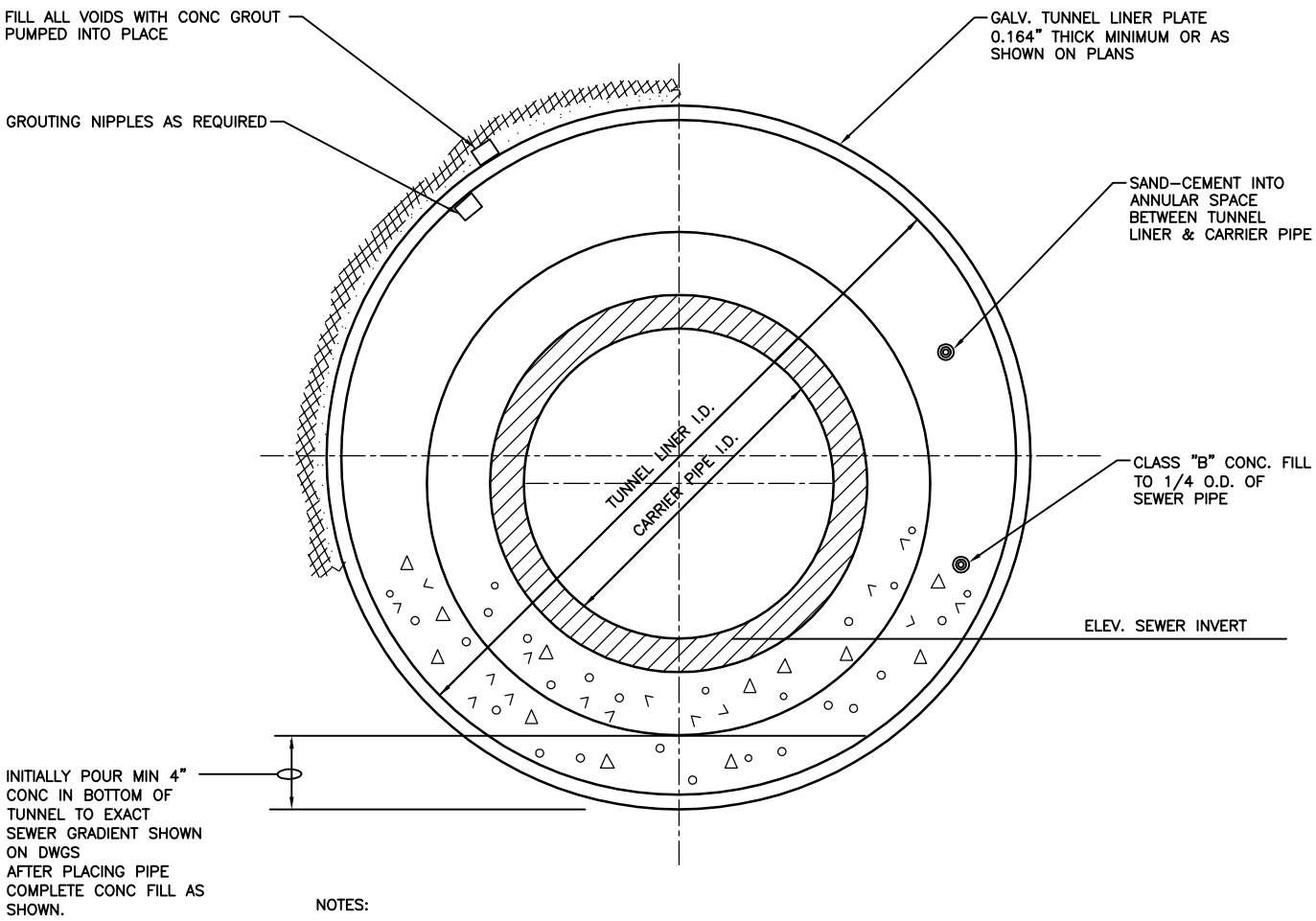

NOTES:

1. PROVIDE 12" THICK MASONARY WALL SEAL AT EA. END OF TUNNEL.
2. AT LOW END OF TUNNEL PROVIDE 6" SQ. WEEPHOLE IN BOTTOM OF WALL.
3. WEEPHOLE PROVIDE A 2' SQ. X 18" DEEP POCKET OF CRUSHED STONE.
4. SECURE SEWER PIPE IN POSITION APPROVED BLOCKING TECHNIQUE AT 10' INTERVALS.
5. UNIT PRICE FOR TUNNEL PER L.F SHALL BE FULL COMPENSATION FOR FURNISHING ALL MATERIALS, CONCRETE, SAND, GROUT, FORTAS, LABOR, EQUIPMENT AND OTHER INCIDENTALS NECESSARY TO COMPLETE THE ITEM. CARRIER PIPE SHALL BE MEASURED SEPERATLY.

DEKALB COUNTY, GA. Department of Watershed Management	**STANDARD DETAILS**	12/07
	Tunnel Detail	WATER Matters
	NOT TO SCALE	DETAIL NO. S-015

H:\Atlanta Workshare\Dekalb County - W_WW Stds\4.0 Project Engineering\4.1 CAD Design\Dekalb STD-Details\13.00_CAD\Sewer_Standard_Details\016 Typical Patch & Resurfacing Detail.dwg, Layout1, 1/8/2008 5:07:03 PM, hmangan

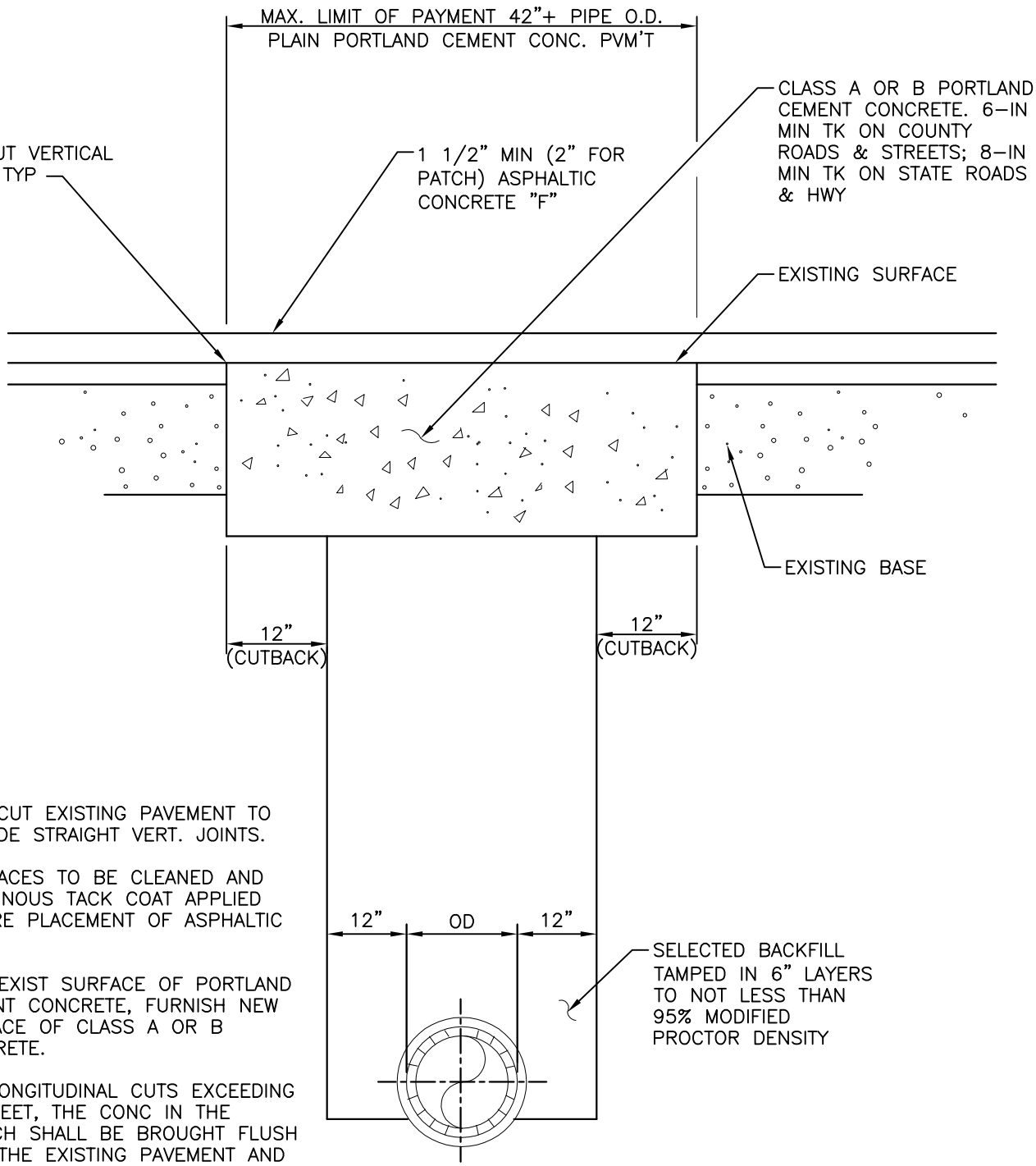

NOTES :

1. SAW CUT EXISTING PAVEMENT TO PROVIDE STRAIGHT VERT. JOINTS.
2. SURFACES TO BE CLEANED AND BITUMINOUS TACK COAT APPLIED BEFORE PLACEMENT OF ASPHALTIC TOP.
3. FOR EXIST SURFACE OF PORTLAND CEMENT CONCRETE, FURNISH NEW SURFACE OF CLASS A OR B CONCRETE.
4. ON LONGITUDINAL CUTS EXCEEDING 100 FEET, THE CONC IN THE TRENCH SHALL BE BROUGHT FLUSH WITH THE EXISTING PAVEMENT AND THE ENTIRE WIDTH OF ROADWAY RESURFACED W/ 1-IN MIN THK OF ASPHALTIC CONC.

DEKALB COUNTY, GA. Department of Watershed Management	STANDARD DETAILS	12/07
	Typical Patch and Resurfacing Detail	
	NOT TO SCALE	DETAIL NO. S-016

H:\Atlanta Workshare\Dekalb County - W_WW Stds\4.0 Project Engineering\4.1 CAD Design\Dekalb STD-Details\13.00_CAD\Sewer_Standard_Details\017 Sanitary Sewer Lateral Connection.dwg, Layout1, 2/22/2008 2:47:19 PM, mhofrei

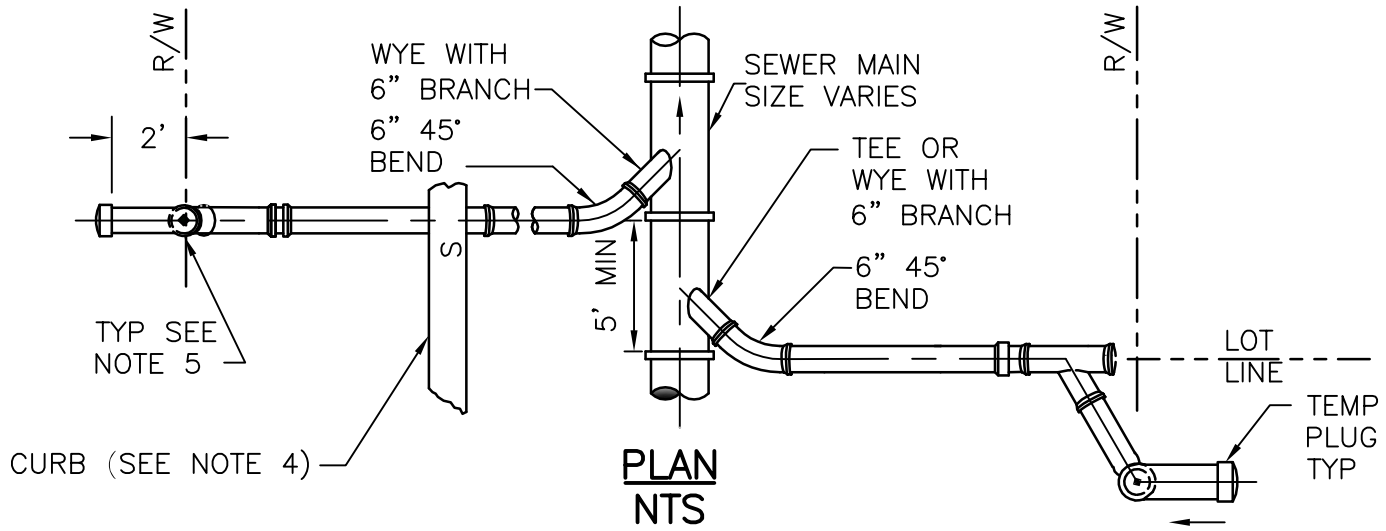

PLAN
NTS

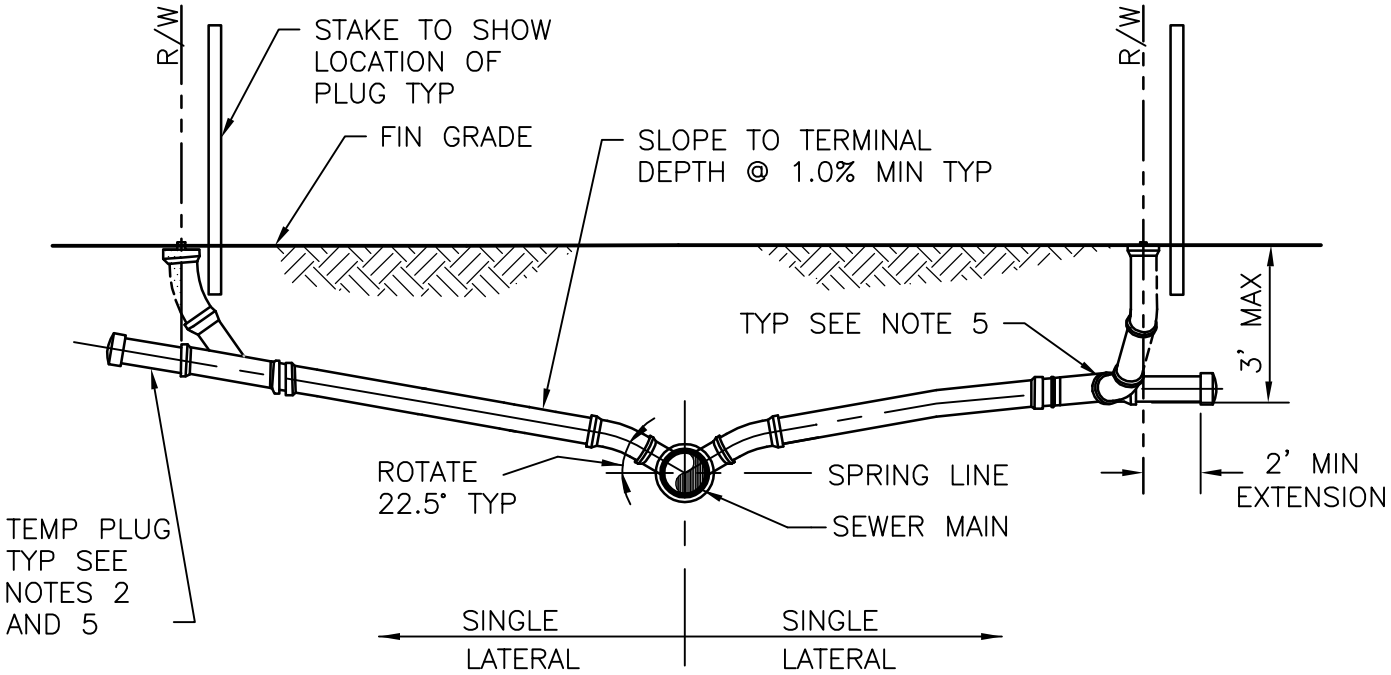

PROFILE
NTS

NOTES:

1. INVERT OF SERVICE LATERAL SHALL NOT ENTER SEWER MAIN BELOW SPRING LINE.
2. SERVICE LATERAL SHALL BE CAPPED BY DEVELOPER'S CONTRACTOR.
3. ALL FITTINGS SHOWN ARE TO BE INSTALLED.
4. SERVICE CONNECTIONS SHALL BE PERMANENTLY MARKED BY CUTTING AN "S" IN THE CURB DIRECTLY OVER THE LATERAL.
5. DEVELOPER'S CONTRACTOR WILL INSTALL CLEANOUT.

DEKALB COUNTY, GA. Department of Watershed Management	**STANDARD DETAILS**	12/07
	Sanitary Sewer Lateral Connection detail	WATER Matters
	NOT TO SCALE	DETAIL NO. S-017

H:\Atlanta Workshare\Dekalb County - W_WW Stds\4.0 Project Engineering\4.1 CAD Design\Dekalb STD-Details\13.00_CAD\Sewer_Standard_Details\018 Backfill And Allowable Trench Widths.dwg, Layout1, 2/22/2008 2:49:49 PM, mhof

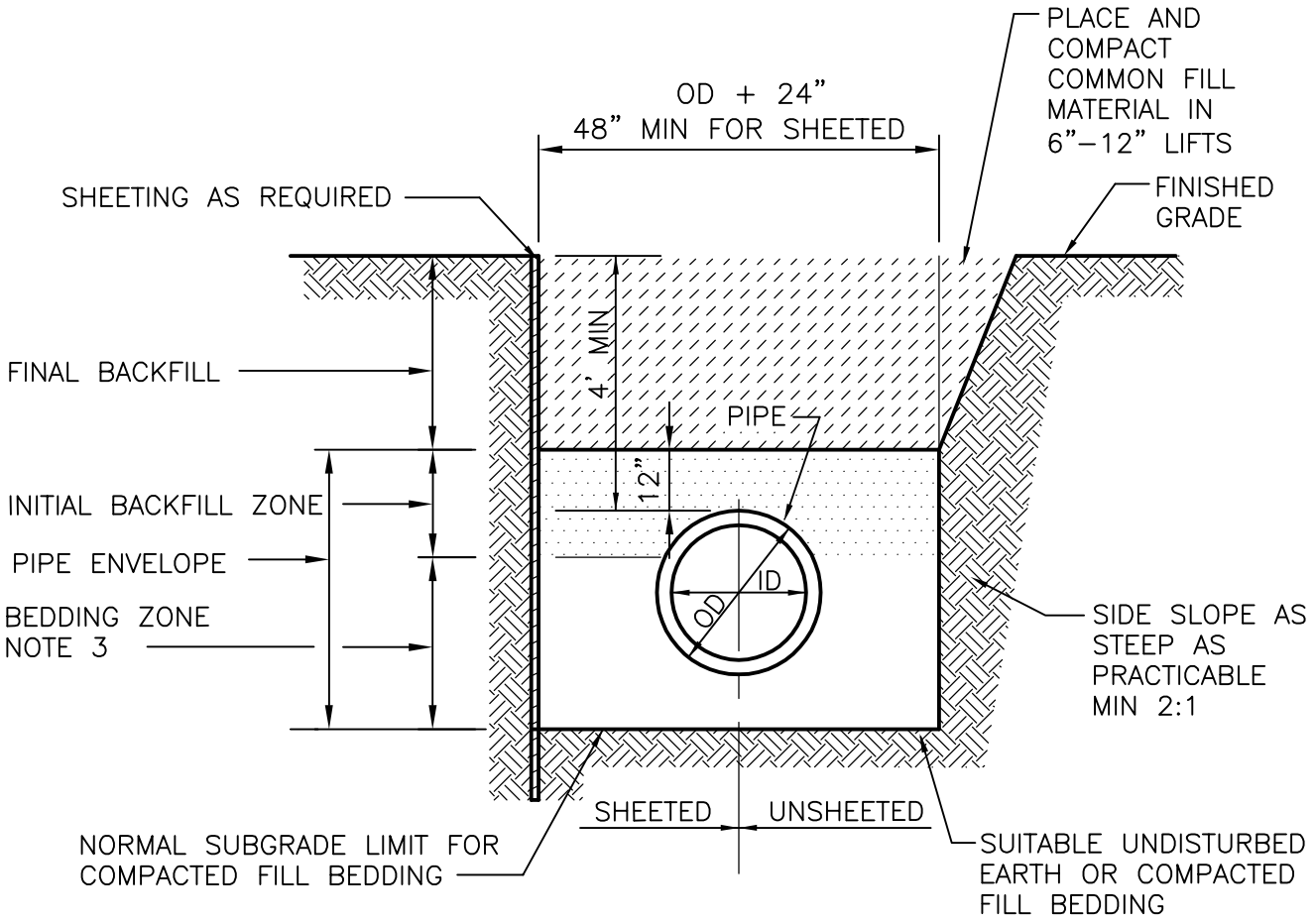

NOTES:

1. SEE DESIGN STANDARDS FOR ADDITIONAL BEDDING AND TRENCH BACKFILL REQUIREMENTS.
2. MINIMUM DEPTH OF COVER OVER GRAVITY SANITARY SEWER LINES SHALL BE 4'–0" AS MEASURED FROM TOP OF PAVEMENT TO TOP OF PIPE.
3. SEE STANDARD DETAILS S–012, S–013 AND S–014 FOR BEDDING REQUIREMENTS.
4. NO ROCK IN BACKFILL FOR FIRST 2'–0" ABOVE TOP OF PIPE.
5. BACKFILL TO BE NO. 57 STONE UNDER ROADWAYS AND PAVED AREAS.
6. BACKFILL SHALL NOT INCLUDE ROCK > 6 INCHES.

DEKALB COUNTY, GA. Department of Watershed Management	**STANDARD DETAILS**	12/07
	Backfill and Allowable Trench Widths Detail	
	NOT TO SCALE	DETAIL NO. S-018

H:\Atlanta Workshare\Dekalb County - W_WW Stds\4.0 Project Engineering\4.1 CAD Design\Dekalb STD-Details\13.00_CAD\Sewer_Standard_Details\019 Deep Service Connection Detail.dwg, Layout1, 2/15/2008 3:46:34 PM, dking, Tes

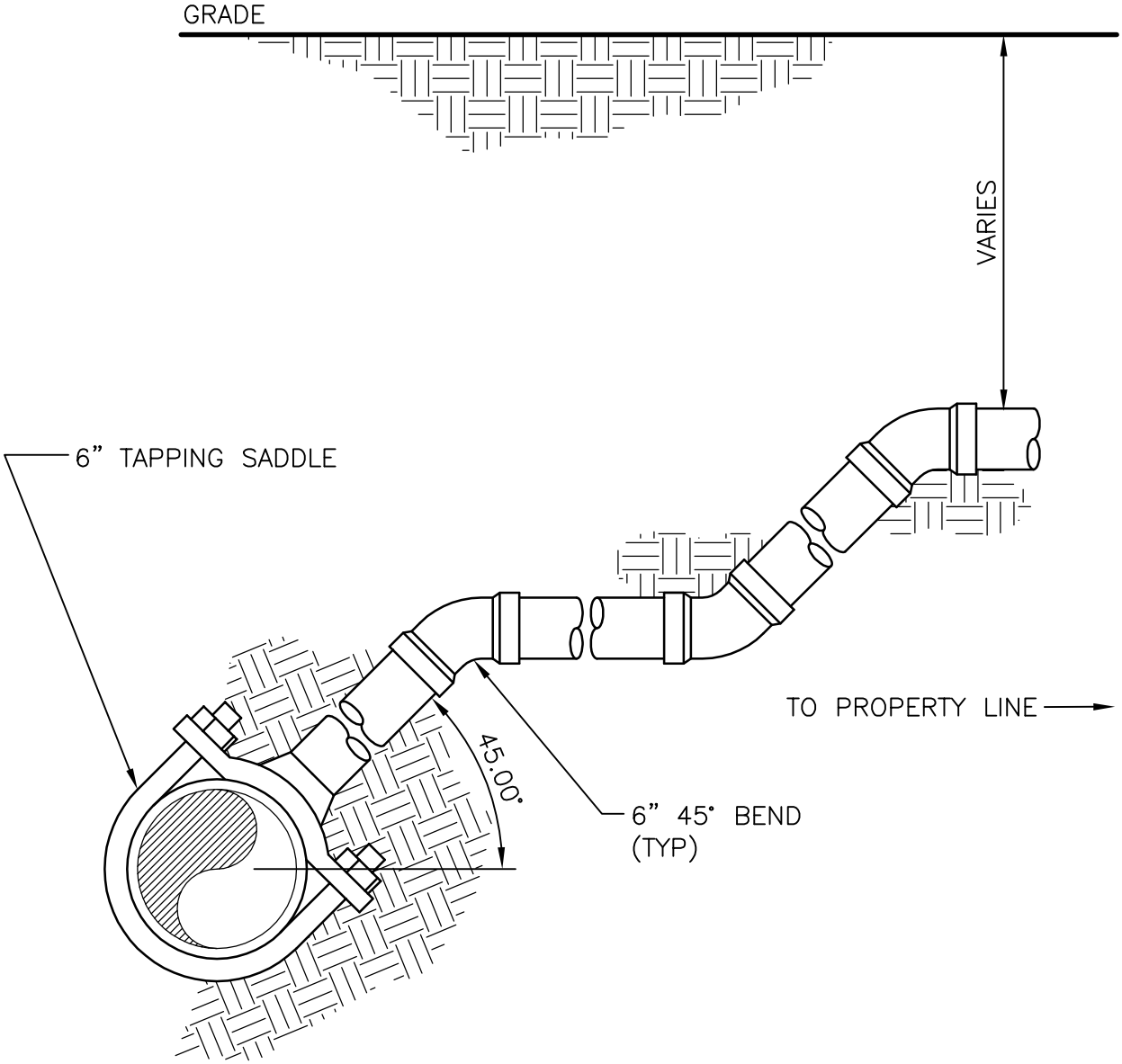

NOTES:

1. DEEP HOUSE CONNECTIONS MAY BE ALLOWED WHEN SEWER INVERT IS 12 FEET OR GREATER BELOW SURFACE.

2. STACKED SERVICE LINES PERMITTED UNDER ROADS ONLY WITH SPECIAL PERMISSION.

DEKALB COUNTY, GA. Department of Watershed Management	**STANDARD DETAILS**	12/07
	Deep Service Connection Detail	WATER Matters
	NOT TO SCALE	DETAIL NO. S-019

H:\Atlanta Workshare\Dekalb County - W_WW Stds\4.0 Project Engineering\4.1 CAD Design\Dekalb STD-Details\13.00_CAD\Sewer_Standard_Details\020Service Stub Location Detail.dwg, Layout1, 2/15/2008 3:47:38 PM, dking, Test

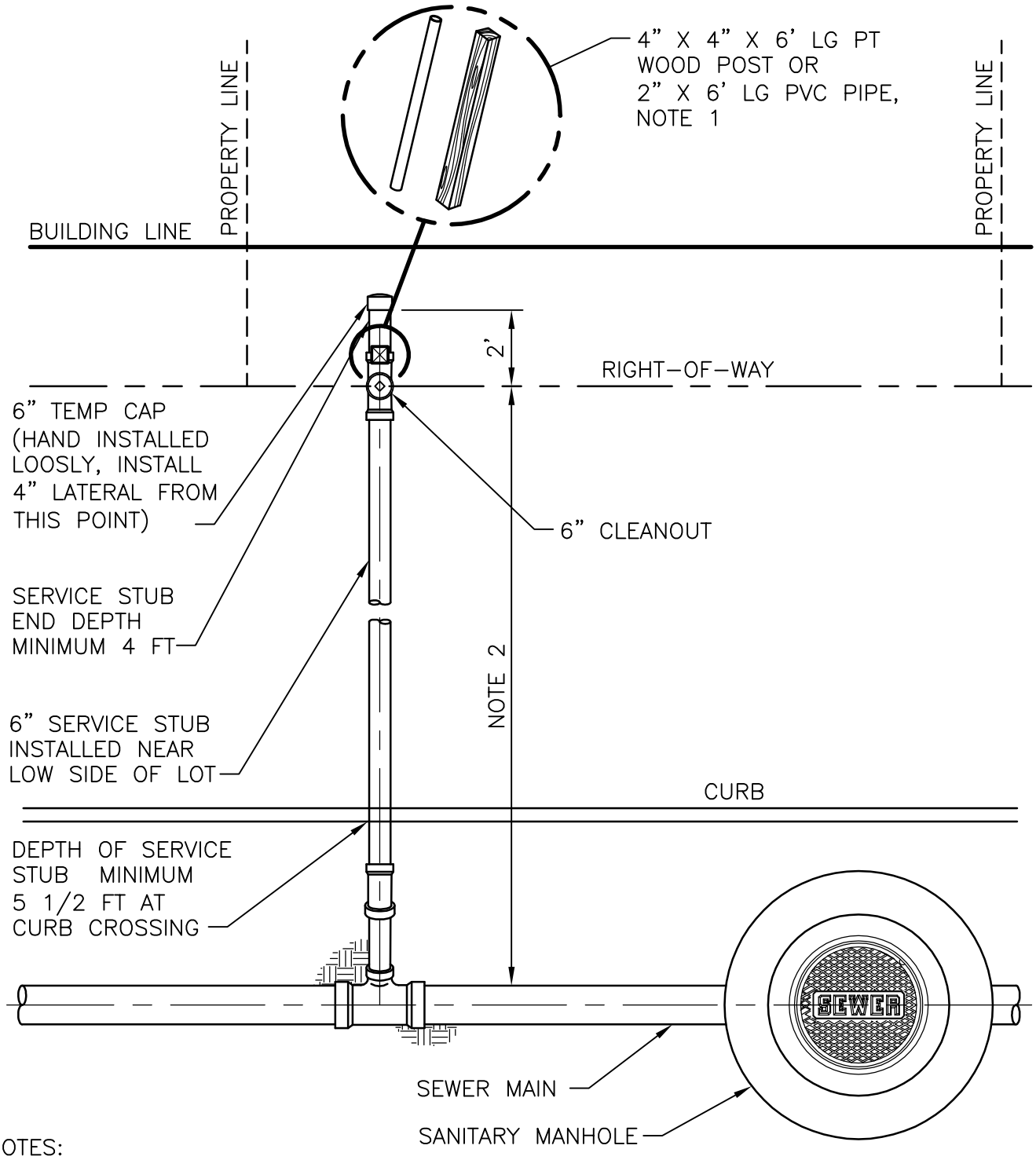

NOTES:

1. IDENTIFY AS PER OSHA SAFETY STANDARD SPECIFICATION 1910.44 UTILITY PROTECTION MARKING PAINT (GREEN)

2. MINIMUM LENGTH OF SERVICE STUB IS ONE FULL PIPE JOINT LENGTH OR TO THE RIGHT-OF-WAY. MAXIMUM LENGTH OF SERVICE STUB IS 75 FEET.

3. REFER TO S-011 FOR SERVICE AND CLEANOUT PROFILE

DEKALB COUNTY, GA. Department of Watershed Management	**STANDARD DETAILS**	12/07
	Service Stub Location Detail	WATER Matters
	NOT TO SCALE	DETAIL NO. S-020

H:\Atlanta Workshare\Dekalb County - W_WW Stds\4.0 Project Engineering\4.1 CAD Design\Dekalb STD-Details\13.00_CAD\Sewer_Standard_Details\021 Plug Location Detail.dwg, Layout1, 2/15/2008 3:49:38 PM, dking, Test

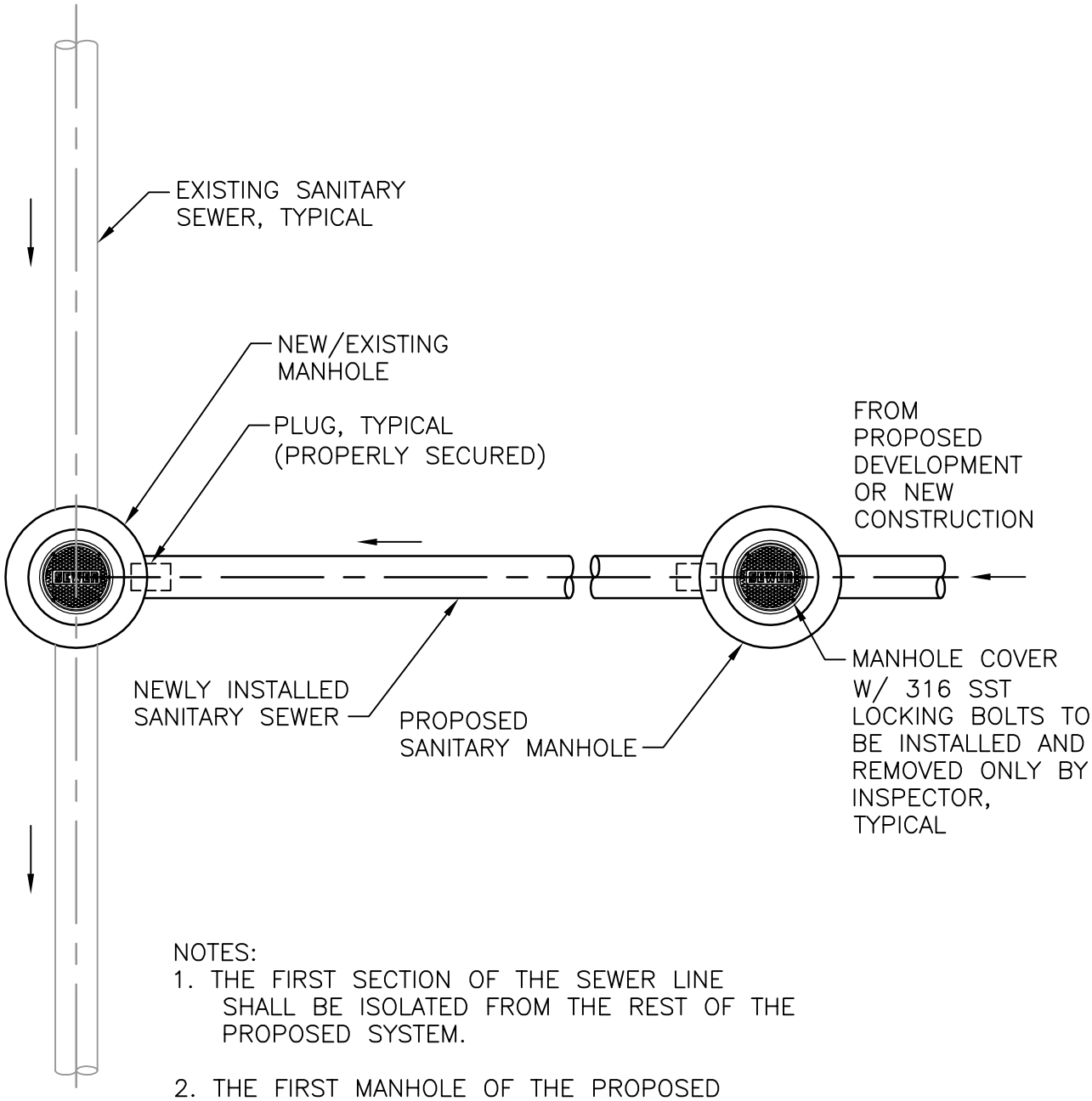

NOTES:

1. THE FIRST SECTION OF THE SEWER LINE SHALL BE ISOLATED FROM THE REST OF THE PROPOSED SYSTEM.

2. THE FIRST MANHOLE OF THE PROPOSED SYSTEM SHALL BE USED TO PUMP OUT ANY INFLOW/INFILTRATION, MUD, ETC., THAT ENTERED THE SYSTEM DURING CONSTRUCTION.

3. THE PLUGS SHALL NOT BE REMOVED UNTIL APPROVAL OF PROPOSED SEWER SYSTEM BY DCDWM INSPECTORS.

DEKALB COUNTY, GA. Department of Watershed Management	**STANDARD DETAILS**	12/07
	Plug Location Detail	WATER Matters
	NOT TO SCALE	DETAIL NO. S-021

H:\Atlanta Workshare\Dekalb County - W_WW Stds\4.0 Project Engineering\4.1 CAD Design\Dekalb STD-Details\13.00_CAD\Sewer_Standard_Details\022 Transition Coupling Detail.dwg, Layout1, 2/15/2008 3:50:44 PM, dking, Test

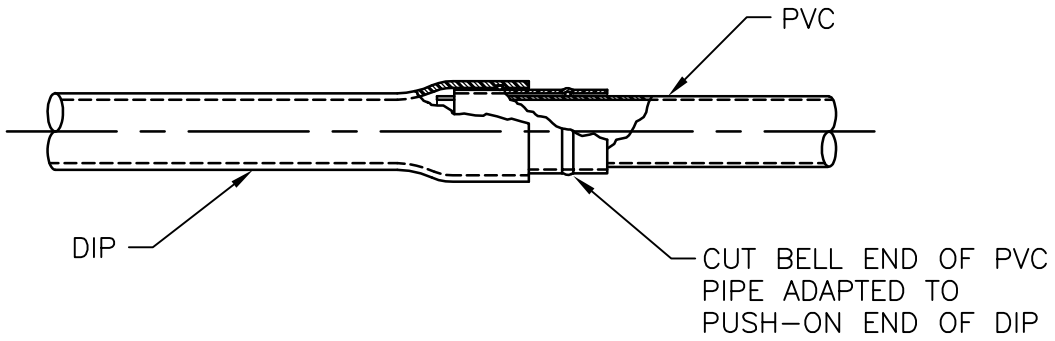

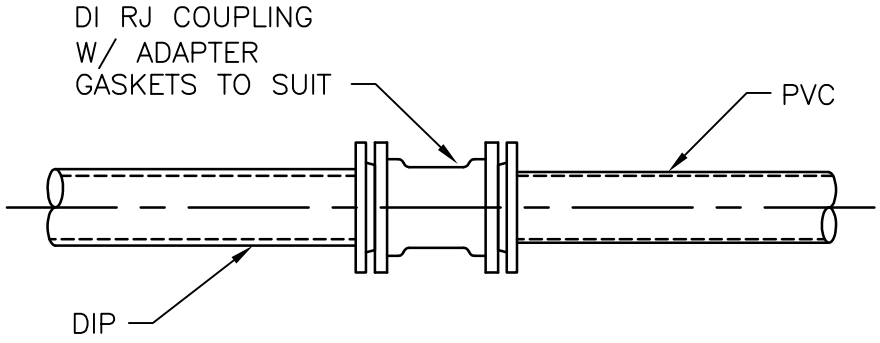

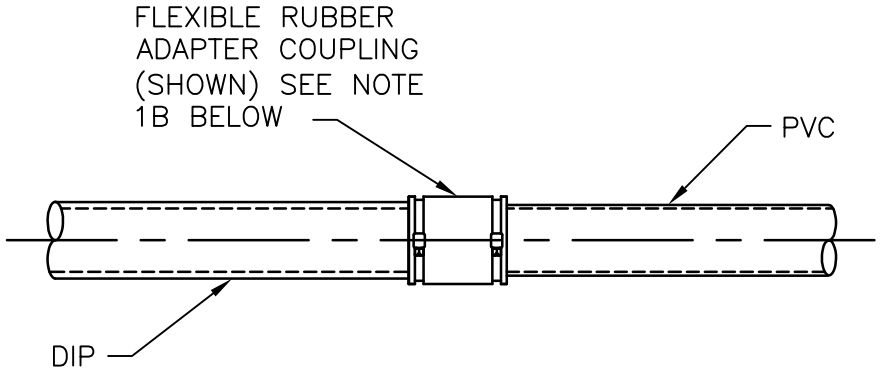

NOTES:

1. TRANSITION JOINTS: THE FOLLOWING SHALL BE UTILIZED FROM DUCTILE IRON PIPE TO PVC FOR PIPE SIZES LESS THAN 12 INCHES:

A. WATER MAIN TYPE COMPRESSION COUPLINGS WITH ADAPTER GASKETS AS NEEDED.

B. "FERNCO" TYPE FLEXIBLE RUBBER ADAPTER COUPLING (SHOWN) OR APPROVED EQUAL.

2. TRANSITION COUPLINGS SHALL BE CONSTRUCTED AS SHOWN ABOVE.

DEKALB COUNTY, GA. Department of Watershed Management	**STANDARD DETAILS**	12/07
	Transition Coupling Detail	WATER Matters
	NOT TO SCALE	DETAIL NO. S-022

H:\Atlanta Workshare\Dekalb County - W_WW Stds\4.0 Project Engineering\4.1 CAD Design\Dekalb STD-Details\13.00_CAD\Sewer_Standard_Details\023 Casing And Pipe Support Installation Detail.dwg, Layout1, 2/15/2008 3:51:25 PM,

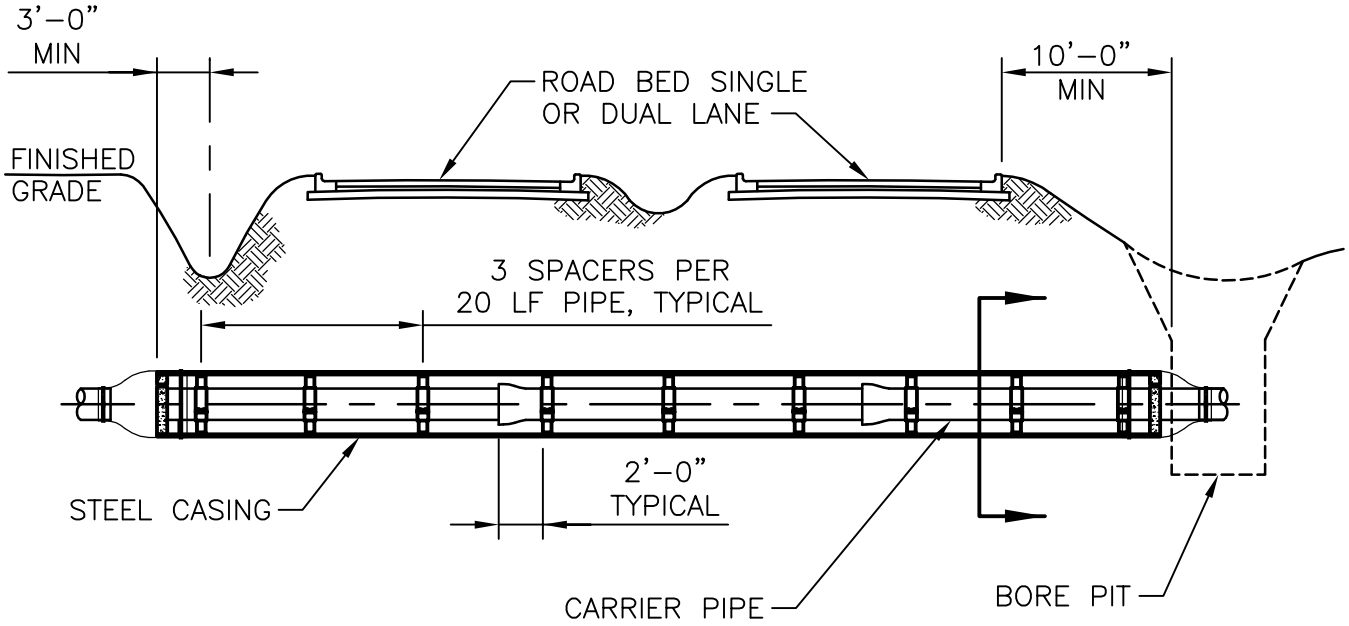

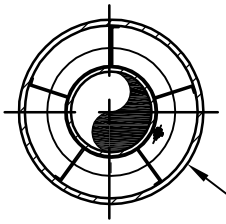

FOR COMPLETE SECTION DETAILS, SEE WATER DETAIL, W–024.

SECTION

NOTES:

1. SEE CASING AND PIPE SUPPORT WATER DETAIL W–024 FOR CASING TYPE AND MATERIAL, SPACER MATERIAL, TYPE, ASSEMBLY AND INSTALLATION.

DEKALB COUNTY, GA. Department of Watershed Management	**STANDARD DETAILS**	12/07
	Casing And Pipe Support Installation Detail	WATER Matters
	NOT TO SCALE	DETAIL NO. S-023

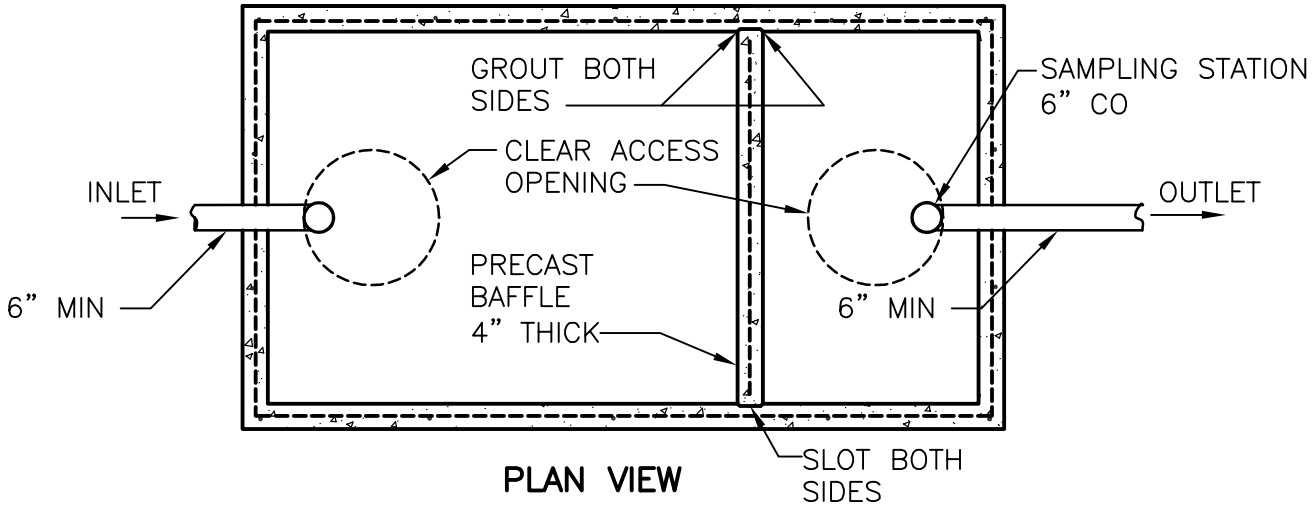

PLAN VIEW

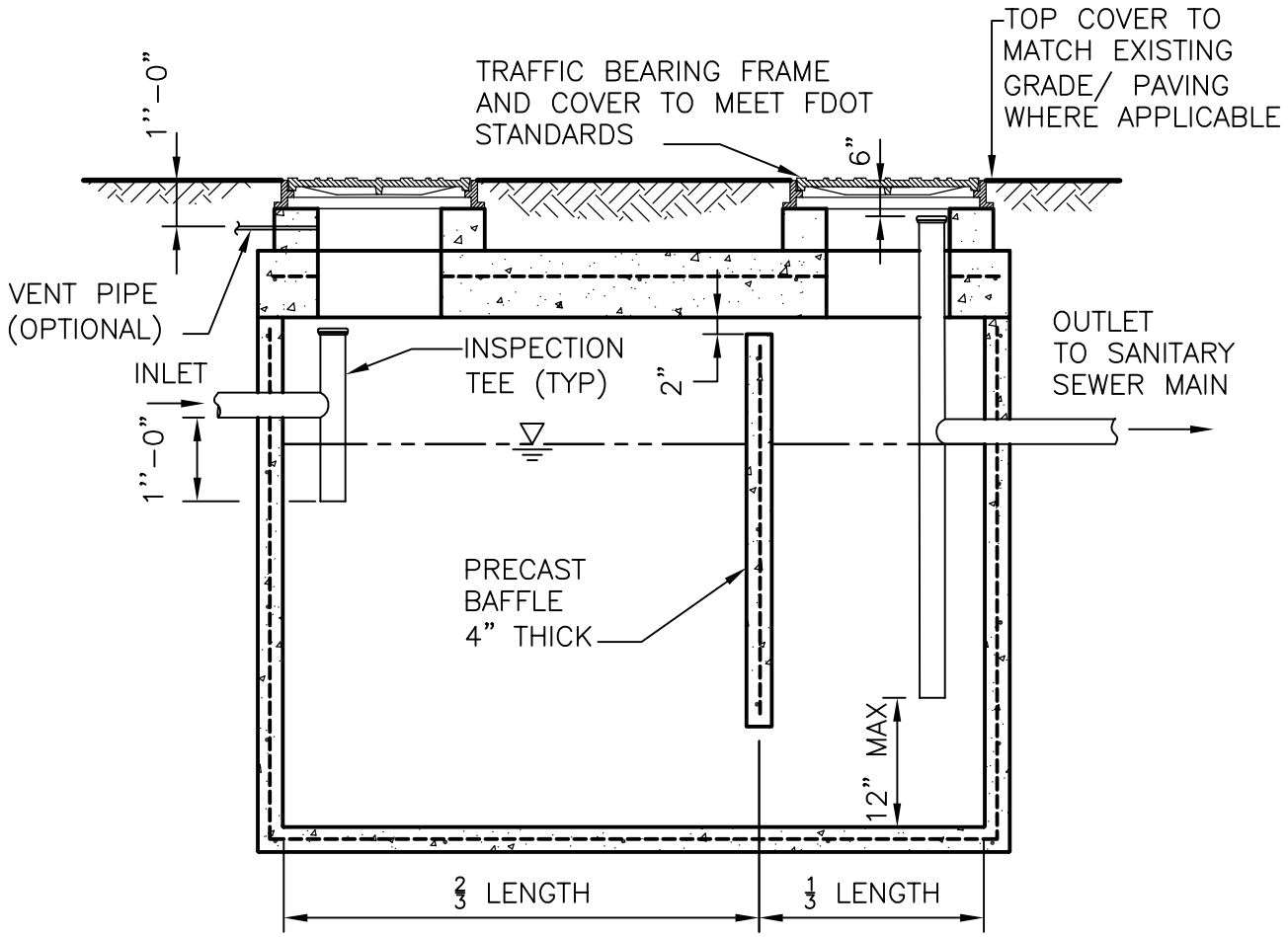

SECTION VIEW

NOTES:

1. SIZE OF GREASE TRAP SHALL BE IN ACCORDANCE TO DCDWM FOG ORDINANCE.
2. GRAY WATER ONLY, BLACK WATER SHALL BE CARRIED BY SEPARATE SEWER.
3. LOADS: H-20 TRUCK WHEELS WITH 30% IMPACT PER AASHTO.
4. INVERT OF INLET PIPE SHALL BE THREE (3) TO SIX (6) INCHES ABOVE OUTLET PIPE INVERT.

DEKALB COUNTY, GA. Department of Watershed Management	**STANDARD DETAILS**	12/07
	Grease Trap Detail	WATER Matters
	NOT TO SCALE	DETAIL NO. S-024

H:\Atlanta Workshare\Dekalb County - W_WW Stds\4.0 Project Engineering\4.1 CAD Design\Dekalb STD-Details\13.00_CAD\Sewer_Standard_Details\024 Grease Trap Detail.dwg, Layout1, 2/15/2008 3:52:04 PM, dking, Test

H:\Atlanta Workshare\Dekalb County - W_WW Stds\4.0 Project Engineering\4.1 CAD Design\Dekalb STD-Details\13.00_CAD\Sewer_Standard_Details\025 Tracer Wire Detail For PVC.dwg, Layout1, 2/15/2008 3:53:48 PM, dking, Test

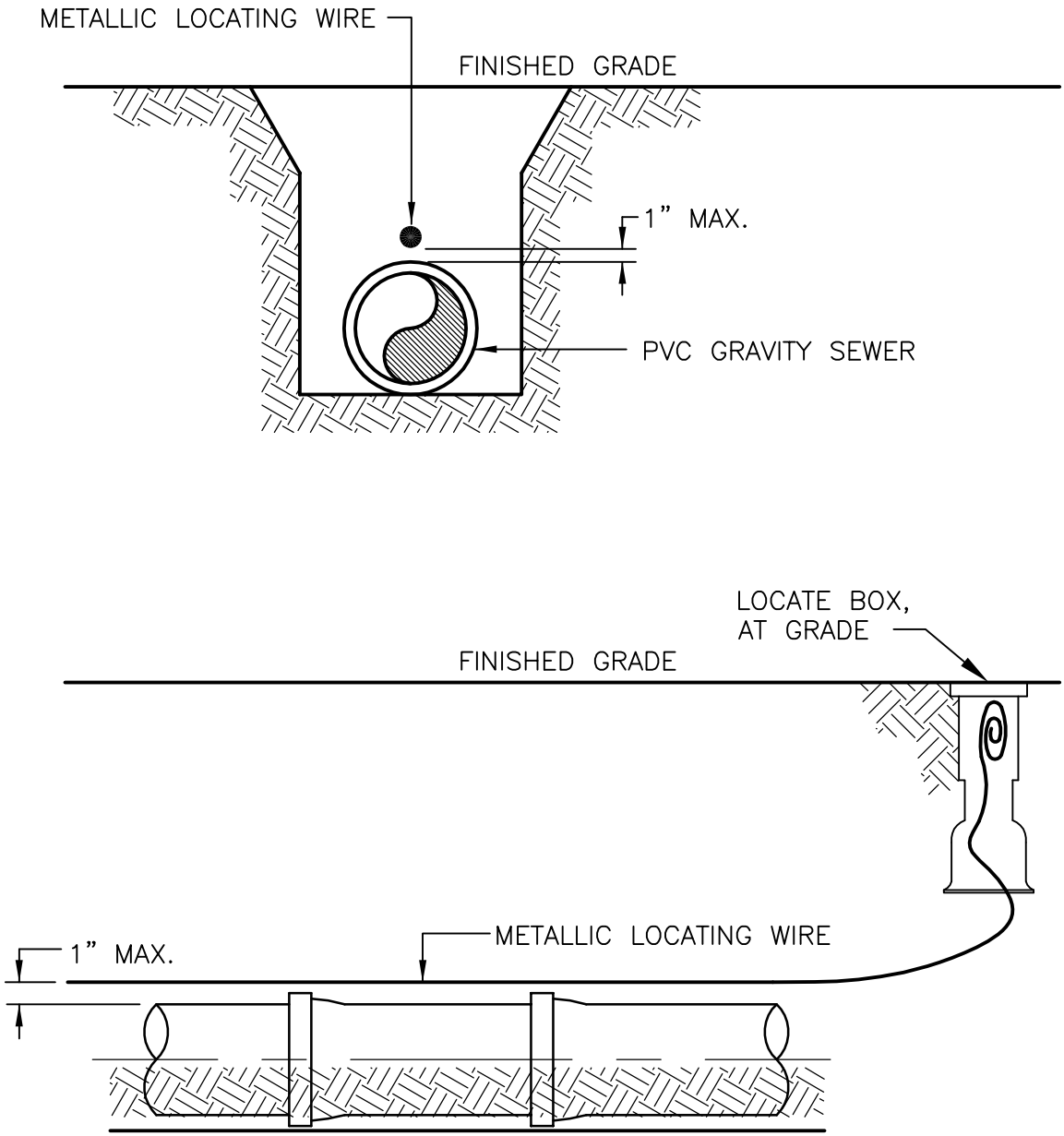

NOTES:

1. PVC PIPE SHALL REQUIRE INSULATED METALLIC LOCATING WIRE (12 GAUGE COPPER) CAPABLE OF DETECTION BY A CABLE LOCATOR
2. THE CABLE SHALL BE BURIED DIRECTLY ABOVE THE CENTERLINE OF THE PIPE. LOCATING WIRE SHALL TERMINATE AT THE MANHOLE FRAME
3. USE DUCT TAPE AS NECESSARY TO HOLD WIRE DIRECTLY ON THE TOP OF THE PIPE.

DEKALB COUNTY, GA. Department of Watershed Management	**STANDARD DETAILS**	12/07
	Tracer Wire Detail For PVC	WATER Matters
	NOT TO SCALE	DETAIL NO. S-025

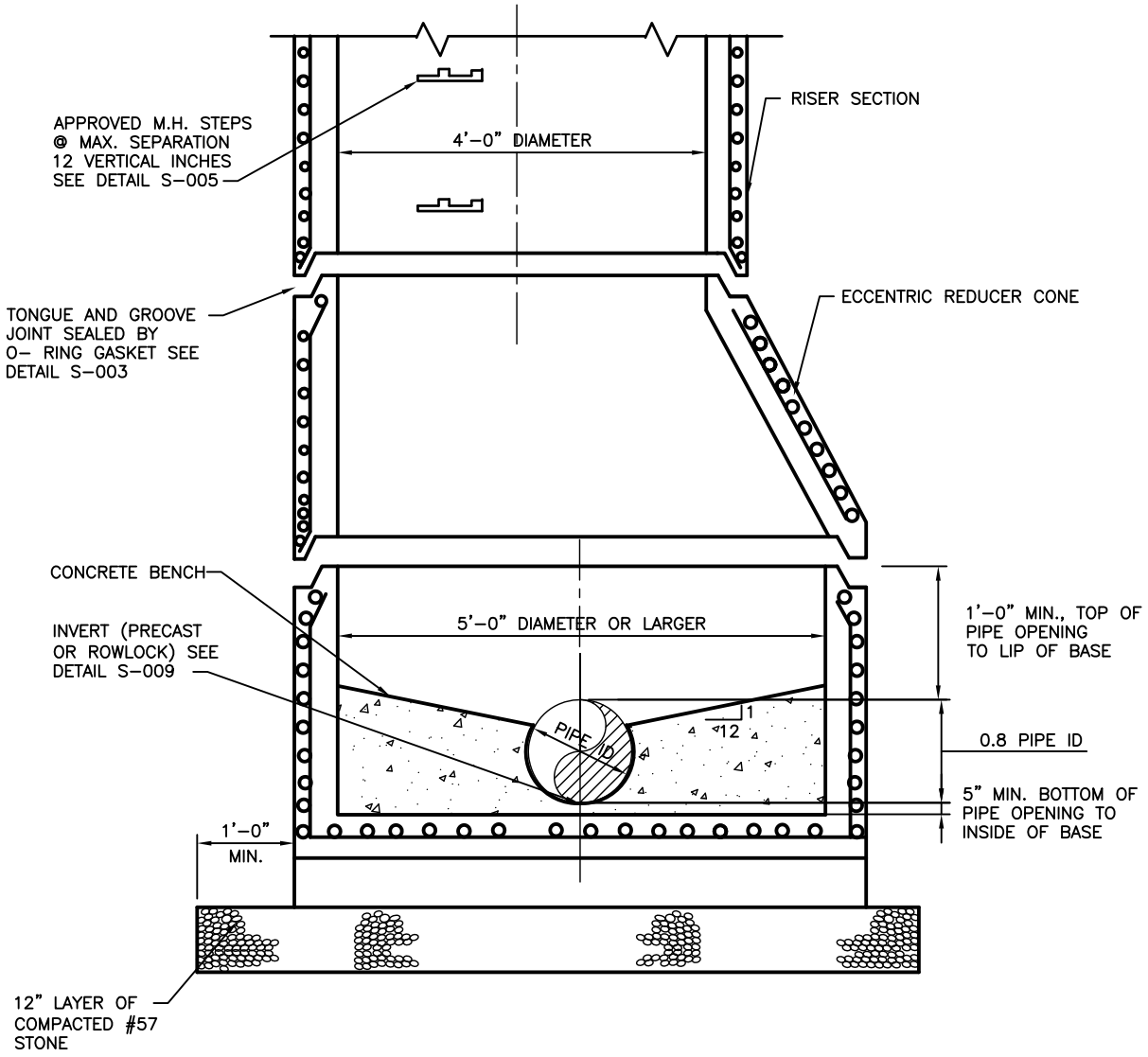

DEKALB COUNTY, GA.
Department of Watershed Management

STANDARD DETAILS

07/08

LARGE DIAMETER MANHOLE BASE (ECCENTRIC) DETAIL

NOT TO SCALE

DETAIL NO. S-026

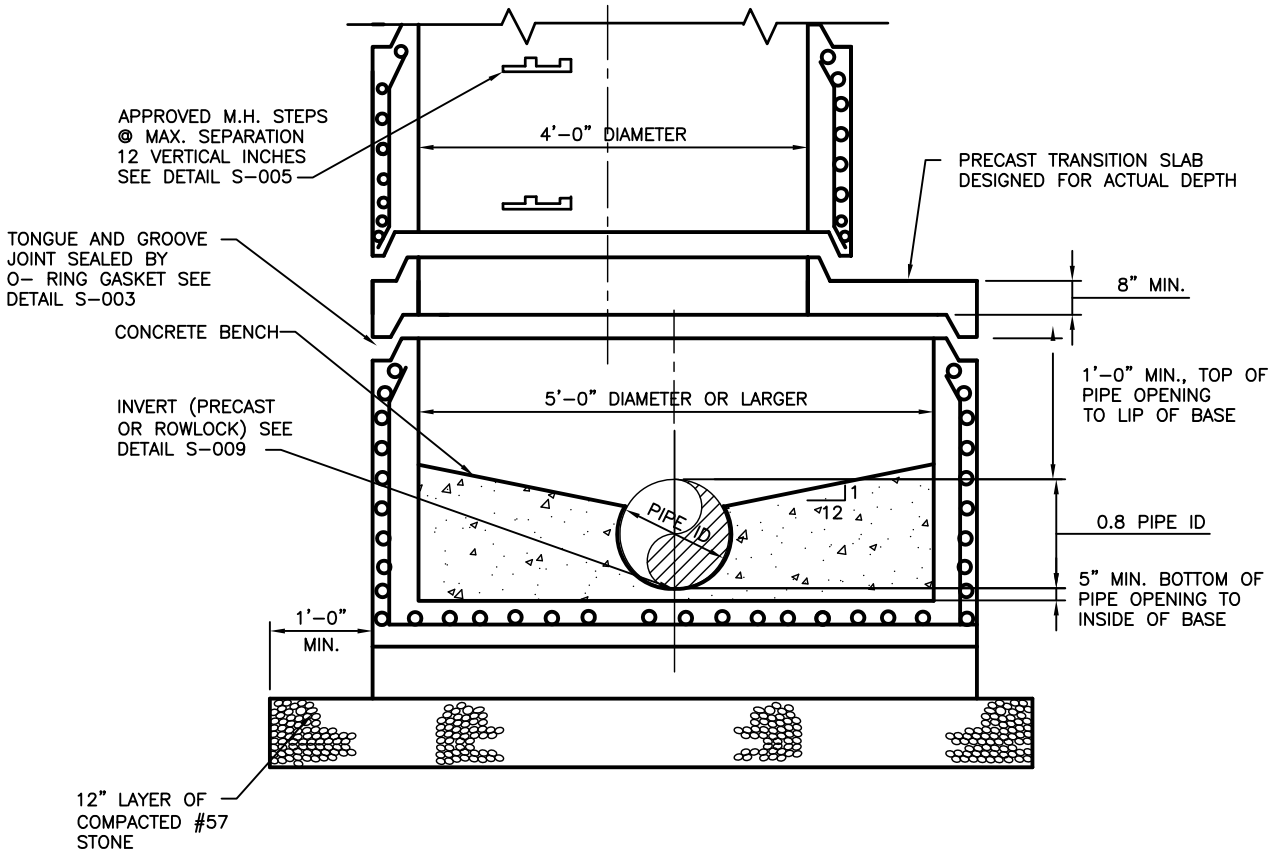

DEKALB COUNTY, GA.
Department of Watershed Management

STANDARD DETAILS

07/08

LARGE DIAMETER MANHOLE BASE DETAIL

NOT TO SCALE

DETAIL NO. S-027

APPENDIX J

GRAVITY SANITARY SEWER STANDARD: FORMS

DEKALB COUNTY SEWER EASEMENT

GEORGIA, DEKALB COUNTY
PROJECT NAME:
PROJECT No:

This indenture made this the _____ day of _____, 2007 by and between **_____, GRANTOR,** and **DEKALB COUNTY, GEORGIA, GRANTEE.**

WITNESSETH:

That for and in consideration of the sum of ($1.00) One Dollar, receipt and sufficiency whereof hereby acknowledged, and of the benefits to be conferred upon Grantor's property of a sewer line, Grantor does hereby grant, bargain, sell and convey and by these presents for the construction, installation, operation, inspection, maintenance, use and repair of a sewer line, with the right-of-entry for purposes of inspection and repair, over and across that tract of land lying and being in **Land Lot 000** of the **00th District**, **DeKalb County, Georgia**, as shown on the plat dated _____; revised _____; and being more particularly depicted on **Exhibit(s) "A & B"** attached hereto and made a part hereof by this reference; **DEKALB TAX ID # 00-000-00-000.**

The construction and installation of said sewer line shall be conducted with as little inconvenience to the Grantor or tenant(s) as is consistent with reasonable progress and the property shall be restored to a reasonably clean and good condition upon completion of the work.

Upon completion of construction of the sewer line, the construction easement herein and depicted on the attached plat, shall terminate and Grantee shall have a permanent _____ foot easement limited to _____ feet on each side of the centerline of said sewer line.

The undersigned does hereby agree to release, hold harmless and indemnify DeKalb County, Georgia from any and all claims and causes of action of any nature by the holder or holders of any mortgage or lien on the undersigned's real property. The undersigned hereby accepts as full and final compensation the above-stated sum as consideration for the property interest acquired by DeKalb County and accepts said sum as the owner of the real property and on behalf of any and all mortgage or lien holders. Grantor hereby warrants that it has the right to sell and convey said easement(s) and binds itself, its successors and assigns forever to defend by virtue of these presents.

IN WITNESS WHEREOF the Grantor has hereto set its hand and seal the day and year above written.

Signed, Sealed and Delivered in the presence of: (**ENTITY NAME)**

_____ _____
Witness **By:**

_____ _____
Notary Public

Parcel No. 00

DEKALB COUNTY SEWER EASEMENT

GEORGIA, DEKALB COUNTY
PROJECT NAME:
PROJECT No:

This indenture made this the _____ day of _____, 2007 by and between **____, GRANTOR,** and **DEKALB COUNTY, GEORGIA, GRANTEE.**

WITNESSETH:

That for and in consideration of the sum of ($1.00) One Dollar, receipt and sufficiency whereof hereby acknowledged, and of the benefits to be conferred upon Grantor's property of a sewer line, Grantor does hereby grant, bargain, sell and convey and by these presents for the construction, installation, operation, inspection, maintenance, use and repair of a sewer line, with the right-of-entry for purposes of inspection and repair, over and across that tract of land lying and being in **Land Lot 000** of the **00th District**, **DeKalb County, Georgia**, as shown on the plat dated _____;revised _____; and being more particularly depicted on **Exhibit(s) "A & B"** attached hereto and made a part hereof by this reference; **DEKALB TAX ID # 00-000-00-000.**

The construction and installation of said sewer line shall be conducted with as little inconvenience to the Grantor or tenant(s) as is consistent with reasonable progress and the property shall be restored to a reasonably clean and good condition upon completion of the work.

Upon completion of construction of the sewer line, the construction easement herein and depicted on the attached plat, shall terminate and Grantee shall have a permanent _____ foot easement limited to _____ feet on each side of the centerline of said sewer line.

The undersigned does hereby agree to release, hold harmless and indemnify DeKalb County, Georgia from any and all claims and causes of action of any nature by the holder or holders of any mortgage or lien on the undersigned's real property. The undersigned hereby accepts as full and final compensation the above-stated sum as consideration for the property interest acquired by DeKalb County and accepts said sum as the owner of the real property and on behalf of any and all mortgage or lien holders. Grantor hereby warrants that s/he has the right to sell and convey said easement(s) and binds her/himself, her/his successors and assigns forever to defend by virtue of these presents.

IN WITNESS WHEREOF the Grantor has hereto set her/his hand and seal the day and year above written.

Signed, Sealed and Delivered in the presence of:

_____	_____
Witness	**(NAME)**
_____	_____
Notary Public	

Parcel No. 00

DISTRIBUTION:
(1) P&E/O&I SECTION (WHITE) PROJ. FILE
(2) C&M/PROD. CONT. (YELLOW) ST. FILE
(3) FILE: C&M/TV SECTION (PINK) ST. FILE
(4) DRAFTING

DEPARTMENT OF
WATERSHED MANAGEMENT
CCTV INSPECTION REPORT

☐ SANITARY SEWER ☐ OTHER

AREA: _____ TRUCK: _____
DIST. _____ LL _____
STREET _____
MANHOLE NO. _____ TO NO. _____
W. O. NO. _____ DATE _____
PROJ. NO. _____

For Clear Copies → Please use ball point pen

REASON FOR INSPECTION: ☐ ROUTINE ☐ SPECIAL _____

LINE	CREW LEADER AND DATE	TV: CAMERA (4 1 / 3 2) QUADRANT 1	2	3	4	PICTURES MADE NO. PHOTO	VIDEO TAPE	DIST. IN FEET	LOCATION DATA AND COMMENTS
	A	B	C	D	E	F	G	H	
1									
2									
3									
4									
5									
6									
7									
8									
9									
10									
11									
12									

LINE DATA:
PIPE SIZE _____ IN.
TYPE OF PIPE _____
TYPE OF JOINT _____
SECTION LENGTH _____ FT.

PIPE CONDITION _____
MANHOLE # _____
GRADE/M/H DEPTH _____

LOCATION DIAGRAM
(Circle arrow in direction of measurement)

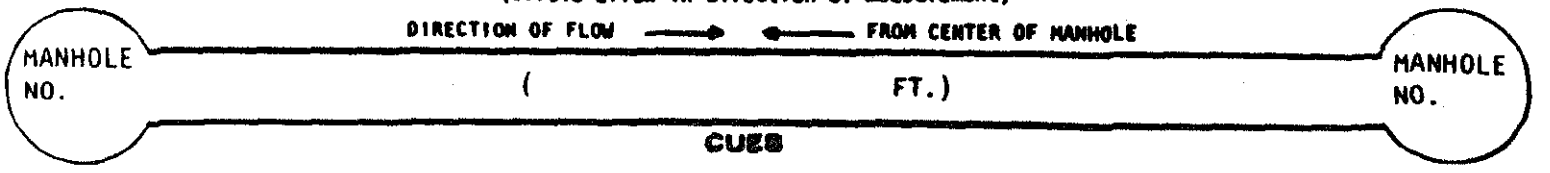

FORM NO. 10037

CUES

APPENDIX K

SANITARY SEWER PUMPING STATION AND FORCE MAIN STANDARD: REFERENCE MATERIAL

Approval of the plans does not relieve the contractor from complying with the latest version of DCDWM Sanitary Sewer Pumping Station and Force Main Design Standards.

It is the responsibility of the Developer/Contractor to review the Sanitary Sewer Pumping Station and Force Main Design Standards. Omission or deviations on part of the Developer/Contractor's Engineer from the Sanitary Sewer Pumping Station and Force Main Design Standards shall be grounds for rejection of the pumping station or force main design submittal.

DEKALB COUNTY WATERSHED MANAGEMENT CHECK LIST FOR SANITARY SEWER PUMP STATION DESIGN REVIEW & APPROVAL

Review No: 1 2 3 4 5 6	Project Name:
Reviewed By:	Street Address:
Date:	Engineer/Developer Name:
	Engineer/Developer Phone:

Lift/Pump Station Standards can be purchased at the following location.

Technical Services
DeKalb County-Department of Watershed Management
1580 Roadhaven Drive
Stone Mountain, GA 30083
770-621-7272

CHECK LIST PROCEDURE

1. **ADDRESS AND INCORPORATE COMMENTS MARKED IN RED.**
2. **RESPOND ON CHECK LIST IN GREEN TO INDICATE COMMENT WAS ADDRESSED.**
3. **MENTION DRAWING NUMBER WHERE COMMENT WAS INCORPORATED.**
4. **PLACE ALL LIFT STATION DRAWINGS IN ONE LOCATION-PREFERABLY AT THE END, AND INCLUDE THEM IN THE INDEX OF DRAWINGS.**
5. **RETURN CHECK LIST, RED LINE PLANS AND REVISED PLANS TO THE REVIEWER**

Note: All design drawings and associated calculations, to be sealed, signed and dated by a Georgia - Licensed Professional Engineer.

IMPORTANT PHONE NUMBERS

Cummins/Onan Power Generation
1-800-888-6626

ITT Flygt
(770)932-4320

Motorola
(404)505-7217 or (404)210-1896

ALL SHEETS:

- ☐ Completed "Design Review and Approval Form" as well as "Pump Station Design Calculations Form" (see “Potable Water Main, Gravity Sanitary Sewer, and Sanitary Sewer Pumping Station and Force Main Design Standards” Appendix L for sample forms).
- ☐ Location map depicting property lines, land lot lines, buildings, existing utilities, creeks, stream buffers, and roads.
- ☐ Final plans shall be on 24”x36” paper sheets.
- ☐ Each sheet except the cover sheet shall have a title block in the lower right corner containing:
  - ☐ Project name
  - ☐ Project number (if DeKalb County project)
  - ☐ Sheet number
  - ☐ Total number of sheets
  - ☐ Scale
  - ☐ Drawer’s, Designer’s and Checker’s initials and date
  - ☐ Date (month/day/year)
- ☐ All sheets shall be sealed, signed and dated by a Registered Civil Engineer in State of Georgia

COVER SHEET

The Engineer shall provide a cover sheet with the following information:

- ☐ Project name
- ☐ Drawing Index which provides sheet number and description of corresponding sheet
- ☐ Vicinity Map
- ☐ District and Land Lot number
- ☐ Engineering firm’s name, address and telephone number
- ☐ Developer’s name, address and telephone number
- ☐ Date (month/day/year)
- ☐ Signature Approval Blocks

SHEET 2

The Engineer shall provide a general sheet containing the following information:

- ☐ General notes covering important parameters as outlined in the DeKalb County Design Standards for Water, Sanitary Sewer, and Sanitary Sewer Pump Stations
- ☐ Other notes as necessary to cover situations **not** covered by the Design Standards or by the DCDWM Standard Details
- ☐ Legend showing symbols and line types used within the drawings
- ☐ Engineering firm's title block containing firm's name, address, and phone number
- ☐ Elevation datum and benchmark information in Georgia State Plane Coordinates
- ☐ Note to be shown on plan: **Contractor shall notify DeKalb County Department of Watershed Management Inspector at 770-621-7212 48 hours prior to start of construction.**

PUMP STATIONS GENERAL

- ☐ Pump Station Service Area Map clearly showing basin delineation of the area draining to the pump station by gravity
- ☐ Show all offsite areas that have the potential to discharge to the proposed pump station. Use the table found in Section IV.C.3.c of the "Potable Water Main, Gravity Sanitary Sewer, and Sanitary Sewer Pumping Station and Force Main Design Standards" to calculate offsite flows. A future land use map is available from DeKalb County Department of Planning and Department-phone (404)371-2518.
- ☐ Pump Station Driveway Plan & Profile
- ☐ Pump Station Overflow Vault Profile
- ☐ Pump Station Gravity Sewer Influent Profile
- ☐ Pump Station to be located at the lowest point in the basin. Show ground contours and 100 year flood contour as well as 25 foot & 75 foot stream buffers (if applicable).
- ☐ Average Daily Flow (ADF) to be calculated based on Sanitary Flow Contribution numbers specified in the table provided in Section IV.C.3.b of the "Potable Water Main, Gravity Sanitary Sewer, and Sanitary Sewer Pumping Station and Force Main Design Standards".
- ☐ Capacity Calculations for the receiving downstream sewer, to justify it is not capacity limited
- ☐ Install Safety Placards for all pump station structures and equipment as per OSHA standards. Show details on standard detail drawings for contractor to follow.

- ☐ Refer to “Potable Water Main, Gravity Sanitary Sewer, and Sanitary Sewer Pumping Station and Force Main Design Standards” for more details.

PUMPS

- ☐ Pumps (Type N) & Panels to be manufactured by ITT Flygt Corp., and the contact no. is (770)932-4320. Alternatively Pre-Engineered Package Submersible Wastewater Lift Station, supplied by Romtec Utilities (Phone: 541-496-3541) may be approved by DCDWM.
- ☐ System Head Curve for different "C" values for new and aged pump conditions.
- ☐ Pump details, specifications and shop drawings as per standards. Explosion proof Submersible Constant Speed Pumps are to be used on all new pump stations. Variable Speed Pumps shall be approved on a case-by-case basis.
- ☐ Pump size and dimensions, as part of pump schedule.
- ☐ Pump clearances between pump-to-pump and pump-to-sidewall as per manufacturer's recommendation. Show all dimensions on wet well cross section.
- ☐ Water Level Sensors shall be a submersible pressure level transducer and three (3) mercury sealed type float switches connected to a PLC.

WET WELL

- ☐ Walls shall be cylindrical with a minimum 6 foot diameter.
- ☐ Minimum depth of wet well to be 8 feet.
- ☐ Indicate high & low ground water elevations. Provide sub-surface drainage around wet well base, such that the invert of the drain pipe day lights at an elevation at least 3 feet below the base of the wet well-to keep the ground water as low as possible around the wet well.
- ☐ Provide anti-flotation calculations to justify size of anti-flotation collar. The anti-flotation collar shall be an integral part of the wet well casting process.
- ☐ Interior of concrete wet well shall have a fully adhered HDPE lining system (minimum thickness 5 millimeters) installed at the foundry as an integral part of the concrete casting process. Surface areas which cannot be covered by the 5 mm HDPE liner shall be coated with a 5 millimeter laminate build-up consisting of 40% fiber glass by mass and minimum 25% resin by mass.

- ☐ If ground water is encountered, then provide a fully adhered exterior HDPE lining system (minimum thickness *2* millimeters) in addition to the interior HDPE liner stated above-installed at the foundry as an integral part of the concrete casting process.
- ☐ Indicate Pump Control Elevations in the Wet Well for the following conditions: High Level Alarm, Lag Pump On, Lead Pump On, Pumps Off, and Low Level Alarm.
- ☐ Mark Storage Volume above the high-level alarm and up to the lowest point of overflow. This volume shall be greater than or equal to volume generated over three hours at peak design flow. Backflow of sewage into manholes upstream of the wet well is not permitted. In lieu of storing the total three hour peak flow volume within the wet well, an overflow vault may be used.
- ☐ Provide calculations to justify adequacy of storage volume provided in the Wet Well or Overflow Vault. Overflow Vault to have access manhole and a minimum of 2 millimeter HDPE liner.
- ☐ Entry hatch shall be large enough to remove pumps for servicing,
- ☐ No ladders shall he permitted in wet well.
- ☐ Provide hoist for equipment outside the wet well as per ITT Flygt specs.
- ☐ Wet well floor shall have a minimum slope of 1:l to the hopper bottom.
- ☐ Sump to be designed as per manufacturer's recommendation for a specific pump.
- ☐ Only one sewer line (having flat slope and minimum drop to prevent churning of sewage and air entrapment) to enter a wet well.
- ☐ Electric connections in the wet well shall be explosion proof.

VALVE & METER COMBINED VAULT

- ☐ Valve details, specifications, and shop drawings.
- ☐ Minimum 12 foot by 6 foot in size.
- ☐ Combined Vault shall be below grade, but adjacent to the wet well, have a 2% sloped concrete floor with sump, concrete side walls and an aluminum hatches.
- ☐ Combined Vault sump to be connected to the wet well via a drainage pipe, check valve and gate valve to drain rain water. The valves shall prevent back flow of wastewater into the vault.
- ☐ Check Valves to be placed upstream of Shutoff Valves.
- ☐ Pressure Gauge Taps with diaphragm mounted seals shall be located on each pipe upstream of the check valve.

- ☐ Flow meter details, specifications, and shop drawings
- ☐ Flow Meter to be installed downstream of Valves, minimum 5 feet on a straight length of pipe upstream and 5 feet downstream of the meter.

GENERATOR

- ☐ Standby Generator (from Cummins/Onan only) details, specifications, and shop drawings.
- ☐ The standby generator shall have adequate capacity to run all pumps, equipment, lifting hoist, lighting, telemetry, etc. simultaneously. The engineer shall provide submittals to justify adequate capacity for review and approval by DCDWM.
- ☐ Automatic Transfer Switch specifications and shop drawings.
- ☐ Automatic Transfer Switch to be rated for 100% of full load, and placed in a NEMA 4X enclosure. Power outage, or low voltage, shall be experience for 30 seconds before the station is switched to generator power.
- ☐ Generators shall meet all new EPA air emission standards, and be equipped with auxiliary systems, such as batteries, battery charger, block heater, etc.
- ☐ Generators are to be installed to operate on natural gas.
- ☐ Leak detection device in the interstitial space for sensing fuel leakage. This device to be connected to generator telemetry.
- ☐ Provide Generator Natural Gas Calculations.

TELEMETRY

- ☐ Telemetry equipment details, specifications, and shop drawings.
- ☐ Telemetry system to be capable of sending signals to personnel 24 hours per day, 365 days per year.
- ☐ RTU unit to be installed inside its own NEMA 4X enclosure, and be equipped with an antenna and pole.
- ☐ Telog RS-33u-PLC Remote Telemetry Unit (RTU) package must include:
    - Telog RTU model number RS-33u or equivalent.
    - Latest version CPU module
    - Multi-Channel Recorder (Remote Data Acquisition) Telog Model No. RS-3314; Mixed I/O: 8AI, 6DI
    - Model No. 1 x RTT Cellular Packet Modem. (800 Mhz)
    - Telog M-323S communication interface module.
    - Telog A-PMA Pole Mount Antenna – Omni directional ¼-wavelength dipole antenna with 3 dB gain from CDMA/1xRTT cellular option. Includes 6.6 feet of coax cable and mounting brackets.

- Power Source: Model No. AC12B4, AC to 12 Volt DC battery backup and alarm feature when loss of AC power is detected.
- Battery
- Door entry switch
- Keyed door lock

☐ Human Machine Interface (HMI) requirements to be fulfilled employing MR Systems.

ELECTRICAL

☐ All Electrical Systems to comply with NFPA 70, "National Electric Code", NFPA 820 "Standard for Fire Protection in Wastewater Treatment & Collection Facilities", ANSI, as well as applicable federal, state and local codes.

☐ Include Electrical Legend on plans.

☐ Include Wiring Schedule on plans.

☐ Include the following warning sign in bold on plans:

"Lock out all power while working on any equipment to avoid electrical shock or equipment activation".

☐ Main Power Feed to be above-grade, fused disconnect switch.

☐ Incoming Electrical Service to be equipped with Surge Protection installed in a NEMA-4X enclosure.

☐ Surge Suppressor shall be U.L. listed and labeled under UL 1449 and UL 1283. See Section IV.D.20.a.(5) of the “Potable Water Main, Gravity Sanitary Sewer, and Sanitary Sewer Pumping Station and Force Main Design Standards”.

☐ Single Line Electrical Drawing showing power distribution for the proposed pump station, including pump control panel detail

☐ Pump Station Power Riser Diagram

☐ Electrical Conduits to be 1-1/4 inch minimum. All conduit work shall be galvanized rigid conduit (Red2hot with PVC coating on the inside) or IMC with threaded couplings, and be water-tight and gas-tight.

☐ Electrical Conduits to contain two 10 conductor shielded cables with 8 feet slack in the pump station control panel and 4 feet of slack in the generator and transfer switch panels.

☐ Soft Starters are required for pumps greater than or equal to 20 horsepower rating.

☐ Electrical enclosures, Switching Gears, and Conduits shall be outside the Wet Well area, and protected from vehicular traffic and flooding.

- ☐ Provide for electrical control panels 4'W x 8'H x 24'L awning and trim, 8" to 10" base plates on vertical supports. Four vertical supports front side, four vertical supports back side.

INSTRUMENTATION AND CONTROLS

- ☐ Wastewater levels within wet wells to be detected through the use of submersible pressure level transducer and three (3) mercury sealed type float switches.
- ☐ Pump Station Control & Instrumentation Riser Diagram
- ☐ Phase monitor to be connected to the PLC for monitoring and remote indication of open phase/phase reversal condition.
- ☐ Allen Bradley Micro Logix Programmable Controller to control and monitor all pump station functions.
- ☐ Connect PLC to Motorola MOSCAD CPU via MODBUS protocol.
- ☐ Connect Allen-Bradley HMI to PLC.
- ☐ PLC, Phase Monitor, HMI and Soft Starters to be installed in a single NEMA 4X Stainless Steel enclosure.
- ☐ Refer table in Section IV.D.20.c.(2) of the "Potable Water Main, Gravity Sanitary Sewer, and Sanitary Sewer Pumping Station and Force Main Design Standards" for the Submersible Pump Station I/O List.
- ☐ Electrical Grounding & Bonding Riser Diagram for all components as per National Electrical Code, local codes and ordinances.

LIGHTING

- ☐ Lighting plans to include location, type and power distribution,
- ☐ Outside Lighting Control Schematic.
- ☐ Install two 120 Volt High Pressure Sodium Vapor Security Light on a 20 foot Break Down Pole with automatic eye and pole lowering winch. Pole to be painted architecturally brown and light to turn on automatically at night.

FORCE MAINS

- ☐ Plan view shall show to proper scale. Scale shall not be more than:
    - Plan: 1 inch = 50 feet
    - Profile:Horizontal – 1 inch = 50 feet
    - Vertical – 1 inch = 10 feet
- ☐ Plan view shall show the following:

- ☐ All streets, alleys and easements. They shall be dimensioned at least once and at breaks. Streets shall be identified by name.
- ☐ All abutting lots shall be identified by lot number, tract and subdivision.
- ☐ All topography within and to at least five (5) feet beyond easements and topography affected by construction shall be shown.
- ☐ Location of all above and underground utilities, including storm and sanitary sewers, water lines, dry wells, buried telephone lines, natural gas, power, and cables. Existing utilities shall be shown as dashed lines or faded lines with type, size, and other available information called out.
- ☐ All structures, paving and other topographic features within vicinity, such as trees, shall be shown and identified by name, size and type.
- ☐ Location of proposed force main lines and appurtenances. Pipeline shall be identified by name, size, material, and stations.
- ☐ Location of all existing and proposed easements
- ☐ Location of all existing benchmarks shall be shown and identified by type.
- ☐ Location of all connections to existing sewer lines
- ☐ Show horizontal clearance from buildings, structures, drainage culvert, and water mains.
- ☐ Show tie in points to DCDWM existing system.
- ☐ All sheets shall have a north arrow orienting the plan view.

☐ Profile view shall show the following:

- ☐ Existing utilities which cross the proposed utility. Identify crossing utility by name, pipe size, pipe material, type of utility (use), location (station) and elevation. Location and elevation are to be obtained from "as-built" plans paying particular attention to any differences in datum.
- ☐ All force mains require a profile.

NOTE*: **All existing underground utilities shown on profile are assumed to be shown in approximate location only.***

- ☐ Show existing ground and proposed ground.
- ☐ Show manhole number, station, rim, and invert elevations.
- ☐ All appurtenances such as valves, vaults, fittings and restraints. Identify by name, size, type, station and elevation.

☐ All sheets shall show match lines labeled as such with station and sheet number.

- ☐ Proposed force main lines shall be shown as solid lines with sizes, ground cover, material, and pipe classes called out. For example: 8 inch DIP (FM) – Class 350.
- ☐ Show any lift stations adjoining the gravity sanitary sewer system.
- ☐ Force main shall be constructed of epoxy-lined Ductile Iron Pipe (DIP) from the wet well up to the security fence and then may be constructed of HDPE or DIP.
- ☐ Provide Tracer Tape on HDPE pipes to facilitate accurate locating in the future.
- ☐ Provide Flexible Couplings around valves and pump outlet.
- ☐ Provide Quick Connect for a bypass pump (to be used in case of complete pump station failure).
- ☐ Include calculations to demonstrate that velocity of flow in the force main is a minimum of 3 feet per second and maximum of 7 feet per second.
- ☐ Force mains cannot be installed in lieu of gravity sewers to convey flow downhill to an existing receiving sewer.
- ☐ Provide isolation valve on the force main just beyond the flow meter vault.
- ☐ Show details of receiving gravity sanitary sewer line, and connection of incoming force main. The connection details must include a cross section of the receiving structure as well as pertinent details such as inverts of all pipes, pipe sizes, pipe material, benching, ground elevation, top elevation, notes, etc.

DETAIL SHEETS

- ☐ Include DeKalb County Department of Watershed Management "Potable Water, Gravity Sanitary Sewer, and Sanitary Sewer Pumping Station and Force Main Design Standards" Standard Details to be used on the project.
- ☐ Include any other details specific to the project that are not covered by DeKalb County Department of Watershed Management "Potable Water, Gravity Sanitary Sewer, and Sanitary Sewer Pumping Station and Force Main Design Standards" Standard Details.
- ☐ Detail sheets shall be located at the end of the plan set and referenced where used.

ODOR CONTROL

- ☐ Odor Control equipment details, specifications, and shop drawings.
- ☐ Wet well 4 inch vent to atmosphere to include an insect screen.
- ☐ Fall of wastewater from the inlet sewer to the wet well shall be limited to a maximum of 6 inches. Therefore, provide an outside drop to meet this requirement.

☐ Odor control is required for pump stations constructed within forty feet of a residence.

SITE DESIGN

☐ Pump Station Buffer Zone to be a minimum of 120 feet x120 feet with the 45 feet x 43 feet pad at the center.

☐ Provide a 20 foot easement for force mains.

☐ Subgrade for pad, turnaround & access road, side slopes and any other features within the fence line must be compacted to a minimum of 95% Standard Proctor Compaction.

☐ Access Road and Turnaround to be constructed of Portland Cement Concrete on a six-inch layer of compacted aggregate base course.

☐ Pumping Station Pad to be a minimum of 6-inch thick (on a compacted subgrade & minimum 6 inch aggregate base course) 45x43 foot reinforced concrete pad (45x43 foot fenced area) with at least 0.5% slope away from the center point. Provide curbing or footing around the pad to prevent runoff from eroding the underside of pad.

☐ Provide fences 8 foot high with number 4 chain link wire fabric with top rails, bottom tension wires and 3 strands of barbed wire at the top on angled extension arms.

☐ Provide 20 foot wide (minimum) gate on 6-inch diameter posts plus a 4 foot wide walk through gate.

☐ Side Slopes steeper than 3H:lV to be protected with riprap.

☐ Minimum access road width to be 20 feet.

☐ Minimum turnaround radius to be 45 feet.

☐ Pump Station to be at least 2 feet above and 25 feet horizontally away from the 100 year flood line as determined by the most recent FEMA Flood Insurance Rate Map, or as established by acceptable modeling techniques.

CONTRACTOR NOTES (TO BE SHOWN ON PLANS)

☐ Contractor to ensure that Power Company notifies DCDWM or Snapfinger Advanced Wastewater Treatment Facility about the availability of 3-Phase Power and Voltage to the site. See Section IV.D.20.a.6 of the “Potable Water Main, Gravity Sanitary Sewer, and Sanitary Sewer Pumping Station and Force Main Design Standards”.

☐ Demonstrate pumps will not cavitate, freewheeling (operate at pump run-out), or deadheading (operate at pump shut-off). This type of operation shall not be allowed.

☐ Demonstrate minimum time between pump starts is ten minutes.

- ☐ Provide four sets of Operation & Maintenance Manuals to DeKalb County for the Generator and Automatic Transfer Switch.
- ☐ Demonstrate Generator is load tested at 100% full load on site for a period of four (4) hours
- ☐ Demonstrate generators are capable of shutting down and activating the audible/visual alarms and telemetry if a damaging operating condition develops.
- ☐ Provide Standby Generator (Cummins/Onan only) specifications and shop drawings,
- ☐ Provide Automatic Transfer Switch specifications and shop drawings.
- ☐ Provide a 60-month (from date of commissioning) comprehensive warranty.
- ☐ Provide Telemetry equipment details, specifications, and shop drawings.
- ☐ Demonstrate Low-Level Alarm, Pumps-Off, Lead Pump-On, Lead Pump-Off & High Level Alarm settings are functional.
- ☐ The Contractor shall install and provide all equipment as well as conduct tests in accordance with "DeKalb County Potable Water, Gravity Sanitary Sewer and Sanitary Sewer Pump Station Standards".
- ☐ No underground fuel storage tanks will be permitted.
- ☐ Contractor to install Safety Placards & Warning Signs on all equipment as per OSHA standards.
- ☐ Contractor/Developer is responsible for complete wiring and programming of the PLC & RTU.
- ☐ Contractor to put in "Best Faith Effort" to obtain 480 Volts, 3 Phase Power at the pumping station.

Electrical Conduit and Accessories Specifications for the Dekalb County Wastewater Treatment and Collection System

All outdoor electrical conduits and supporting accessories for new installations at the Snapfinger plant, Polebridge plant and lift stations shall be of type PVC Coated REDH2OT supplied by Plasti-bond. This requirement applies to all outdoor, exposed and buried types of installations as well as any installation indoor or outdoor where the air is determined to be corrosive.

Equivalent substitution and/or exceptions due to conformance criteria, performance, availability or other considerations must be individually itemized and approved by the responsible party from the Watershed Management's wastewater treatment plants.

All compounds used in conjunction with Plasti-bond conduits and accessories must be of the type specified or recommended by Plasti-bond for use with their products.

The following is a partial list of available Plasti-Bond REDH2OT products:

Product	Plasti-Bond REDH2OT Item	Description
Rigid Conduit	Plasti-Bond Coated Galvanized Rigid Conduit	PVC coated rigid metal conduit with red urethane interior coating protects conductors from mechanical damage and corrosive attack. Electrical continuity is maintained across assembled joints.
Nipple	Plasti-Bond Coated Nipples	Factory threaded nipples save you time and money in the field. Electrical continuity is maintained across assembled joints. *The exteriors of certain short nipples are coated with urethane in lieu of PVC. This is dictated by the manufacturing process as well as assembly considerations.
Pipe Strap Support	Plasti-Bond Coated Pipe Straps	Plasti-Bond PVC coated pipe straps are used to securely mount conduit to a wall or other structure for support. They are available in two styles: a one-hole malleable iron strap or a two-hole stamped steel strap. Mounting hardware not provided.
Clamp Hanger Support	Plasti-Bond Coated Clamp Hangers	Plasti-Bond PVC coated conduit clamp hangers are used with threaded rod to securely suspend conduit runs supported from above. They are provided with stainless steel hardware.

Thread Rod Support	Plasti-Bond Coated Thread Rods	Plasti-Bond PVC coated all thread rod is used with coated conduit hangers and coated strut to securely suspend conduit runs supported from above. It is provided in 3/8" and 1/2" sizes and three standard lengths, 3', 6' and 10'.
Elbow	Plasti-Bond Coated Elbows	Factory bent standard radius elbows are available and ready to ship. Factory bent elbows are more accurate, quicker to install and more economical, because they save field bending time and do not waste materials. Electrical continuity is maintained across assembled joints.
Pulling Elbow	Plasti-Bond Coated Pulling Elbows	Plasti-Bond pulling elbows are used at 90 degree bends in conduit runs to allow straight pulls at bends, to serve as pull outlets for stiff conductors, to allow for service entrance into buildings or to allow conductor entrance into motors. Electrical continuity of the conduit system is maintained across assembled joints.
Conduit Thread and Coupling	Plasti-Bond Coated Conduit Thread and Coupling	PVC coated rigid metal conduit couplings with red urethane interior coating connect coated conduit sections. Electrical continuity is maintained across assembled joints. PVC sleeves on couplings seal off on conduit PVC coating when assembled to prevent corrosive liquids and vapors from attacking threaded joints.
Strut Support	Plasti-Bond Coated Struts	Plasti-Bond PVC coated strut is a versatile system of structural elements that can be used to build supports for a variety of applications. When combined with coated conduit hangers and other accessories, coated strut is a versatile and economical way to provide reliable support for conduit runs and other electrical and mechanical installations.
Pipe Strut Strap Support	Plasti-Bond Coated Pipe Strut Straps	Plasti-Bond PVC coated pipe straps are used with coated strut to support conduit installations in a variety of configurations. B2008 style straps may be used in either vertical or

		horizontal positions to support conduit. Straps provided with stainless steel hardware. Conduit spacing may be as close together as allowed by the couplings. B3690 style straps may be used with hanger rods or other means of support to securely fasten conduit runs.
Conduit Body	Plasti-Bond Coated Form 8 & Form 7 Conduit Bodies For General Service	Plasti-Bond conduit bodies with covers are offered in Form 8 and Form 7 styles, each with numerous configurations to provide a complete coated conduit system. May be used to make 90degree bends, for pull outlets, to provide for taps or splices, to act as a mounting outlet for wiring devices or lighting fixtures etc. Electrical continuity of the conduit system is maintained across assembled joints.
Mogul Conduit Body	Plasti-Bond Coated Mogul Style Conduit Bodies	Plasti-Bond mogul style conduit bodies are offered in numerous configurations to provide a complete coated conduit system. Mogul BG Covers are sold separately. Mogul style fitting bodies have long openings and may be used to make bends in conduit runs, for pull outlets for stiff conductors, to provide additional room for taps or splices, etc. Electrical continuity of the conduit system is maintained across assembled joints.
Device Boxes	Plasti-Bond Coated Cast Device Boxes and Covers	Plasti-Bond device boxes and covers are available in several configurations and may be used in coated conduit systems to accommodate wiring devices, to serve as pull boxes for conductors, or to allow for splices and taps in conductors. Covers are available separately. Electrical continuity of the conduit system is maintained across assembled joints.
GUA Conduit Box	Plasti-Bond Coated GUA Conduit Boxes- Hazardous Location	Plasti-Bond GUA series conduit outlet boxes are installed in hazardous location conduit systems to serve as pull and splice boxes, to change the direction of a conduit run, to connect runs of conduit, or to

		provide access to conductors. They are provided with covers as standard. Inquire about special covers to allow use to mount lighting fixtures or as sealing fittings. Electrical continuity of the conduit system is maintained across assembled joints.
Sealing Fitting	Plasti-Bond Coated Sealing Fittings	Plasti-Bond Sealing Fittings are used in conduit runs to stop gasses, vapors or flames from migrating from one part of the conduit system to another. This limits the spread of any potential explosion, enhancing safety. The PVC and urethane coatings of the fittings protect them from corrosive atmospheres so they can continue to function in hazardous locations. These fittings are available in several different configurations and with optional breathers and drains to accommodate installation in a variety of locations and positions. The EY, EYM, EYD and EYDEF styles of fittings are for installation in vertical conduit runs. The EYA, EYAM and EYSEF style fittings are for installation in either vertical or horizontal runs. The EZS and EZDM style fittings may be used in any angle of conduit run. These Plasti-Bond sealing fittings should be used with a suitable system of sealing compound, such as Chico A, Chico X or Chico A-P from Crouse-Hinds. Follow the installation instructions included with the sealing compound.
Knockout Hub	Plasti-Bond Knockout Hubs ST Style	Plasti-Bond ST style knockout hubs are used to terminate conduit runs through the wall of a sheet metal electrical enclosure. They are available with or without grounding lug. STTB style hubs are ÒThrough-BulkheadÓ fittings used to pass conduit runs through firewalls or bulkheads up to 1/8" thick. STTTB style hubs perform the same function for unlimited wall thicknesses, (furnished without nipples).
Conduit Outlet Box	Plasti-Bond Coated OE Series Conduit Outlet Boxes	Plasti-Bond OE Series Conduit Outlet Boxes are installed in hazardous location conduit systems to serve as

		pulling and splicing fittings, to connect runs of conduit, to change the direction of a conduit run, or to provide access to conductors. They are provided with covers. Electrical continuity of the conduit system is maintained across assembled joints.
Conduit Unions	Plasti-Bond Coated Conduit UNF & UNY Unions	Plasti-Bond UNF unions are used to connect conduit to conduit or to allow for future changes to the conduit system. Female threads are provided at each end. Plasti-Bond UNY unions are used to connect conduit to a conduit fitting, junction box, or device enclosure. One end is a male thread and the other is female.
L Elbow	Plasti-Bond Coated EL Style Malleable Elbows	Plasti-Bond EL style malleable elbows are used in a conduit run to change direction 90degree or to terminate at a fitting or box. They are available with male threads only, female threads only, or male and female threads.
Service Entrance Elbow	Plasti-Bond Coated LBY Service Entrance Elbows	Plasti-Bond LBY type elbows are used as service entrance elbows between service entrance and vertical weatherhead conduit runs, to change direction of a conduit run 90degree when space is limited, and for pull outlets. They are available for general service (Series LBY-50-GS through LBY-150-GS) and hazardous (Series LBY-50 through LBY-55) locations.
Expansion Joint	Plasti-Bond XJG Conduit Expansion Joints	Plasti-Bond XJG type expansion joints are used to connect two lengths of conduit subject to longitudinal movement, including that caused in long runs by thermal expansion and contraction.
Liquid Tight Connector	Plasti-Bond Liquid Tight Connectors	Plasti-Bond liquid tight connectors are used with liquid tight conduit to wire motors, transformers, processing equipment, pumps, etc. The flexible conduit and the PVC coated connector work together to
Reducing Coupling	Plasti-Bond Coated Reducing Couplings	Plasti-Bond reducing couplings are used to connect two pieces of conduit of different size. They are available in 17 different size combinations.

Plug & Bushing	Plasti-Bond Plugs and Bushings	GLL Grounding Bushings GLL style PVC coated threaded grounding bushings have an aluminum lug for copper or aluminum grounding conductors. RE Reducers RE style reducers reduce conduit hubs to a smaller size. They are provided with an integral bushing to prevent conductor damage and full, clean cut threads for ease of assembly. All RE reducers are coated inside and out with polyurethane for corrosion protection. PLG Plugs PLG style plugs are used to close unused conduit hubs. They are available with either recessed square drive sockets or raised square drive heads. All PLG plugs are completely coated with polyurethane for corrosion protection.
Strut Nut Support	Plasti-Bond Coated Strut Nut Supports	Plasti-Bond PVC coated strut nuts are used to assemble strut components and to secure coated all thread rod in a section of strut. These are available with or without a spring to aid in placement and assembly.
Beam Clamp	Plasti-Bond Coated Beam Clamps	Plasti-Bond PVC coated beam clamps are used to securely support conduit runs by attaching them to beams, angles, trusses and other structural members. They are available in four different styles: Right Angle: to attach the conduit run at a 90degree angle to a beam or structural member. Parallel: to attach the conduit run parallel to a beam or structural member. Edge: to attach the conduit run at a 90degree angle to a thin beam or structural member. Hanger Rod Beam Clamp: to attach a single all thread rod to a beam or structural member.

APPENDIX L

SANITARY SEWER PUMPING STATION AND FORCE MAIN STANDARD: FORMS

DEKALB COUNTY DEPARTMENT OF WATERSHED MANAGEMENT
PUMP STATION CONCEPTUAL REVIEW AND APPROVAL FORM

Project Data

Name of Project: _____

Name of Developer/Contractor: _____ Company: _____

Name of Georgia Professional Engineer: _____ Company: _____

Proposed Project Location: _____ Land Lot:_____ District: ____

Site Data

Area of Site: _____ acres Area of Drainage Basin: _____ acres

Existing land use: _____

Proposed land use: _____

Number of Units or Building Area: _____

Estimated Wastewater Flow: _____ ADF gpd _____ Peak gpd

Additional Information

Is existing site within 100-year FEMA floodplain? _____

Is existing site already developed? _____

Is the offsite area within the drainage basin already developed? _____

Distance to nearest gravity sanitary sewer: _____ feet

Location of Proposed Connection to Existing Sanitary Sewer: _____

Reason proposed site requires a pump station facility: _____

Required Attachments

1. Proposed site located on a USGS Quadrangle map, with the proposed pump station location shown. The map shall show the limits of the proposed development and of the sub-basin that drains to the pump station.

2. Location of proposed connection to receiving sanitary sewer.

3. Projection of wastewater flows generated by the proposed development.

4. Projection of wastewater flows generated in the remainder of the sub-basin.

DEKALB COUNTY DEPARTMENT OF WATERSHED MANAGEMENT
PUMP STATION DESIGN REVIEW AND APPROVAL FORM

Project Data

Name of Project: _____

Name of Developer/Contractor: _____ Company: _____

Name of Georgia Professional Engineer: _____ Company: _____

Proposed Project Location: _____ Land Lot:_____ District: ____

Design Data

Pump Manufacturer: _____

Pump Model: _____

Pump Impeller Diameter: _____

Pump Horsepower: _____

Pump Capacity Available for Future Development: _____

Pump Suction Opening Diameter (4” minimum): _____

Pump Discharge Opening Diameter (4” minimum): _____

Generator Type: _____

Generator Manufacturer: _____

Generator Load Rating: _____

Telemetry Equipment Manufacturer: _____

Required Attachments

1.	Location map depicting property and land lot lines, buildings, and roads.
2.	Pump curve and system head curve.
3.	Pump details, specifications, and shop drawings, including wet well elevations.
4.	Valve details, specifications, and shop drawings.
5.	Flow meter details, specifications, and shop drawings.
6.	Generator details, specifications, and shop drawings, along with automatic transfer switch specifications and shop drawings.
7.	Telemetry equipment details, specifications, and shop drawings.
8.	Single line electrical drawing showing power distribution for the proposed pump station.
9.	Force main design showing size, material, plan, profile, and valve locations.
10.	Depiction of receiving gravity sanitary sewer system and connection to proposed pump station force main.

DEKALB COUNTY DEPARTMENT OF WATERSHED MANAGEMENT
PUMP STATION DESIGN CALCULATIONS FORM

Project Data

Name of Project: _____

Name of Developer/Contractor: _____ Company: _____

Name of Georgia Professional Engineer: _____ Company: _____

Proposed Project Location: _____ Land Lot: _____ District: ____

Design Flow

Proposed Average Daily Flow = _____ gpm

Offsite Average Daily Flow = _____ gpm

Total Average Daily Flow = _____ gpm

Peaking Factor = _____ gpm

Total Peak Flow = _____ gpm

System Head Curve

Static Head Loss = _____ feet

Individual Pump Flow Rate = _____ gpm

Force Main Diameter (4” minimum) = _____ inches

Effective Force Main Length = _____ feet

Friction Head Loss, New Condition (C = 130) = _____ feet

Friction Head Loss, Aged Condition (C = 100) = _____ feet

Total Dynamic Head, New Condition (C = 130) = _____ feet

Total Dynamic Head, Aged Condition (C=100) = _____ feet

Force Main Velocity = _____ feet / second
(2.0 ft/s minimum, 5.0 ft/s maximum)

Wet Well

Wet Well Diameter (6' minimum) = _____ feet

Wet Well Depth = _____ feet

Pump Cycle Time (10 minute minimum) = _____ minutes

Active Storage Volume = _____ gallons

Top of Wet Well Elevation = _____ feet

High Level Alarm Elevation = _____ feet

Lag Pump On Elevation = _____ feet

Lead Pump On Elevation = _____ feet

Pumps Off Elevation = _____ feet

Low Level Alarm Elevation = _____feet

Force Main Invert = _____ feet

Elevation at which Spill will Occur = _____ feet

Location of Initial Spill: _____

DEKALB COUNTY DEPARTMENT OF WATERSHED MANAGEMENT
PUMP STATION START-UP CHECKLIST

Project Data

Pump Station Name: _____Requested Start-up Date_____

Name of Developer/Contractor: _____ Company: _____

Phone: _____Fax:_____E-mail: _____

Proposed Project Location: _____ Land Lot:_____ District: ____

Check List

_____ A Force Main Test must be completed and accepted.

_____ A pump draw down test must be completed and accepted.

_____ A certified letter of compaction from a licensed Geotechnical Engineer must be completed and accepted.

_____ The General Contractor/Developer, Electrical Contractor, and Pump Manufacturer personnel must be scheduled to be on site at Start-up.

_____ All utilities (i.e. - electric, water, telephone and gas, if applicable) must be installed and working at Start-up.

_____ Submersible pumps will need to be pulled out of the wet well at Start-up. (The General Contractor is responsible for this.)

_____ Pumps must be able to run off of the main power source, as well as off of the generator.

_____ All spare parts, O & M Manuals, and applicable paperwork should be brought to Start-up. (i.e. - 4-Hour load bank test, letter of compaction, utility names and account numbers, etc.)

THESE ITEMS MUST BE COMPLETE PRIOR TO SCHEDULING A START-UP.

DEKALB COUNTY DEPARTMENT OF WATERSHED MANAGEMENT
PUMP STATION START-UP CHECKLIST

When this check off list is complete, it will need to be faxed to the Snapfinger Plant.
Fax: (770) 593-5866 Plant Superintendent Phone: (770) 808-2900

The desired Start-up date should be listed along with a contact name and phone number. If all the items are complete, you will be contacted with a Start-up date and time. Note: If any items that are checked are not complete upon arrival, the Pump Station Start-up will need to be rescheduled and a fee could be assessed for additional trips.

Signature:_____ Date:_____

1580 Roadhaven Dr., Stone Mountain, GA 30083
DEKALB COUNTY WATERSHED MANAGEMENT

APPENDIX M

SANITARY SEWER PUMPING STATION AND FORCE MAIN STANDARD: DETAILS

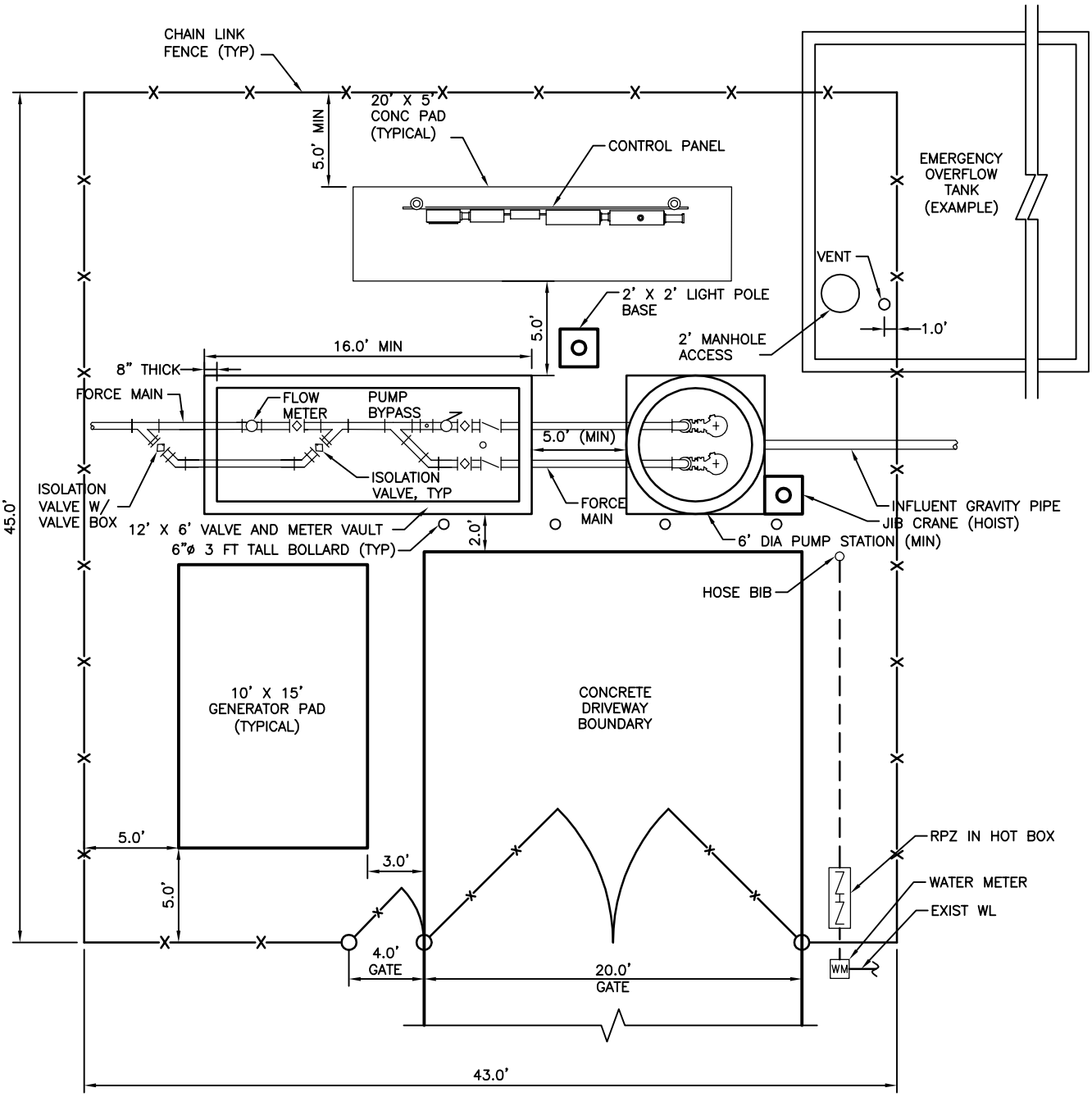

NOTES:

1. DETAIL IS EXAMPLE SITE PLAN. SIZES ARE RELATIVE AND BASED ON MINIMUM CRITERIA. LARGER WET WELLS, VALVE VAULTS, ETC, MAY BE REQUIRED BASED ON SITE SPECIFIC CONDITIONS.
2. PUMPING STATION PAD AND DRIVEWAY SHALL INCLUDE EXPANSION JOINTS AS NEEDED.
3. PUMPING STATION PAD, OVERFLOW VAULT TOP SLAB, AND DRIVEWAY REINFORCEMENT SHALL BE DESIGNED TO WITHSTAND 80,000 LB LOAD.
4. ELECTRICAL AND CONTROL PANELS SHALL BE PROVIDED WITH A 4 FT WIDE, 8 FT HIGH CANOPY. LENGTH OF CANOPY IS DETERMINED BY THE TOTAL COMBINED LENGTH OF ELECTRICAL AND CONTROL PANELS.

DEKALB COUNTY, GA. Department of Watershed Management	**STANDARD DETAILS**	08/08
	PUMPING STATION SITE PLAN (TYPICAL/EXAMPLE) NOT TO SCALE	DETAIL NO. P-001

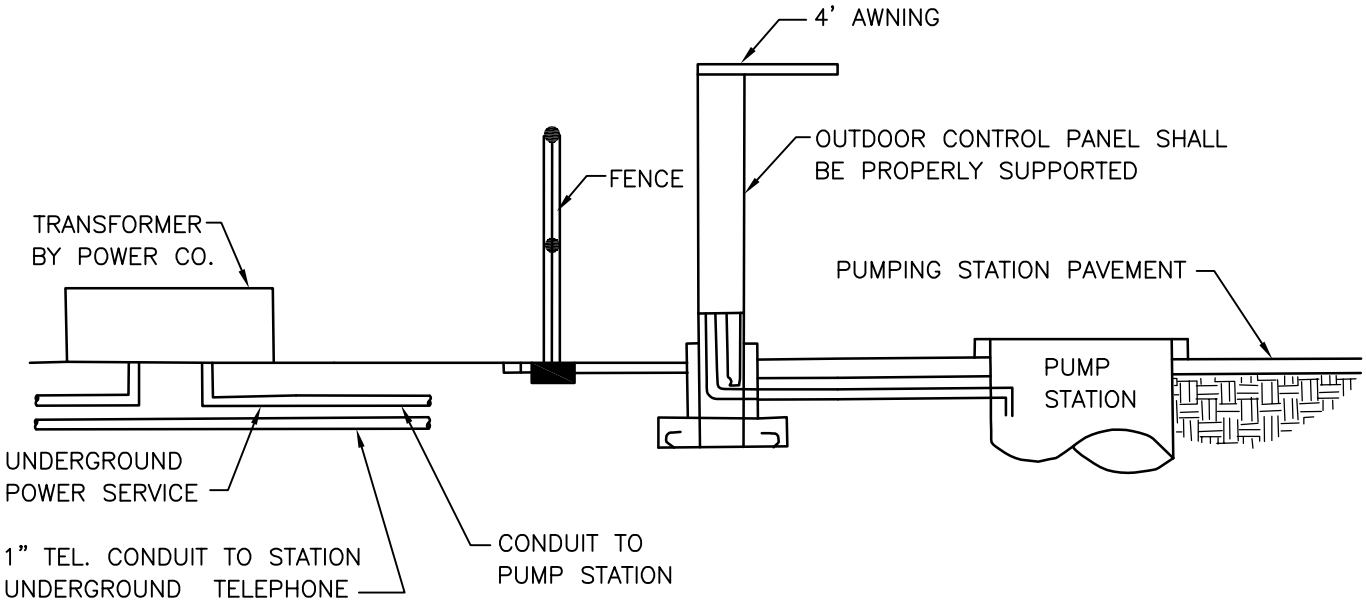

NOTES:

1. METER AND DISCONNECT SHALL BE PLACED ON ELECTRICAL/CONTROL PANEL SUPPORT. (MAIN BREAKER IS SHOWN ON P–023 AND P–025.)

DEKALB COUNTY, GA. Department of Watershed Management	**STANDARD DETAILS**	08/08
	Pumping Station Underground Power Detail	WATER Matters
	NOT TO SCALE	DETAIL NO. P-002

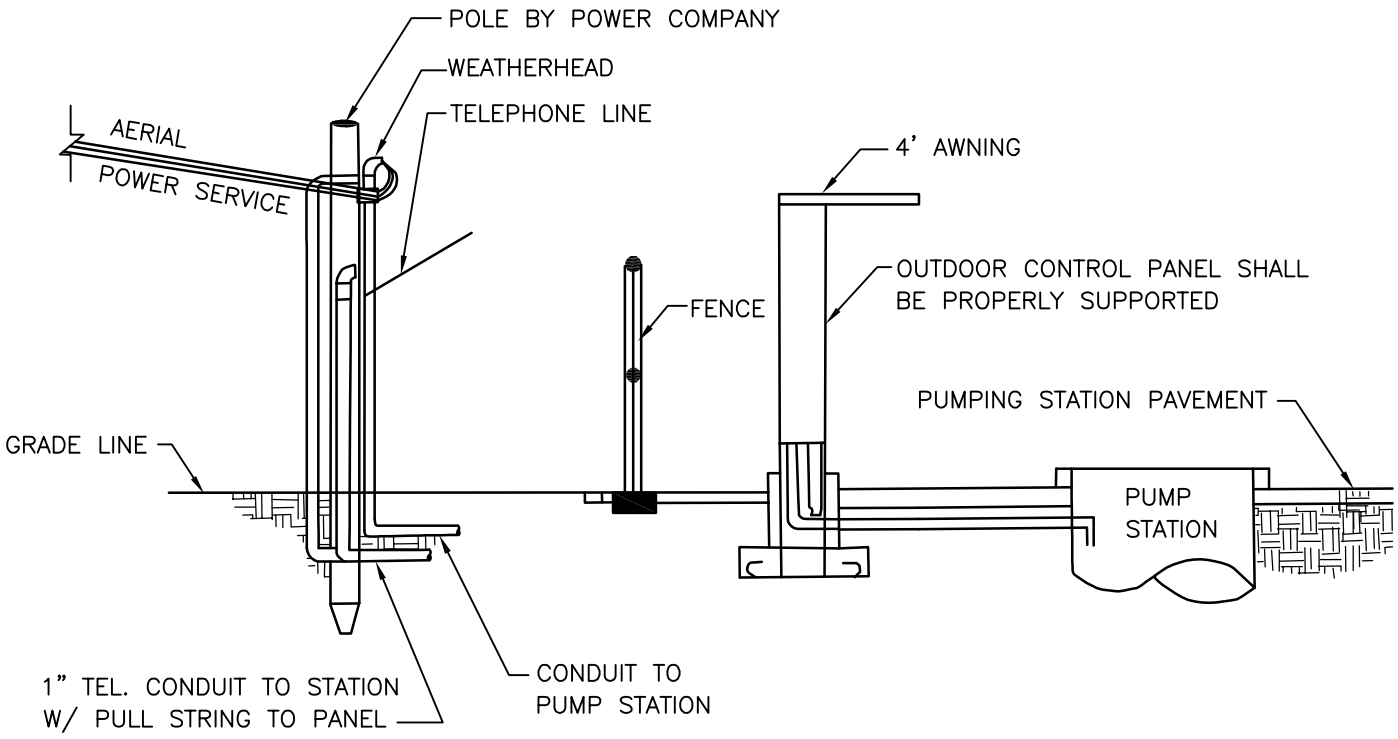

NOTES:

1. METER AND DISCONNECT SHALL BE PLACED ON ELECTRICAL/CONTROL PANEL SUPPORT. (MAIN BREAKER IS SHOWN ON P-023 AND P-025.)

2. DISCONNECT SWITCH MUST BE LOCKABLE IN EACH POSITION.

DEKALB COUNTY, GA. Department of Watershed Management	**STANDARD DETAILS**	08/08
	Pumping Station Overhead Power Detail	
	NOT TO SCALE	DETAIL NO. P-003

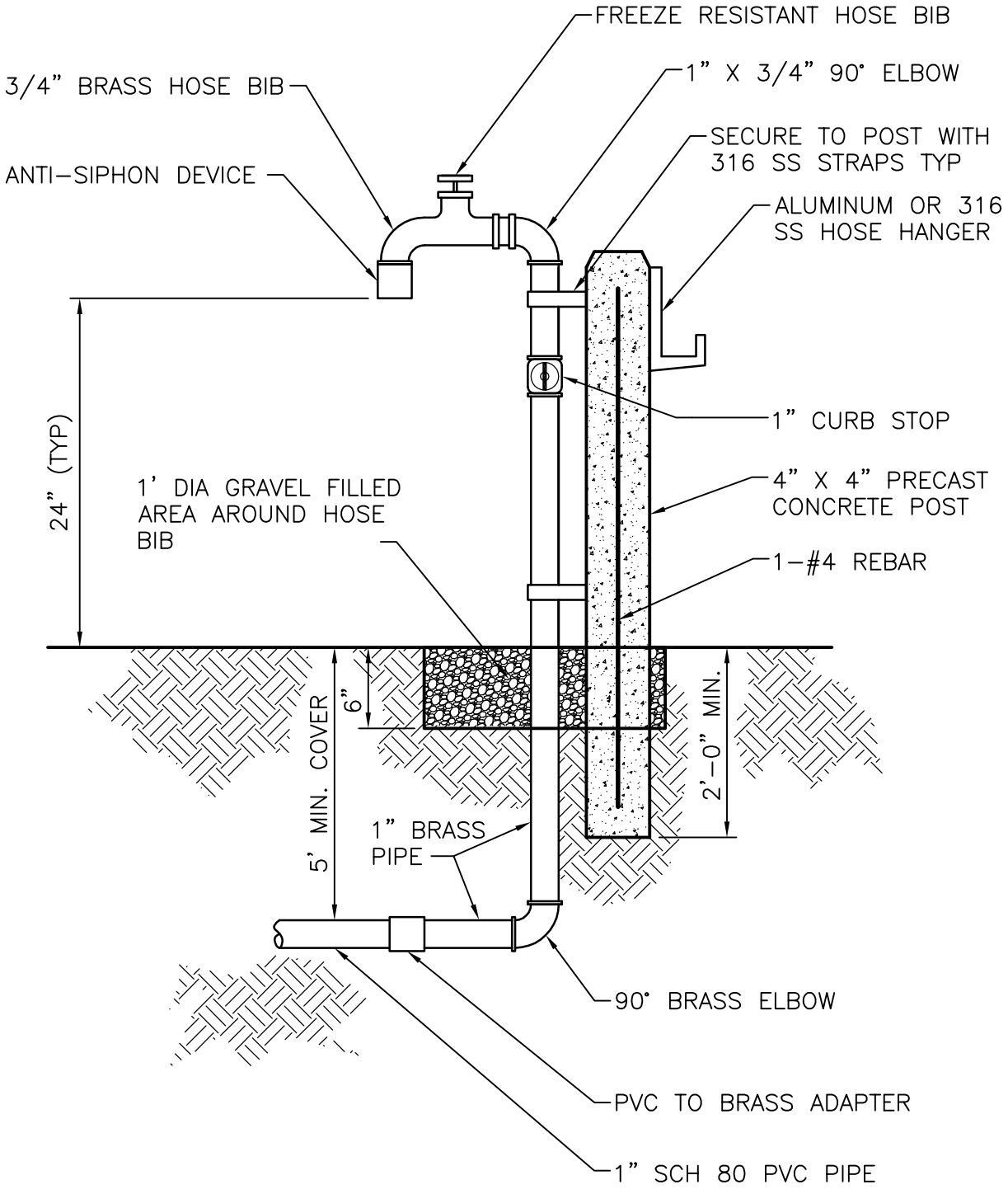

DEKALB COUNTY, GA.
Department of Watershed Management

STANDARD DETAILS

Hose Bib
Service Connection Detail

NOT TO SCALE

08/08

DETAIL NO. P-004

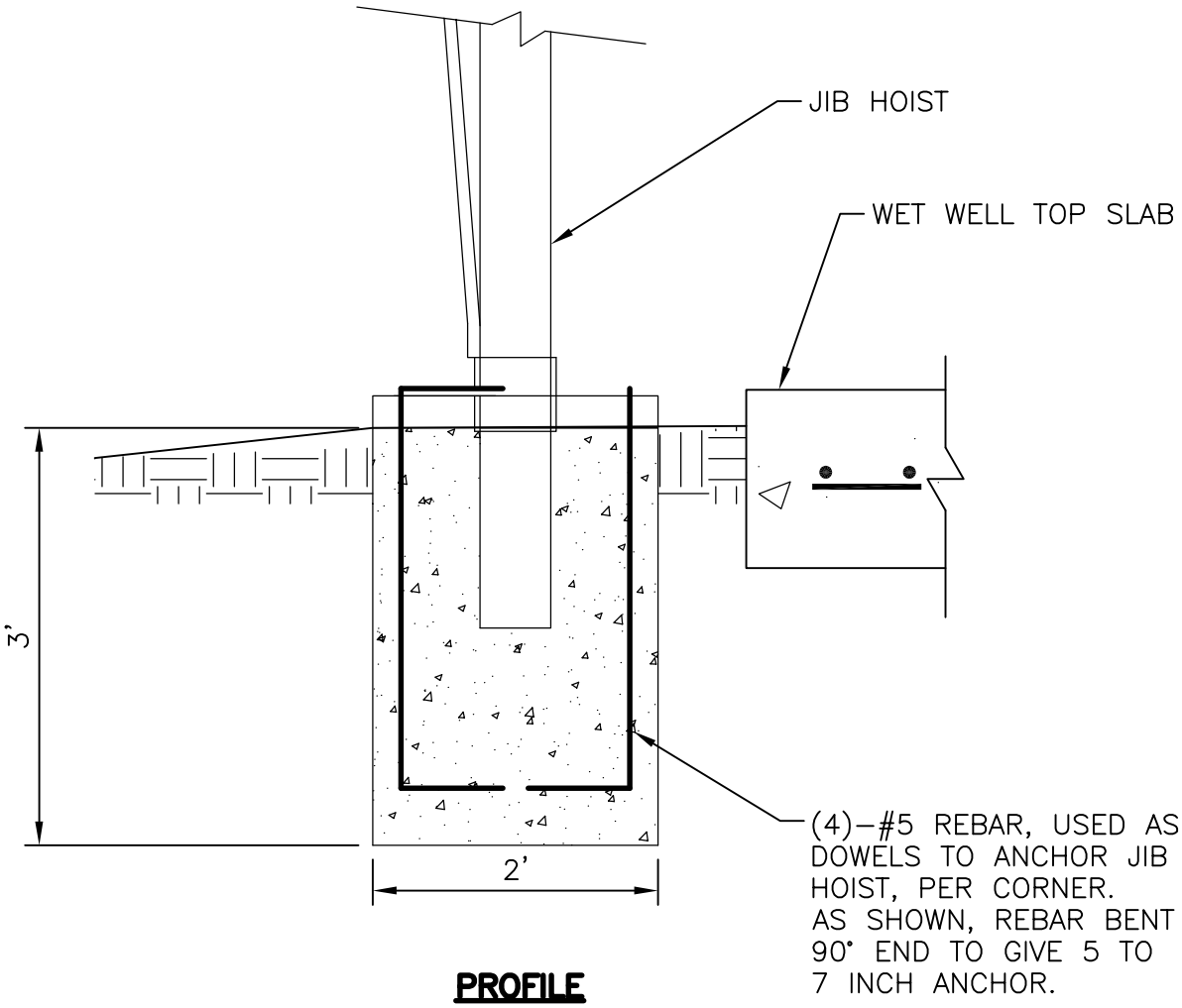

PROFILE

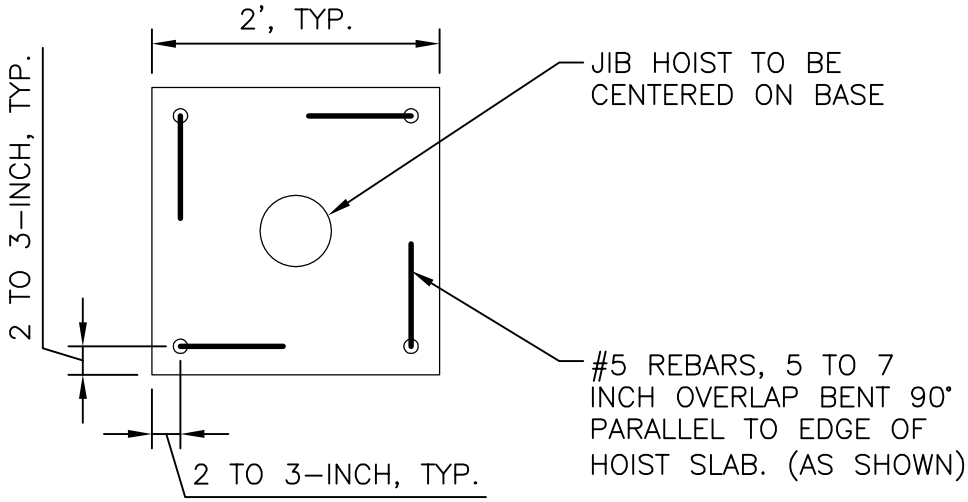

PLAN

DEKALB COUNTY, GA. Department of Watershed Management	**STANDARD DETAILS**	08/08
	Jib Crane (Hoist) Base	
	NOT TO SCALE	DETAIL NO. P-005

NOTE:

EXTERIOR HINGED LIGHT POLE WITH 150 WATT HIGH PRESSURE SODIUM LUMINAIRE, 120 VOLT BALLAST, PHOTOELECTRIC CONTROL, WITH HEAT AND IMPACT RESISTANT LENS. POLE IS TO BE ARCHITECTURAL BROWN AND IS TO BE SUPPLIED WITH LOWERING WENCH.

LUMINAIRE – GE PART = M2RR–15S1A2L–MN4
BRACKET – GE PART = R8SU2H6PP
POLE – GE PART = ASHTS202T–5.3–11PP

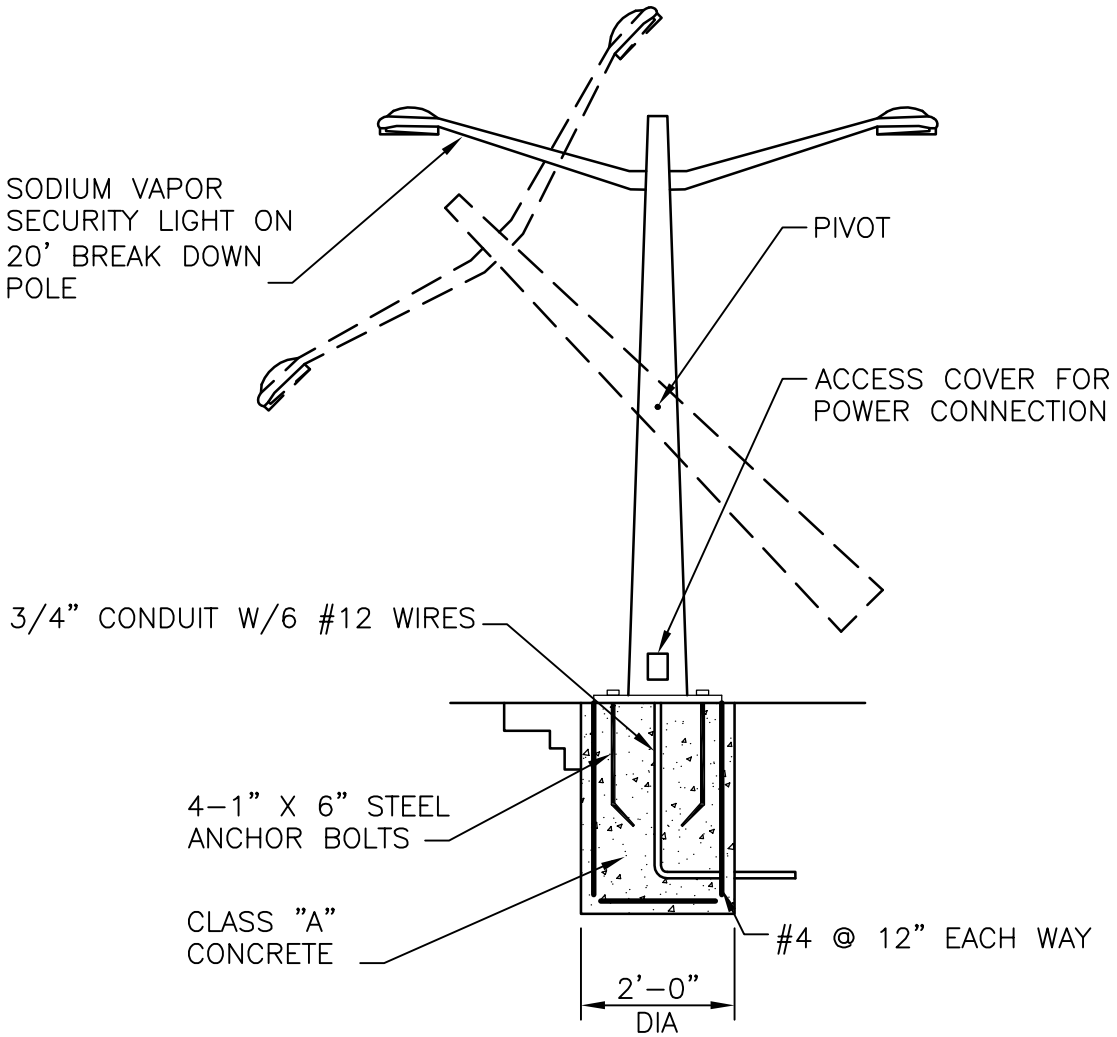

DEKALB COUNTY, GA. Department of Watershed Management	**STANDARD DETAILS**	08-08
	Pumping Station Light Pole Detail	
	NOT TO SCALE	DETAIL NO. P-006

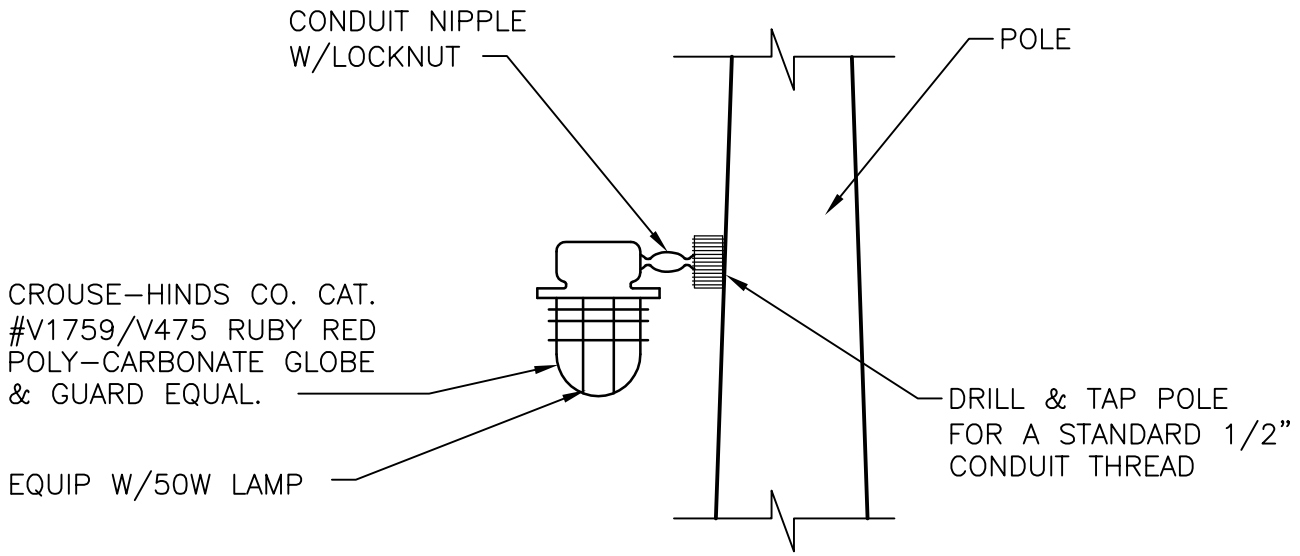

DEKALB COUNTY, GA. Department of Watershed Management	**STANDARD DETAILS**	08-08
	Pumping Station High Water Alarm Light Mounting Detail NOT TO SCALE	DETAIL NO. P-007

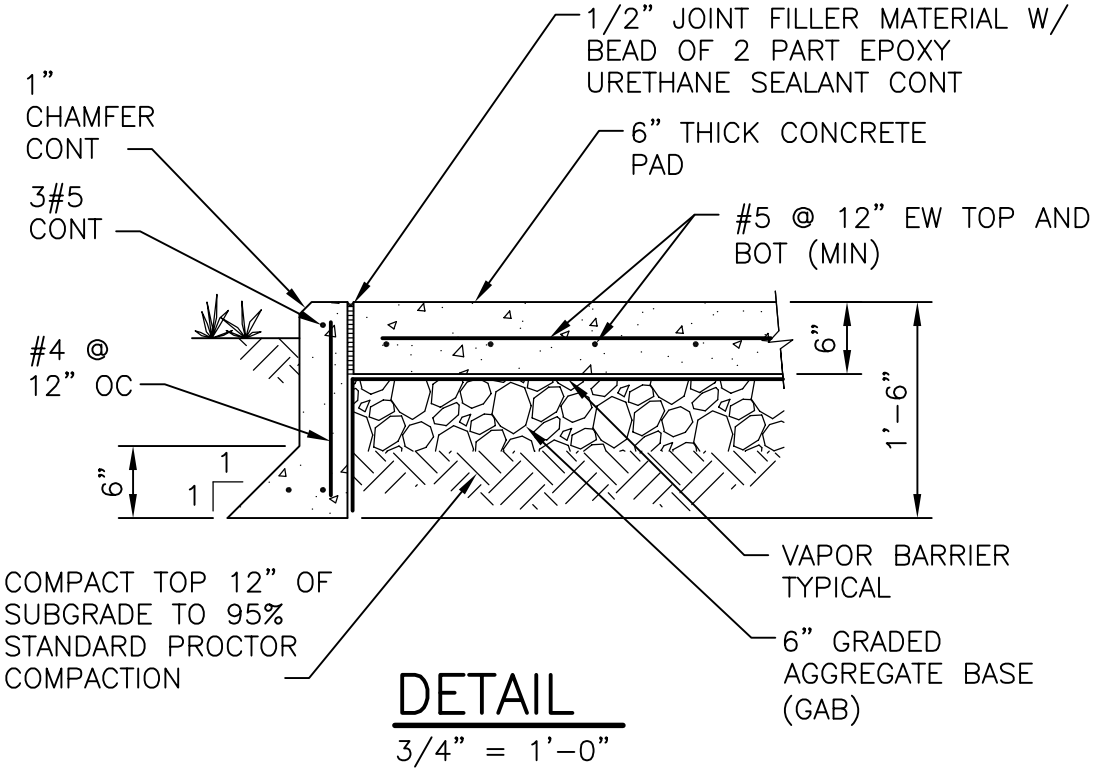

DETAIL

3/4" = 1'-0"

NOTES:

1. PUMPING STATION CONCRETE PAD TO BE A MINIMUM OF 6 INCHES THICK ON A COMPACTED SUB-GRADE AND A MINIMUM 6 INCH AGGREGATE BASE COURSE COMPACTED TO 95% STANDARD PROCTOR COMPACTION.

2. PROVIDE CURBING, AS SHOWN, AROUND THE PAD TO PREVENT RUNOFF FROM ERODING THE UNDERSIDE OF THE PAD.

3. PUMPING STATION PAD AND DRIVEWAY SHALL INCLUDE EXPANSION JOINTS AS NEEDED.

4. PUMPING STATION PAD AND DRIVEWAY REINFORCEMENT SHALL BE DESIGNED TO WITHSTAND 80,000 LB LOAD.

DEKALB COUNTY, GA. Department of Watershed Management	**STANDARD DETAILS**	08/08
	Pumping Station Slab And Curb Detail	
	3/4" = 1'-0"	DETAIL NO. P-008

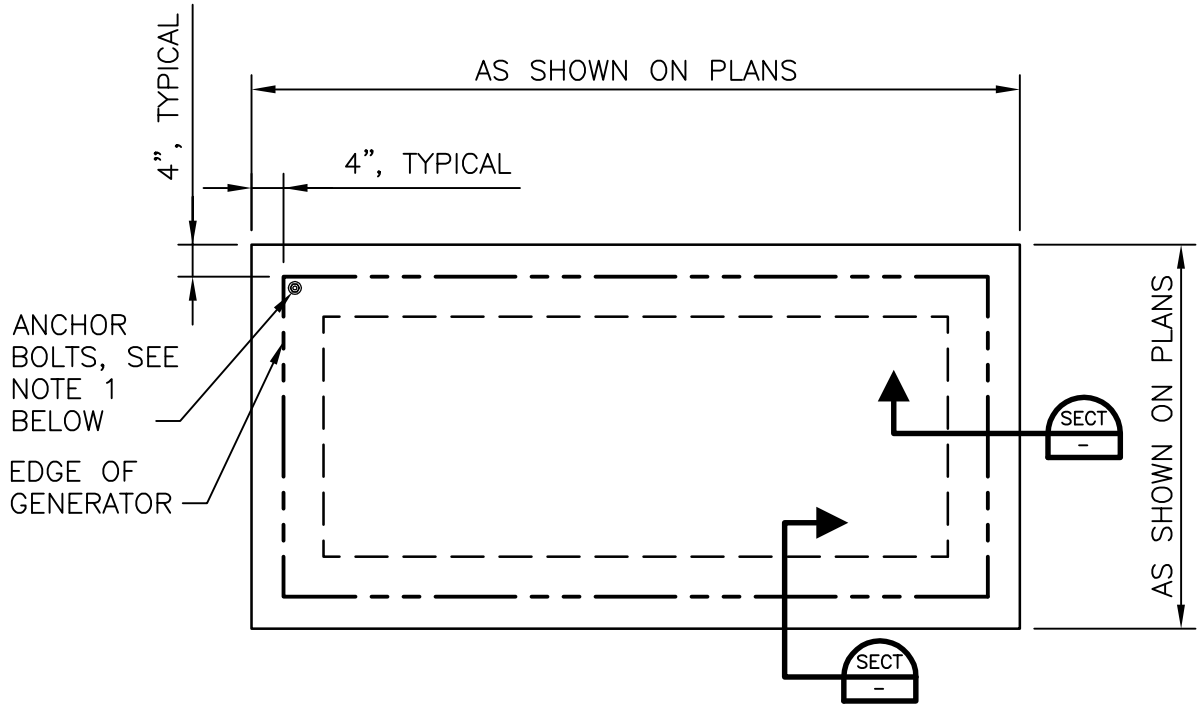

NOTES:

1. VERIFY QUANTITY, TYPE, DIAMETER AND LENGTH OF ANCHOR BOLTS REQUIRED BY MANUFACTURER PRIOR TO ORDERING AND/OR EMBEDDING FASTENERS IN CONCRETE SLAB.

PLAN

1/2" = 1'-0"

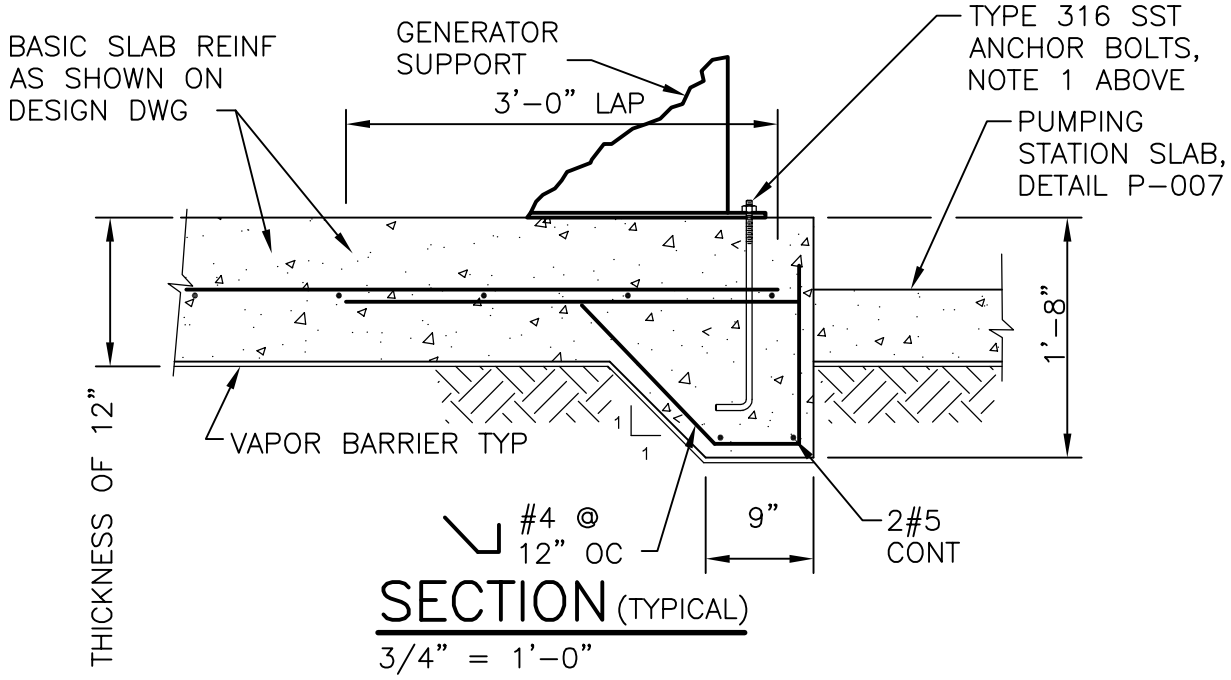

SECTION (TYPICAL)

3/4" = 1'-0"

DEKALB COUNTY, GA. Department of Watershed Management	**STANDARD DETAILS**	08/08
	Generator Pad Detail	
	AS NOTED	DETAIL NO. P-009

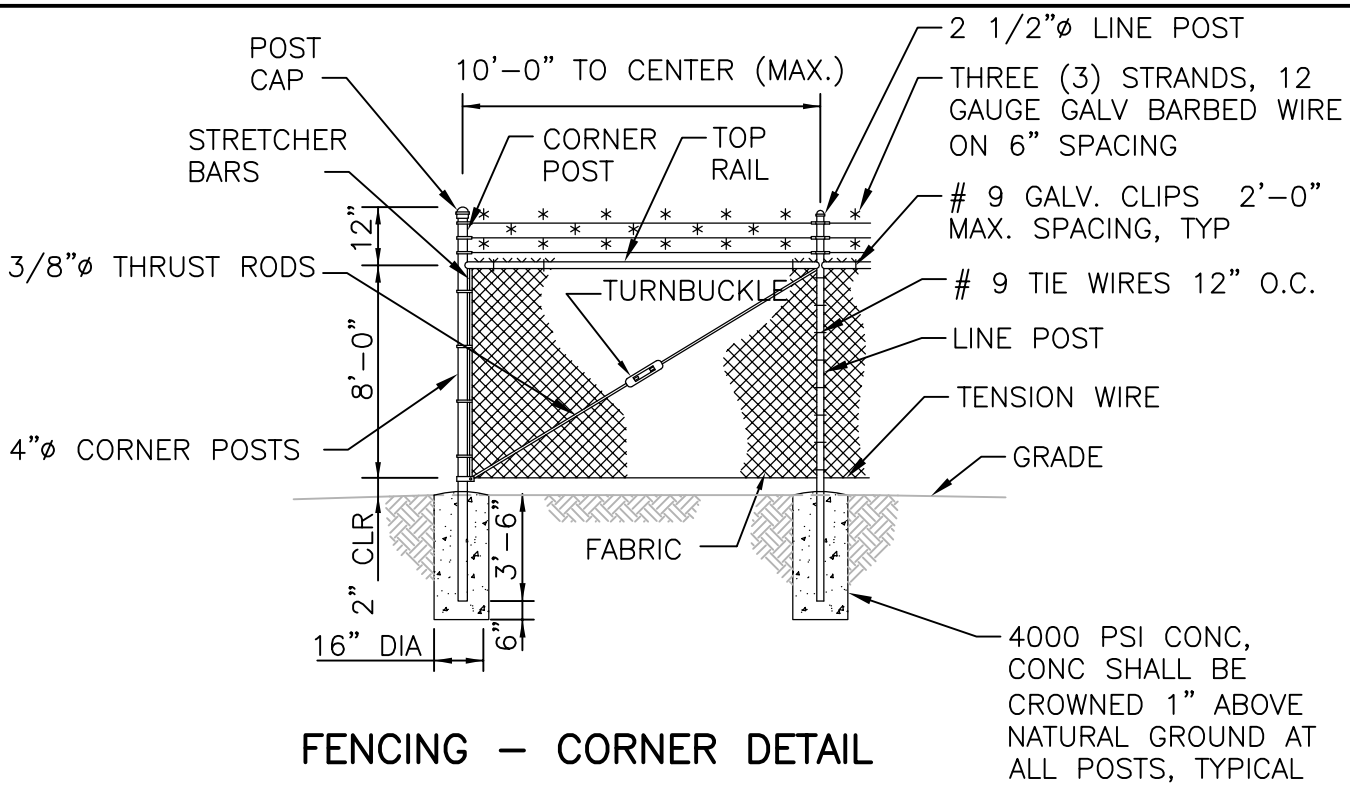

FENCING – CORNER DETAIL

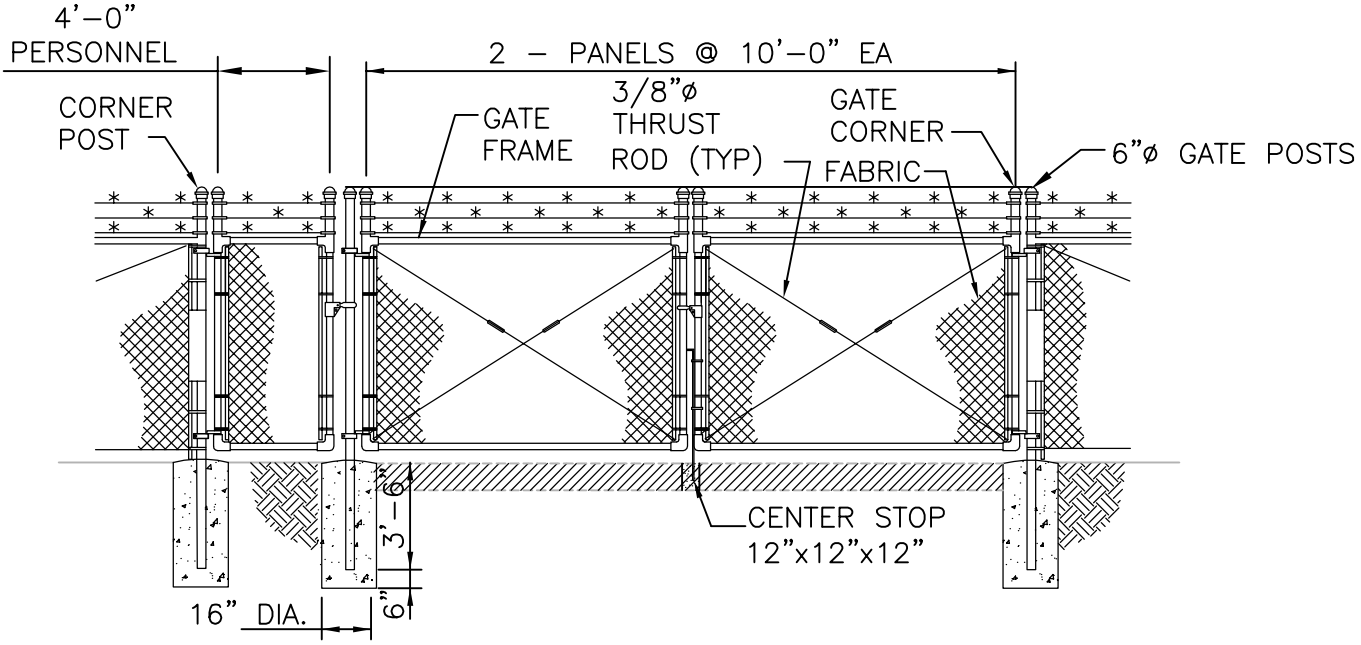

SWING GATE DETAIL

NOTES:

1. THRUST RODS ARE REQUIRED FOR EACH GATE SECTION AND THE FIRST SPAN ON EACH SIDE OF A CORNER POST ONLY.
2. TOP LOCK HDPE FENCE SLATS ARE REQUIRED FOR ALL PUMPING STATION FENCES.
3. NUMBER 4 CHAINLINK WIRE FABRIC W/TOP RAILS.

DEKALB COUNTY, GA. Department of Watershed Management	**STANDARD DETAILS**	08/08
	Fence and Gate Detail	WATER Matters
	3/16" = 1'-0"	DETAIL NO. P-010

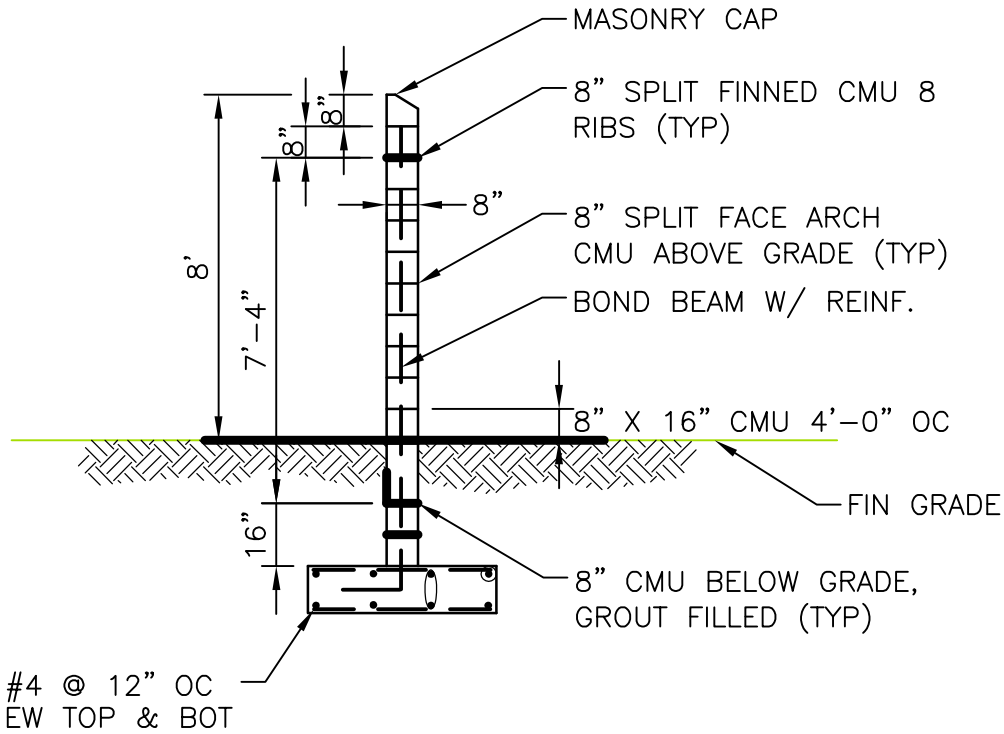

SECTION VIEW

NOTES:

1. DEVELOPER TO PROVIDE WALL DESIGN DRAWINGS SIGNED AND SEALED BY A PROFESSIONAL ENGINEER.

DEKALB COUNTY, GA. Department of Watershed Management	**STANDARD DETAILS**	08/08
	Pump Station Noise Wall	
	NOT TO SCALE	DETAIL NO. P-011

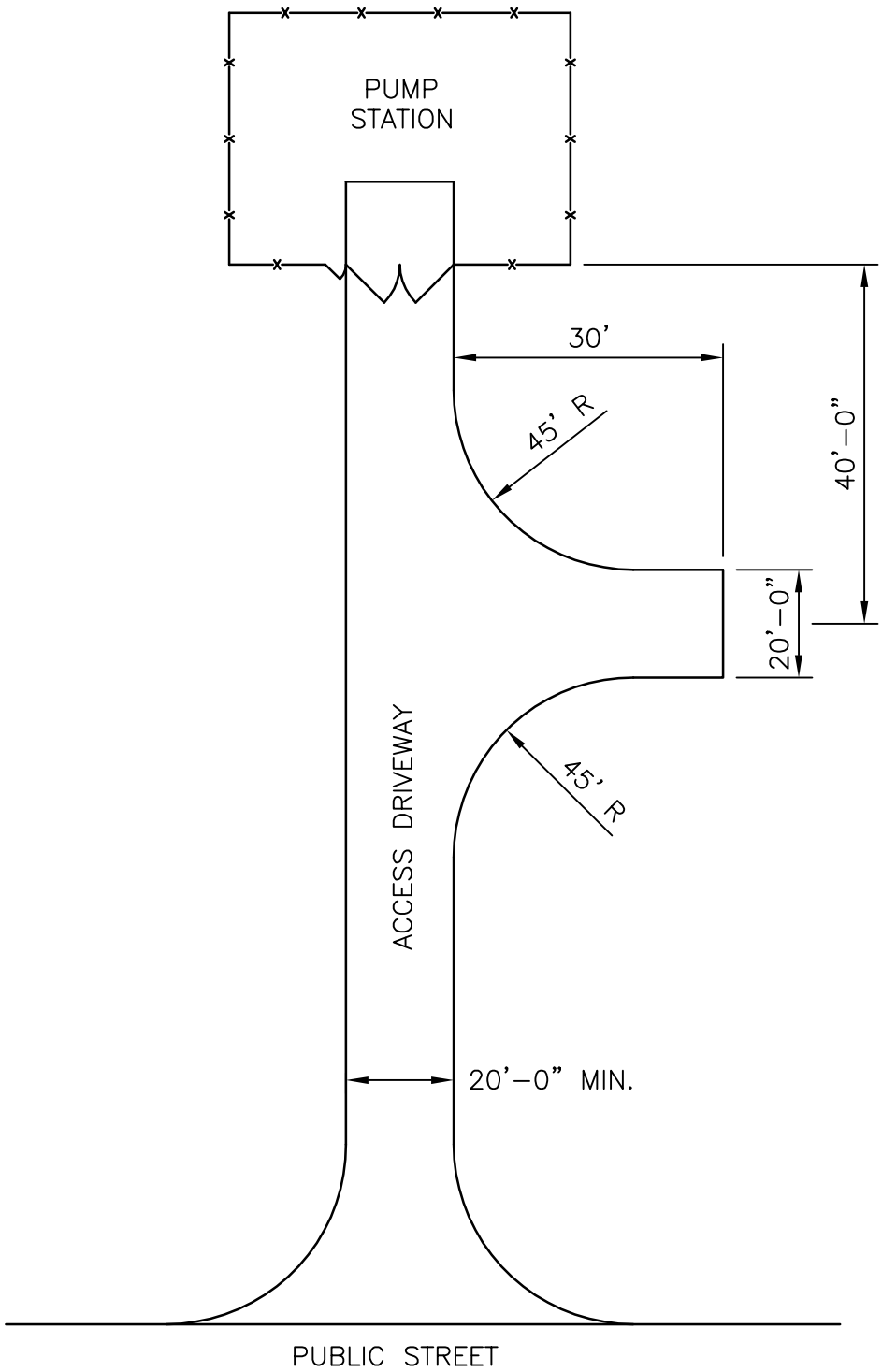

NOTES:

1. ENSURE THAT HAZMAT TRUCK MAY ENTER, BACK OUT, TURN AROUND AND EXIT PUMP STATION IN A SAFE MANNER.
2. ACCESS DRIVEWAY SHALL INCLUDE EXPANSION JOINTS AS NEEDED.
3. ACCESS DRIVEWAY REINFORCEMENT SHALL BE DESIGNED TO WITHSTAND 80,000 LB LOAD.

DEKALB COUNTY, GA. Department of Watershed Management	**STANDARD DETAILS**	08/08
	Example Access Driveway & Turn Around Area	WATER Matters
	NOT TO SCALE	DETAIL NO. P-012

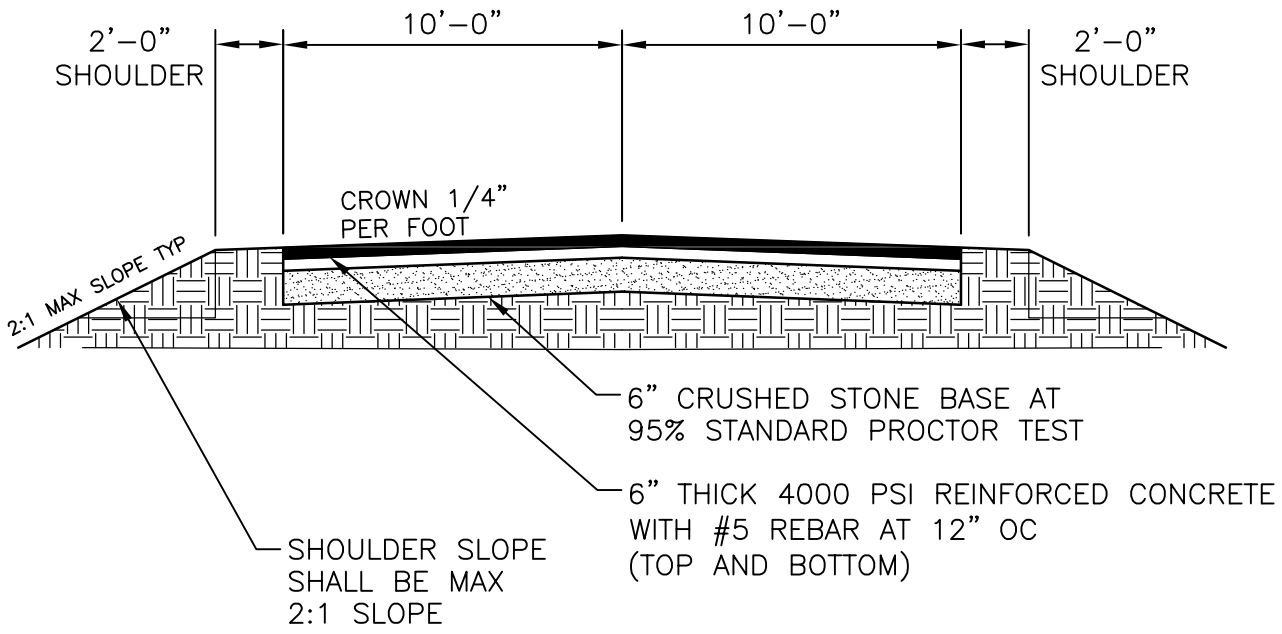

NOTES:

1. CONTRACTOR SHALL SUBMIT COPY OF PLAN AND PROFILES OF ACCESS ROAD FROM PUMP STATION SITE TO EXISTING ROAD OR STREET. SLOPE OF ACCESS ROAD SHALL COMPLY WITH DEKALB COUNTY REGULATIONS.
2. ACCESS DRIVEWAY SHALL INCLUDE EXPANSION JOINTS AS NEEDED.
3. ACCESS DRIVEWAY REINFORCEMENT SHALL BE DESIGNED TO WITHSTAND 80,000 LB LOAD.

DEKALB COUNTY, GA. Department of Watershed Management	**STANDARD DETAILS**	08/08
	Pumping Station Typical Drive Cross Section	
	NOT TO SCALE	DETAIL NO. P-013

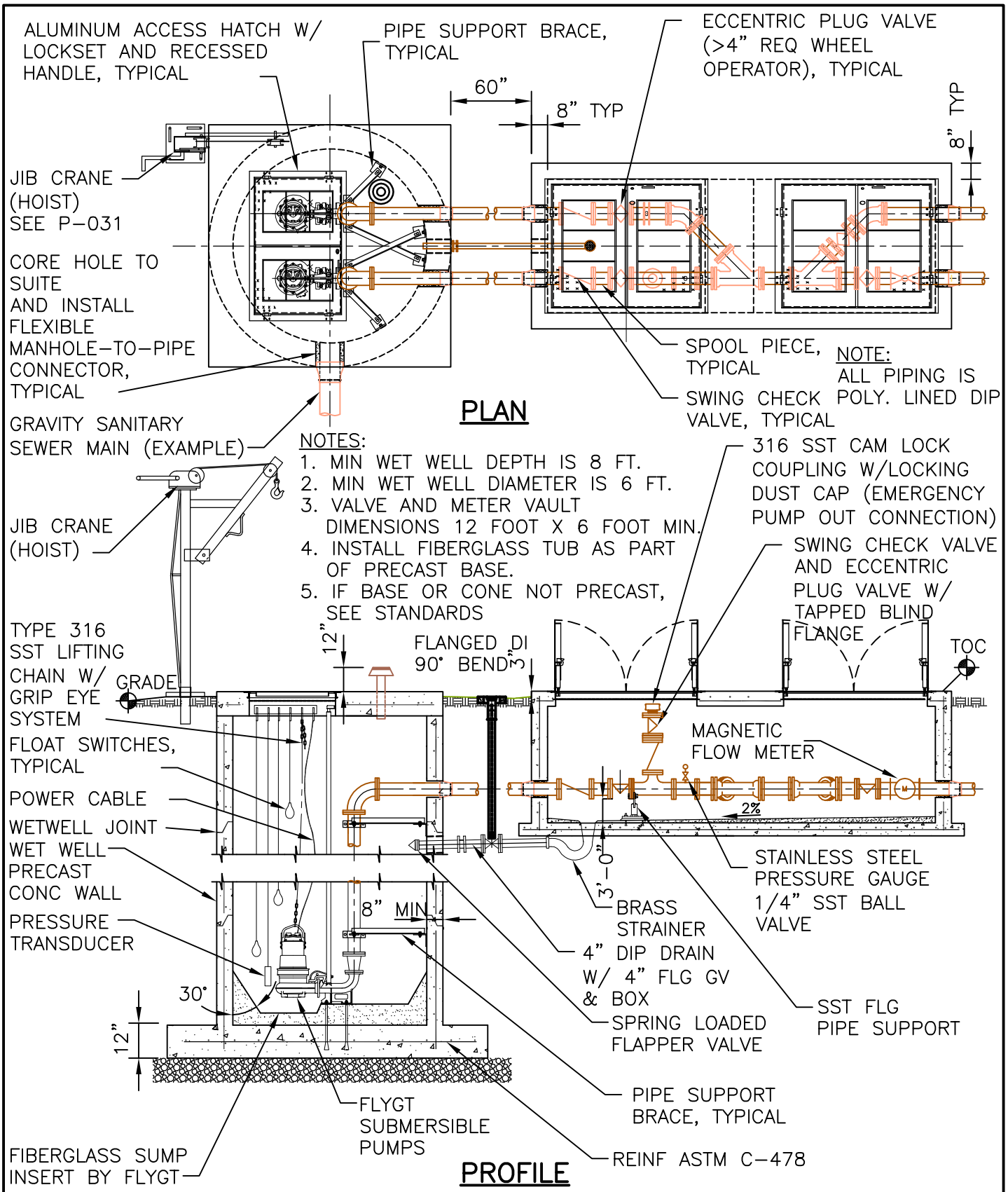

DEKALB COUNTY, GA.
Department of Watershed Management

STANDARD DETAILS

Pumping Station Detail

3/16" = 1'-0"

08/08

DETAIL NO. P-014

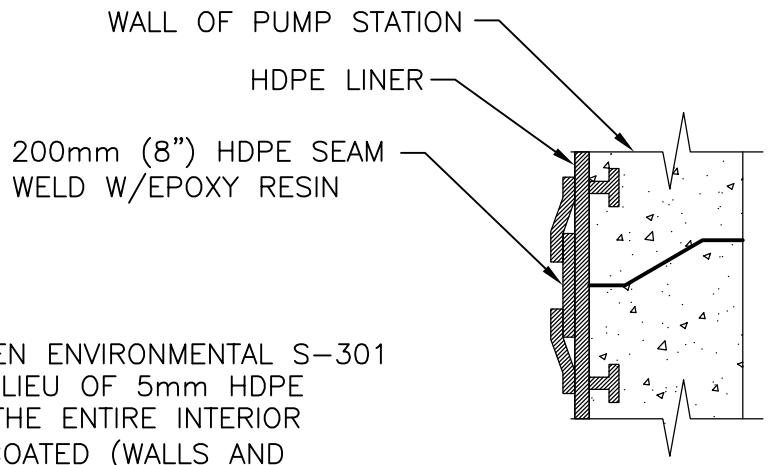

DETAIL "A"
PUMP STATION
JOINT SECTIONS

NOTE:

1. ALTERNATIVELY, 200 mil OF WARREN ENVIRONMENTAL S-301 SPRAYABLE EPOXY MAY BE USED IN LIEU OF 5mm HDPE LINER. IF THIS PRODUCT IS USED, THE ENTIRE INTERIOR AREA OF THE WET WELL SHALL BE COATED (WALLS AND FIBERGLASS TUB).

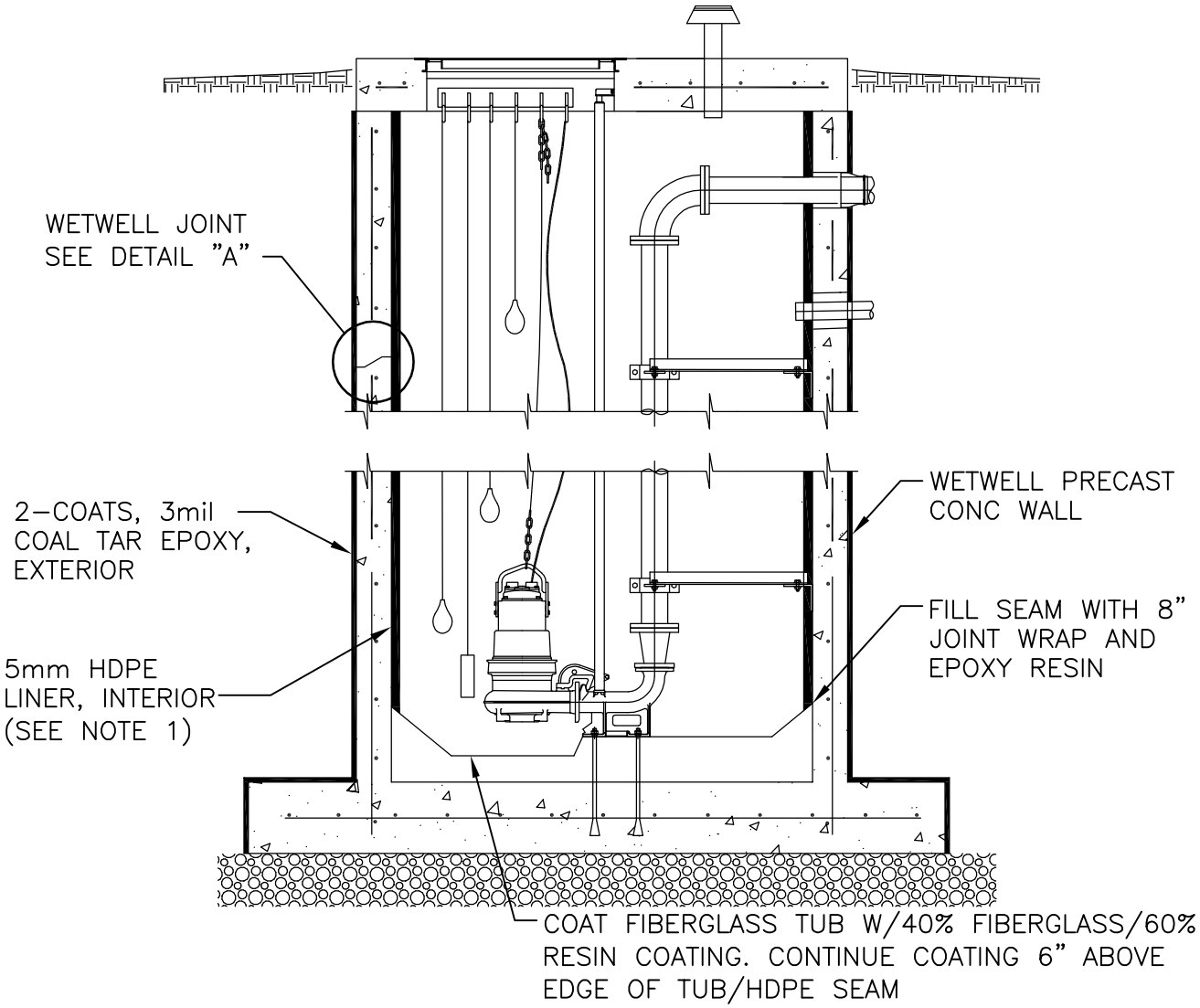

DEKALB COUNTY, GA. Department of Watershed Management	**STANDARD DETAILS**	08/08
	Pumping Station Coating Detail for HDPE Liner	
	NOT TO SCALE	DETAIL NO. P-015

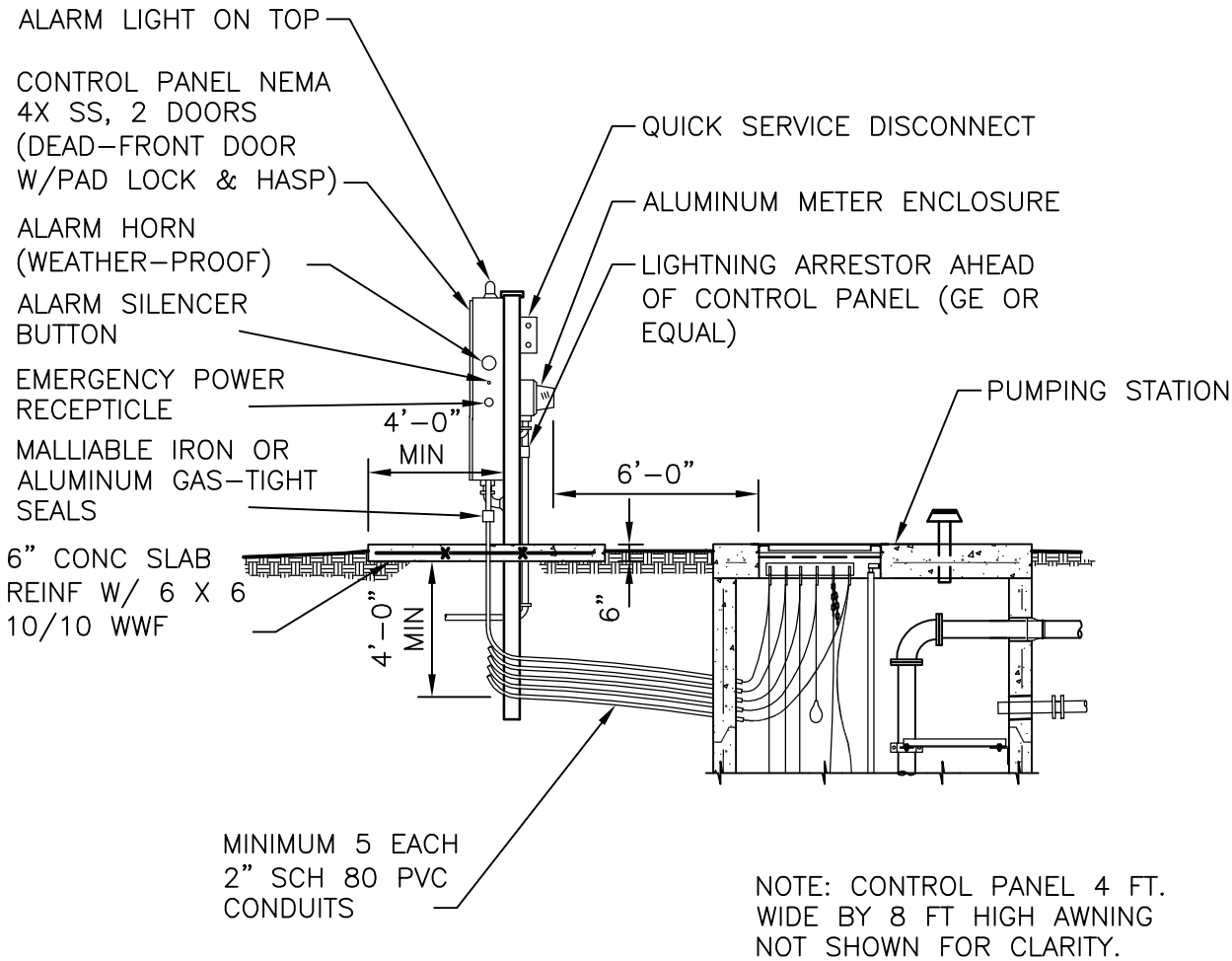

SECTION

DEKALB COUNTY, GA. Department of Watershed Management	**STANDARD DETAILS**	08/08
	Pumping Station Cable Detail	WATER Matters
	3/16" = 1'-0"	DETAIL NO. P-016

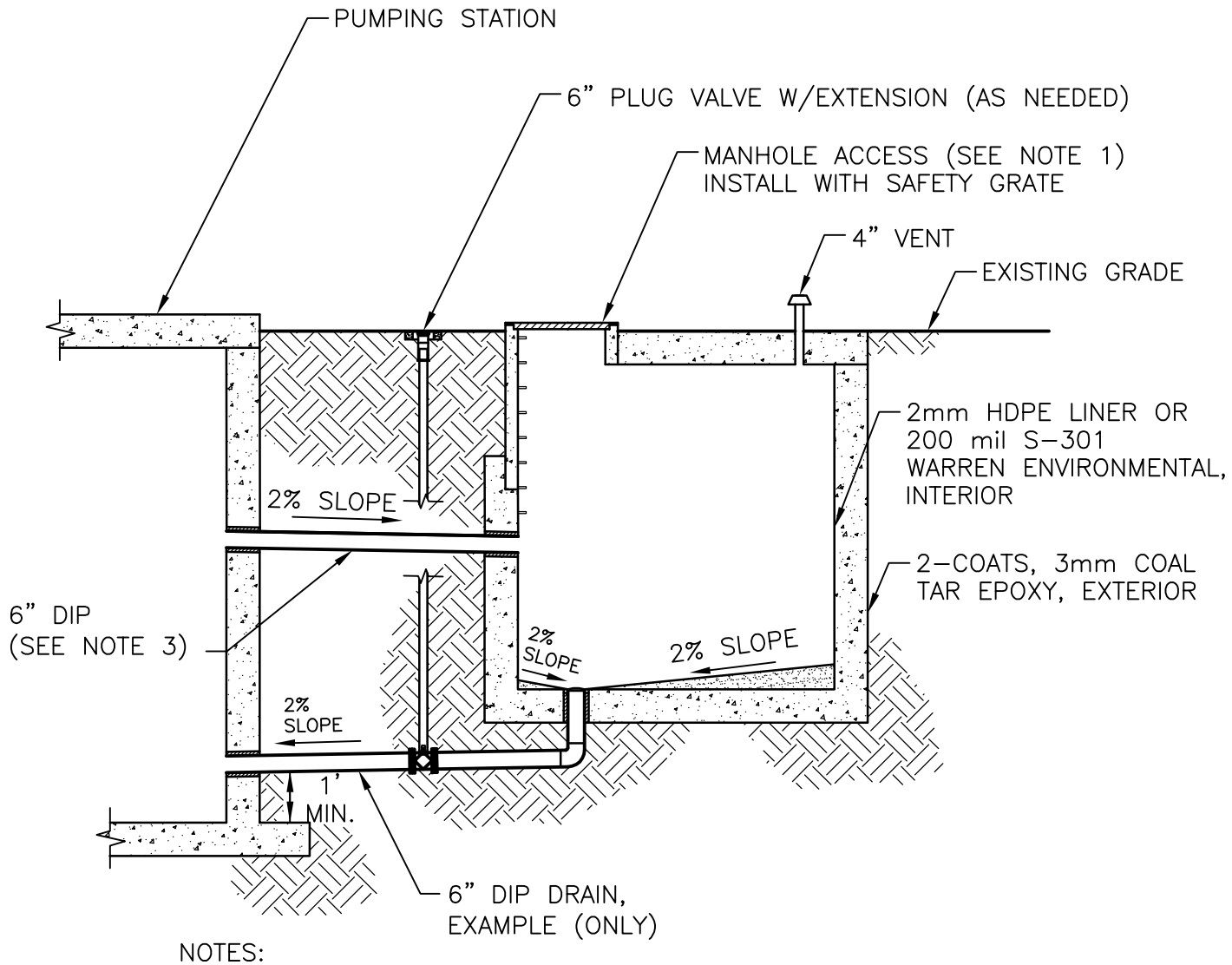

NOTES:

1. FOLLOW REQUIREMENTS FOUND IN PART III GRAVITY STANDARDS FOR STEPS AND MANHOLE COVER REQUIREMENTS.

2. PIPES ARE ROTATED TO BE SHOWN IN THE SAME VIEW.

3. OVERFLOW PIPE INVERT SHALL BE EQUAL TO HIGH LEVEL ALARM.

4. VOLUME OF OVERFLOW SHALL BE EQUAL TO THREE HOURS OF STORAGE AT PEAK FLOW, MINIMUM 32,000 GALLONS.

5. OVERFLOW TANK MUST BE ENTIRLEY WITHIN 120 FT BY 120 FT BUFFER AREA. MANHOLE ACCESS AND VENT TO BE LOCATED WITHIN FENCED AREA.

6. OVERFLOW VAULT TOP SLAB REINFORCEMENT SHALL BE DESIGNED TO WITHSTAND 80,000 LB LOAD.

DEKALB COUNTY, GA. Department of Watershed Management	**STANDARD DETAILS**	08/08
	Example Pumping Station Overflow Tank Detail	WATER Matters
	NOT TO SCALE	DETAIL NO. P-017

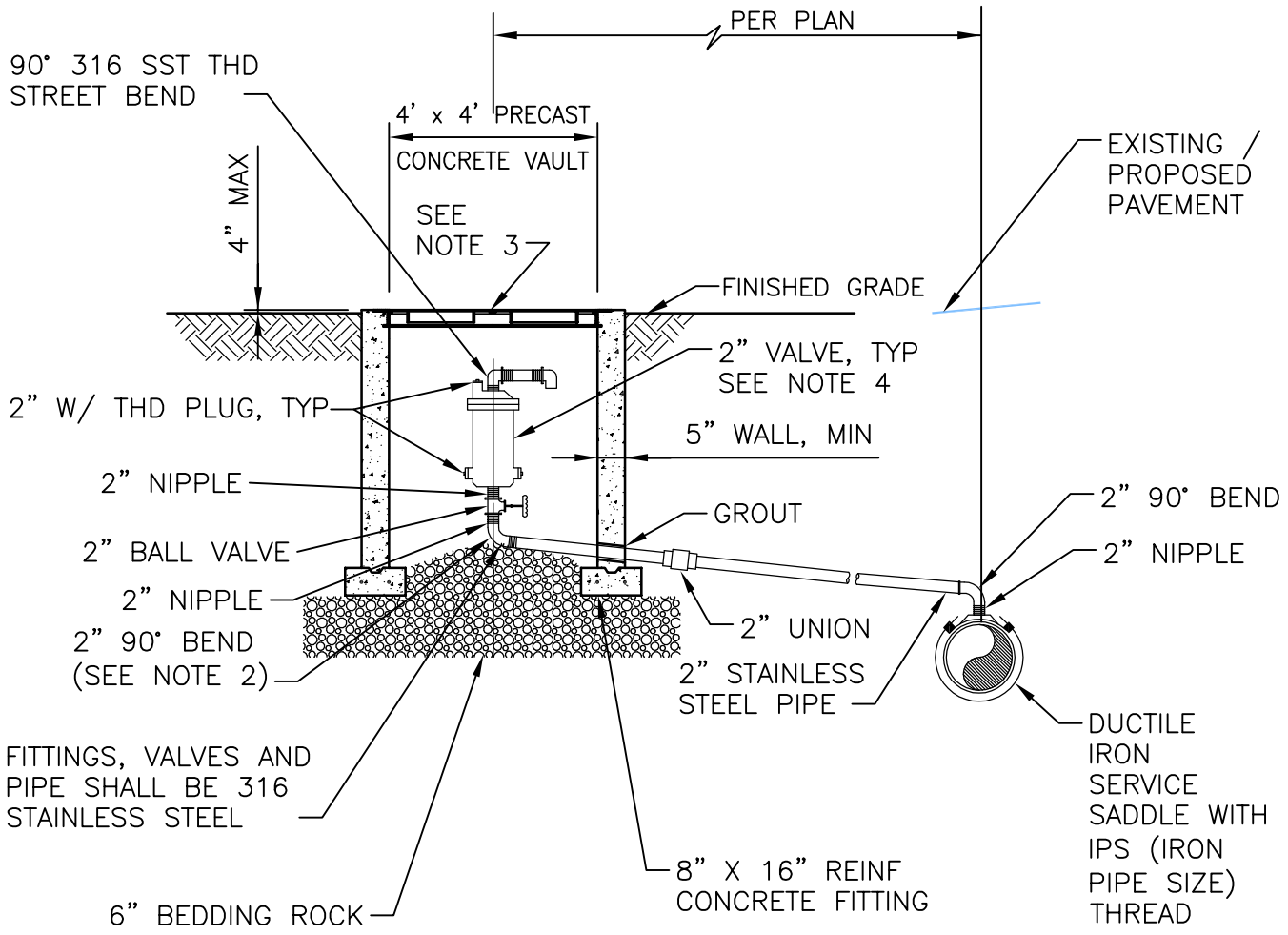

NOTES:

1. ABOVE DETAIL IS BASED ON A 2" WASTEWATER AIR/VACUUM RELEASE VALVE. VALVE SIZES SHALL BE DETERMINED BY THE DEVELOPER'S ENGINEER AND APPROVED BY DCDWM PRIOR TO INSTALLATION.

2. THE MINIMUM DIMENSION FROM INVERT TO FINISHED GRADE SHALL BE 4.0 FEET.

3. FRAME AND COVER SHALL BE EQUIVALENT TO U.S. FOUNDRY USF 170-E-ORS.

4. VALVE SHALL BE VALMATIC 302BW W/BWA OR EQUAL. SIZE SHALL BE BASED ON FORCE MAIN SIZE

5. THE WASTEWATER AIR/VACUUM RELEASE VALVE VAULT IS NOT DETAILED FOR VEHICULAR TRAFFIC LOADS AND IS NOT INTENDED FOR PLACEMENT WITHIN THE TRAVELED WAY.

DEKALB COUNTY, GA. Department of Watershed Management	**STANDARD DETAILS**	08/08
	Combination Air-Vaccum Valve Installation Detail	WATER Matters
	NOT TO SCALE	DETAIL NO. P-018

LEGEND

AH	–	ALARM HORN
AL	–	ALARM LIGHT
ASB	–	ALARM SILENCE BUTTON
ATS	–	ALTERNATOR TEST SWITCH
CCB	–	CONTROL CIRCUIT BREAKER
DPDT	–	DOUBLE POLE DOUBLE THROW
DRB	–	DUPLEX RECEPTACLE BREAKER
ECB	–	ELAPSE TIME METER
F	–	FUSE
FB	–	FUSE BLOCK
FL	–	FLASHER
FR	–	FLOAT REGULATOR
GFDR	–	GROUND FAULT DUPLEX RECEPTACLE
GR	–	GENERATOR RECEPTACLE
HOA	–	HANDS–OFF–AUTO SELECTOR SWITCH
MB	–	MOTOR BREAKER
MCB	–	MAIN CIRCUIT BREAKER
MS	–	MOTOR STARTER
OL	–	OVERLOAD
PL	–	PILOT LIGHT
PM	–	PHASE MONITOR
R	–	RELAY
RCB	–	RTU CIRCUIT BREAKER
RL	–	RUNNING LIGHT
RTU	–	REMOTE TRANSMITTING UNIT
TB	–	TERMINAL BLOCK
TTS	–	THERMAL TERMINAL STRIP
TVSS	–	TRANSIENT VOLTAGE SURGE SUPPRESSER
XFMR	–	TRANSFORMER

PUMPING STATION RTU CONNECTIONS

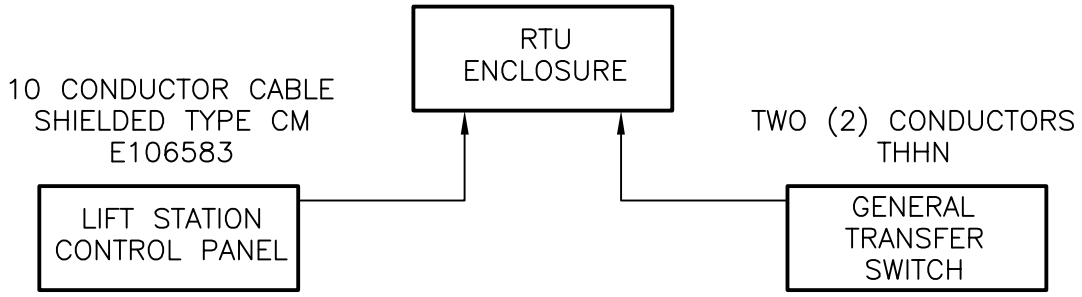

RTU ENCLOSURE

MIXED I/O MODULE

	1	SPARE
	2	SPARE
	3	SPARE
	4	SPARE
	5	SPARE
FROM RTU ENCLOSURE DOOR LIMIT	6	SITE SECURITY
	7	PUMP 3 FAILURE*
	8	PUMP 4 FAILURE*
#14 AWG FROM GEN TRANS	9	GENERATOR RUNNING
	10	PUMP 1 FAILURE
	11	PUMP 2 FAILURE
	12	HIGH WET WELL
	13	CONTROL VOLTAGE FAILURE/STATION FLOODED
	14	COMMON
	15	SPARE
	16	SPARE
	17	SPARE
	18	SPARE
	19	SPARE
	20	SPARE
	21	SPARE
	22	SPARE
	23	SPARE
	24	SPARE

* IF NEEDED

DEKALB COUNTY, GA.
Department of Watershed Management

STANDARD DETAILS

Pumping Station RTU Connections

NOT TO SCALE

08/08

DETAIL NO. P-020

Basic Lift Station Control Panel – RTU Alarm Inputs

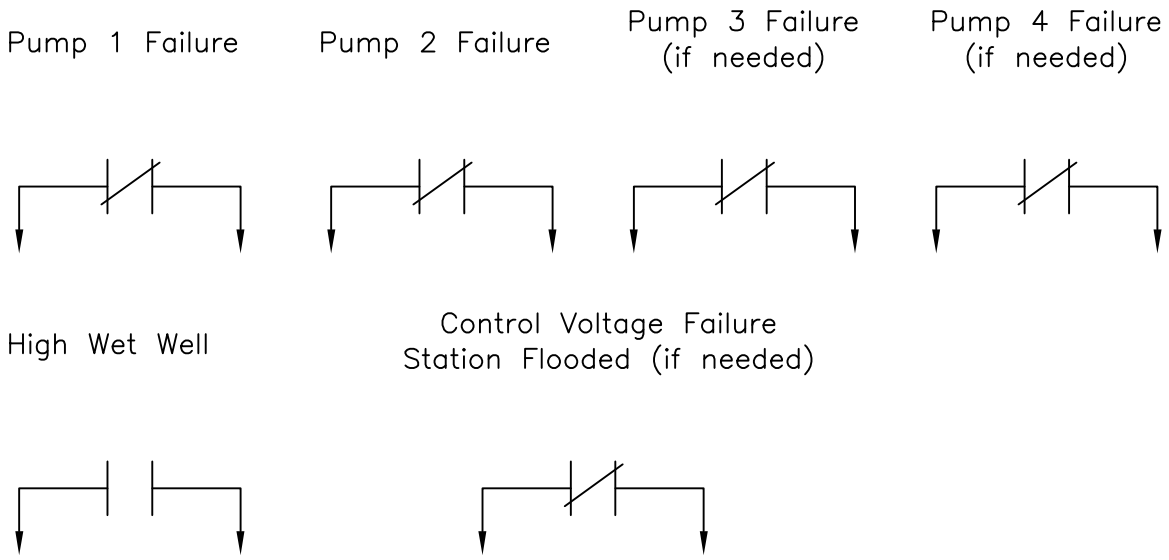

Typical for 240V
3 Phase Power

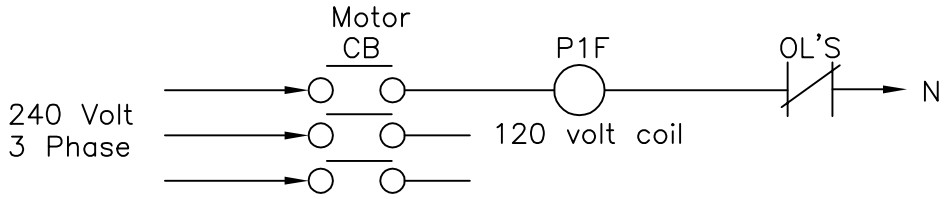

Typical for 480V
3 Phase Power
(Prefered)

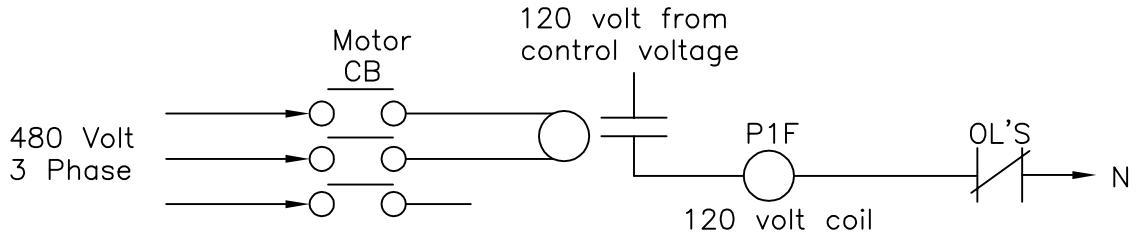

Relay Type: 480 volt AC coil, Porter & Brumfield PRD–11AYO–480 or equal.

DEKALB COUNTY, GA. Department of Watershed Management	**STANDARD DETAILS**	08/08
	Basic Pumping Station Control Panel Detail RTU Alarm Inputs NOT TO SCALE	DETAIL NO. P-021

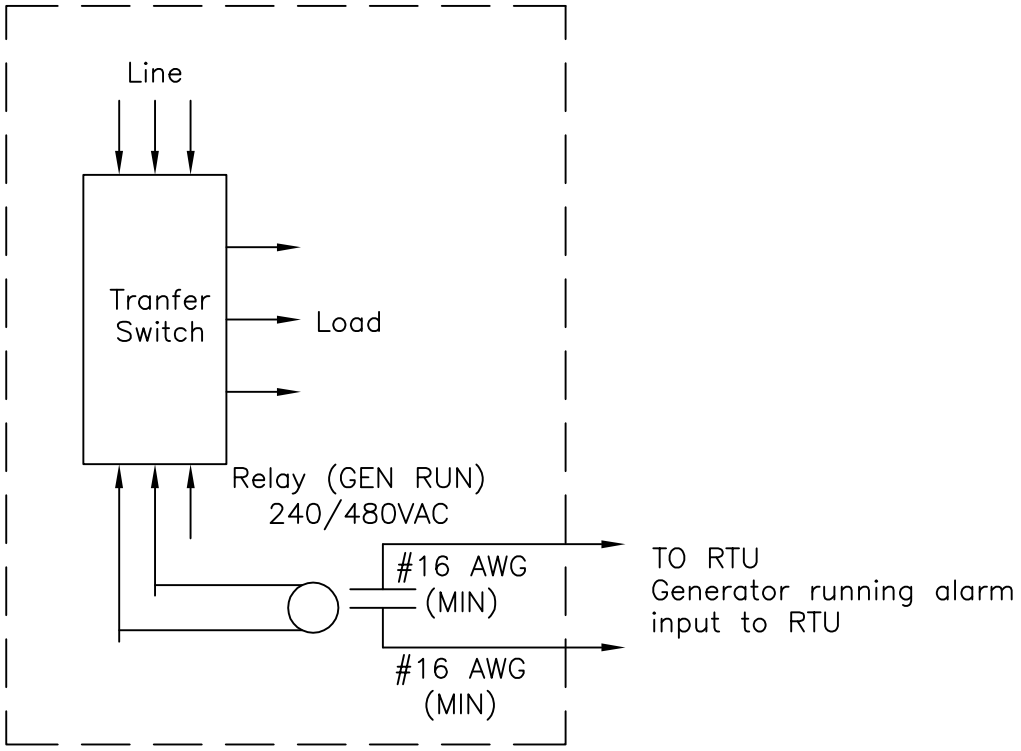

Relay Types: 240VAC coil, 8 pin cube type; 480VAC coil Porter & Brumfield PRD-11AYO-480 or equal.

DEKALB COUNTY, GA. Department of Watershed Management	**STANDARD DETAILS**	08/08
	Pumping Station Generator Transfer Switch Generator Run Alarm NOT TO SCALE	DETAIL NO. P-022

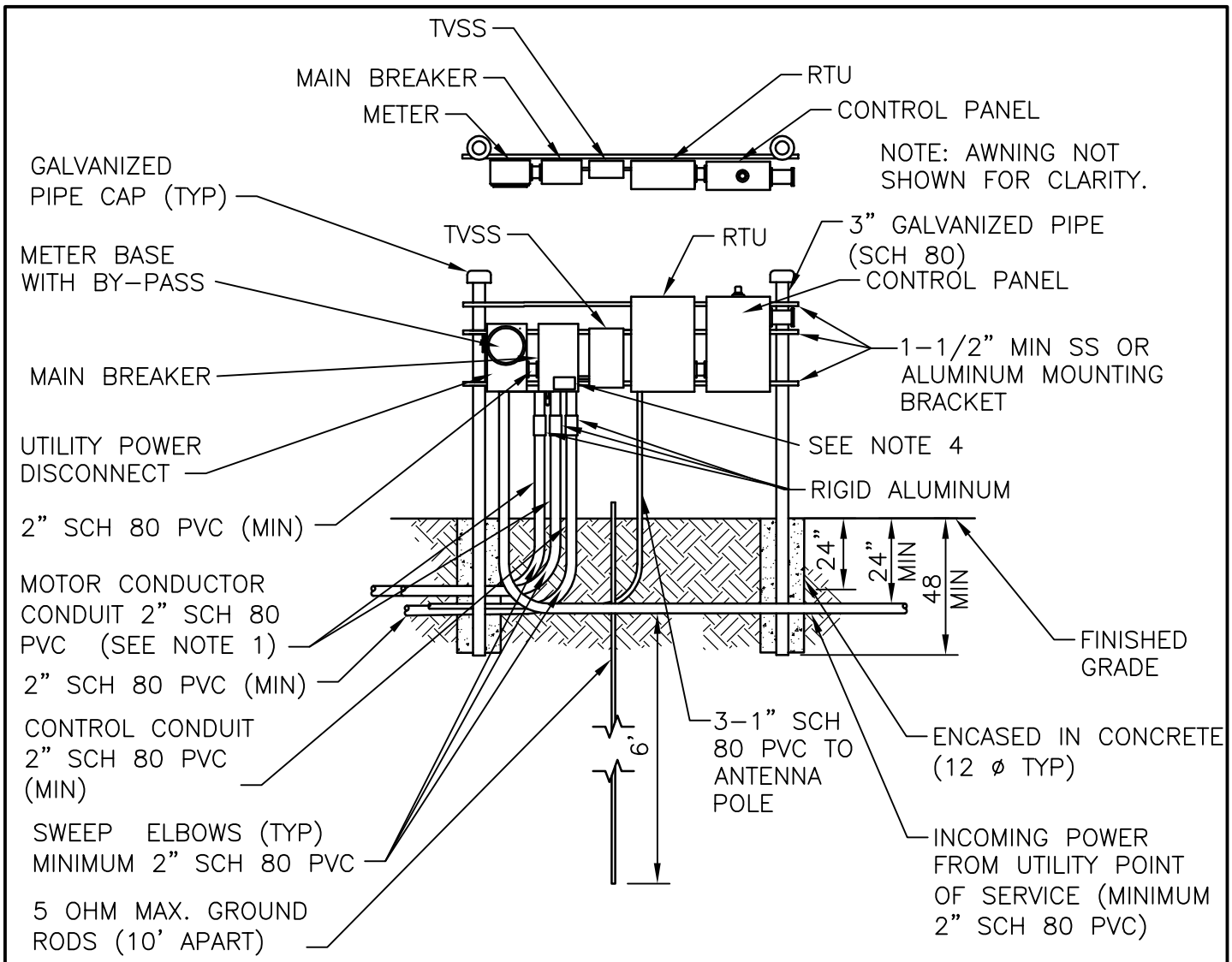

PANEL INSTALLATION NOTES:

1. PUMP MOTOR CONDUIT SHALL BE SIZED TO BE ONLY 40% FILLED. MINIMUM CONDUIT SIZE TO BE 2" SCH 80 PVC.
2. POWER SUPPLY SHALL BE UNDERGROUND ON THE LIFT STATION SITE AND SHALL BE 3-PHASE, FROM A 3-PHASE SOURCE ONLY.
3. AN ELECTRICAL GROUNDING SYSTEM SHALL BE INSTALLED AS PER THE NATIONAL ELECTRICAL CODE, LOCAL CODES AND ORDINANCES. AN UNDERGROUND PERIMETER CABLE GROUNDING SYSTEM SHALL BE INSTALLED WITH CONNECTIONS TO AT LEAST WET WELL COVER, VALVE VAULT COVER, CONTROL PANELS, GENERATOR, UTILITY COMPANY TRANSFORMER, MANUAL DISCONNECT SWITCH AND METAL FENCE.
4. THE STATION NAME, UTILITIES I.D. NUMBER AND ADDRESS SHALL BE AFFIXED TO THE FRONT OF THE METER CABINET.
5. ALL MOUNTING HARDWARE & BRACKETS SHALL BE 316 STAINLESS STEEL.
6. ON A 4-WIRE, DELTA SYSTEM, THE HIGH-LEG SHALL BE IDENTIFIED WITH ORANGE COLOR TAPE AT ALL CONNECTION POINTS AND SHALL BE LOCATED ON THE "B" PHASE AT THE LINE SIDE OF THE MAIN DISCONNECT.
7. PANELS AND ELECTRICAL CABINETS SHALL BE COVERED WITH A 4 FT. WIDE BY 8 FT. HIGH AWNING (NOT SHOWN)

DEKALB COUNTY, GA. Department of Watershed Management	**STANDARD DETAILS**	08/08
	Example Pumping Station ControlL Panel Detail 240 Volt Version NOT TO SCALE	WATER Matters
		DETAIL NO. P-023

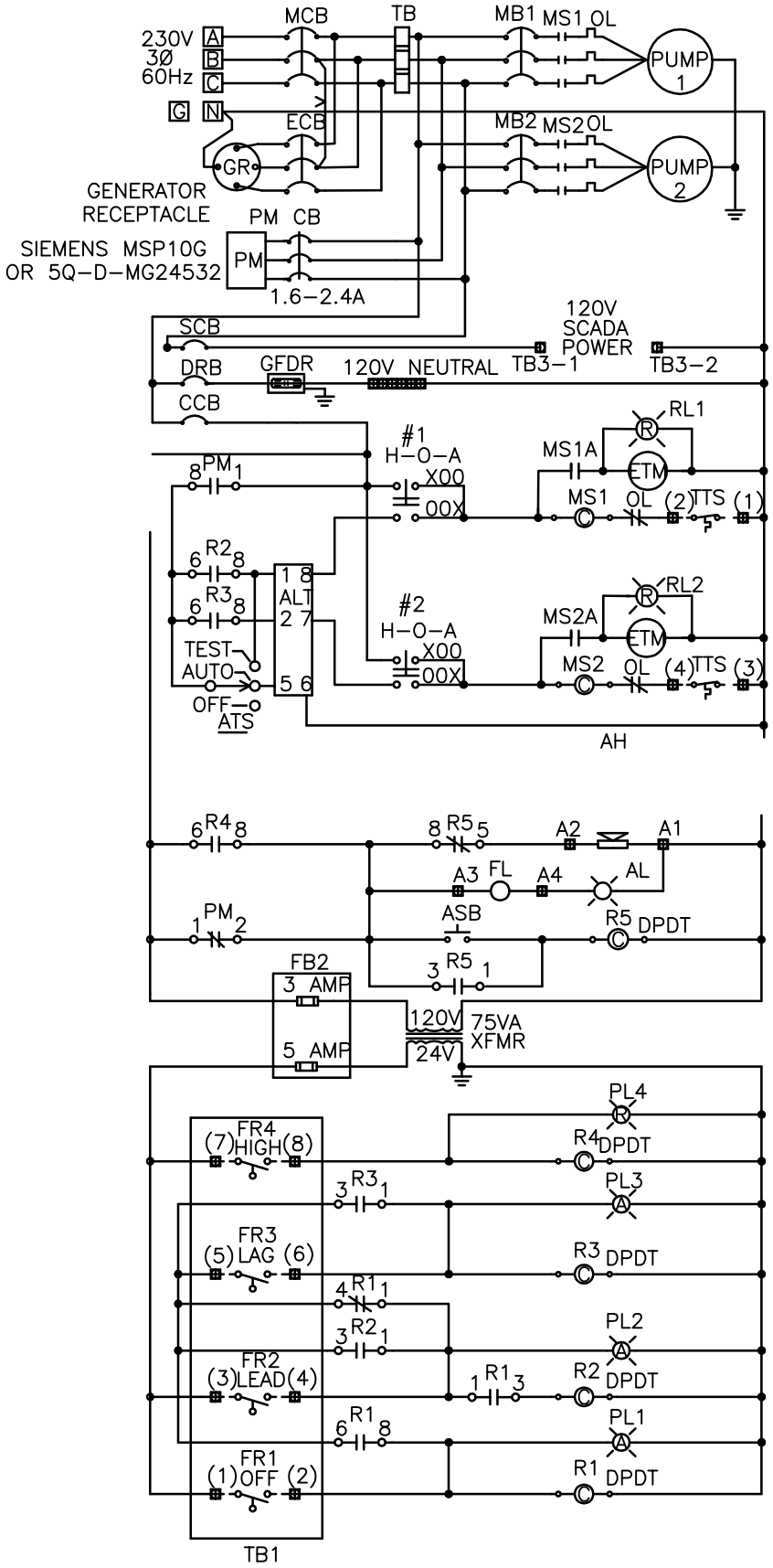

DEKALB COUNTY, GA.
Department of Watershed Management

STANDARD DETAILS

Example Duplex Pump Control Schematic (240V)

NTS

08/08

DETAIL NO. P-024

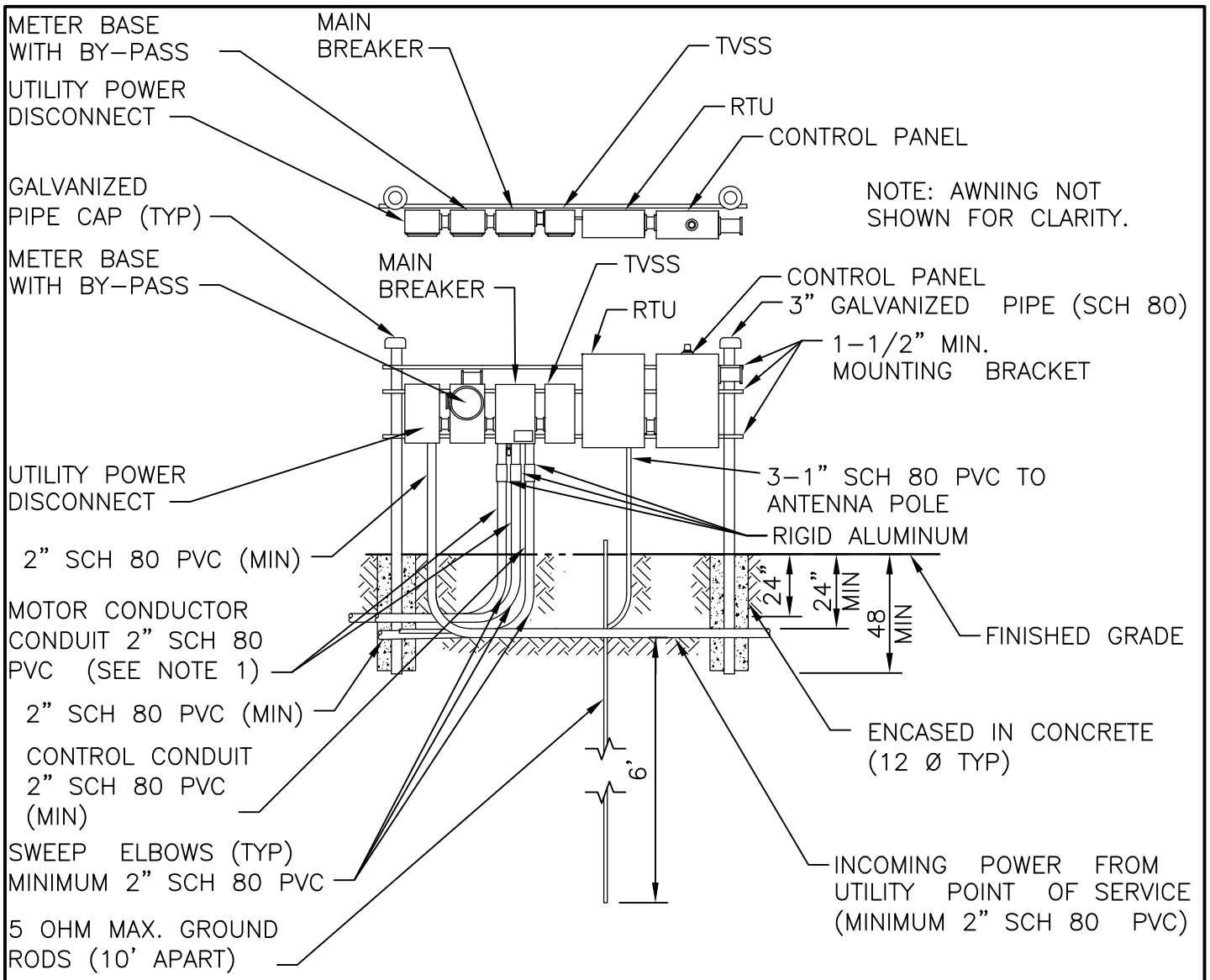

PANEL INSTALLATION NOTES:

1. PUMP MOTOR CONDUIT SHALL BE SIZED TO BE ONLY 40% FILLED. MINIMUM CONDUIT SIZE TO BE 2" SCH 80 PVC.
2. POWER SUPPLY SHALL BE UNDERGROUND ON THE LIFT STATION SITE AND SHALL BE 3-PHASE, FROM A 3-PHASE SOURCE ONLY.
3. AN ELECTRICAL GROUNDING SYSTEM SHALL BE INSTALLED AS PER THE NATIONAL ELECTRICAL CODE, LOCAL CODES AND ORDINANCES. AN UNDERGROUND PERIMETER CABLE GROUNDING SYSTEM SHALL BE INSTALLED WITH CONNECTIONS TO AT LEAST WET WELL COVER, VALVE VAULT COVER, CONTROL PANELS, GENERATOR, UTILITY COMPANY TRANSFORMER, MANUAL DISCONNECT SWITCH AND METAL FENCE.
4. THE STATION NAME, UTILITIES I.D. NUMBER AND ADDRESS SHALL BE AFFIXED TO THE FRONT OF THE METER CABINET.
5. ALL MOUNTING HARDWARE & BRACKETS SHALL BE 316 STAINLESS STEEL.
6. ON A 4-WIRE, DELTA SYSTEM, THE HIGH-LEG SHALL BE IDENTIFIED WITH ORANGE COLOR TAPE AT ALL CONNECTION POINTS AND SHALL BE LOCATED ON THE "B" PHASE AT THE LINE SIDE OF THE MAIN DISCONNECT.
7. PANELS AND ELECTRICAL CABINETS SHALL BE COVERED WITH A 4 FT. by 8 FT. AWNING (NOT SHOWN).

DEKALB COUNTY, GA. Department of Watershed Management	**STANDARD DETAILS**	08/08
	Pump Station Control Panel (480V)	WATER Matters
	NTS	DETAIL NO. P-025

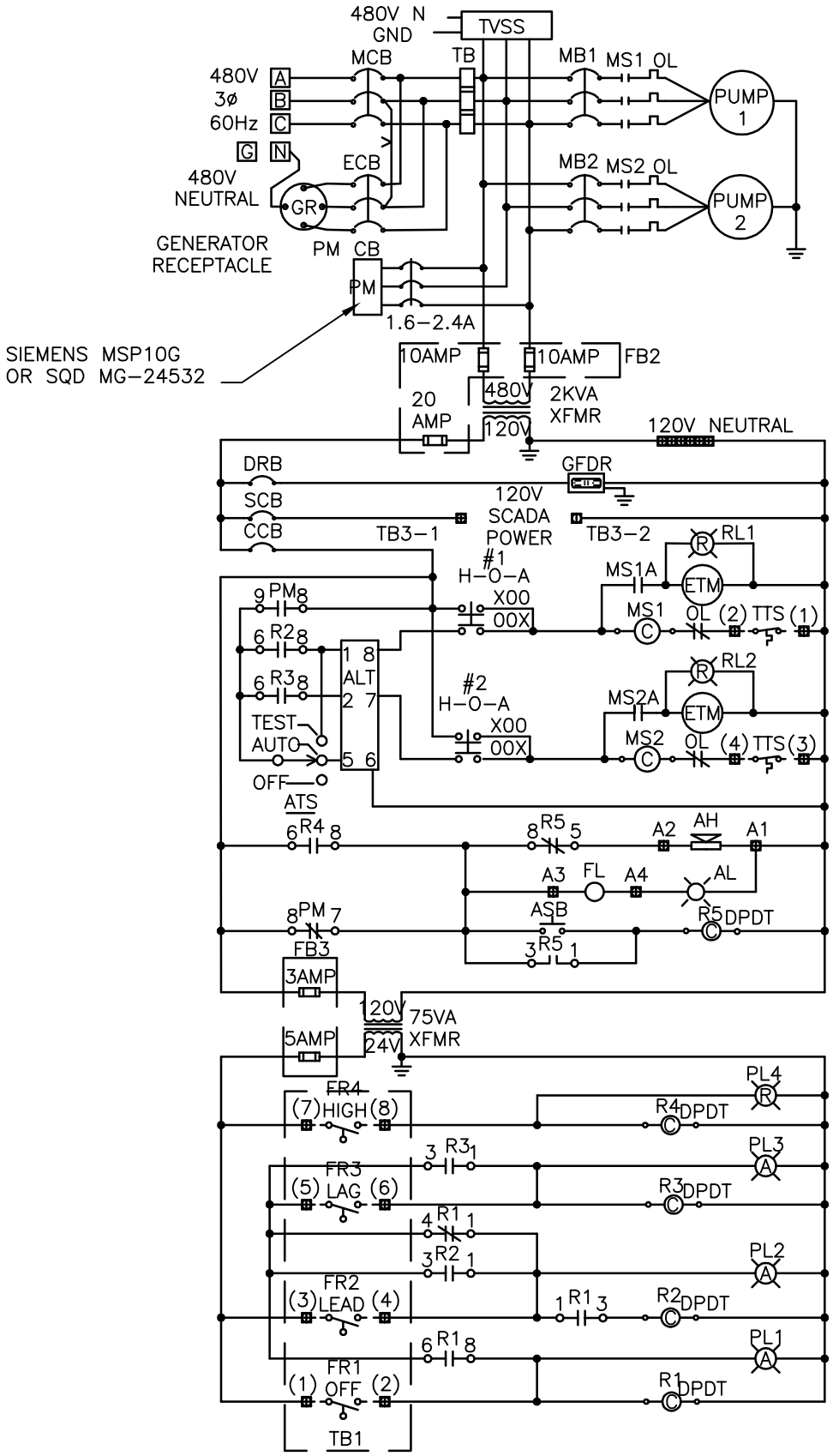

DEKALB COUNTY, GA.
Department of Watershed Management

STANDARD DETAILS

Example Duplex Pump Control Schematic (480V)

NTS

08/08

DETAIL NO. P-026

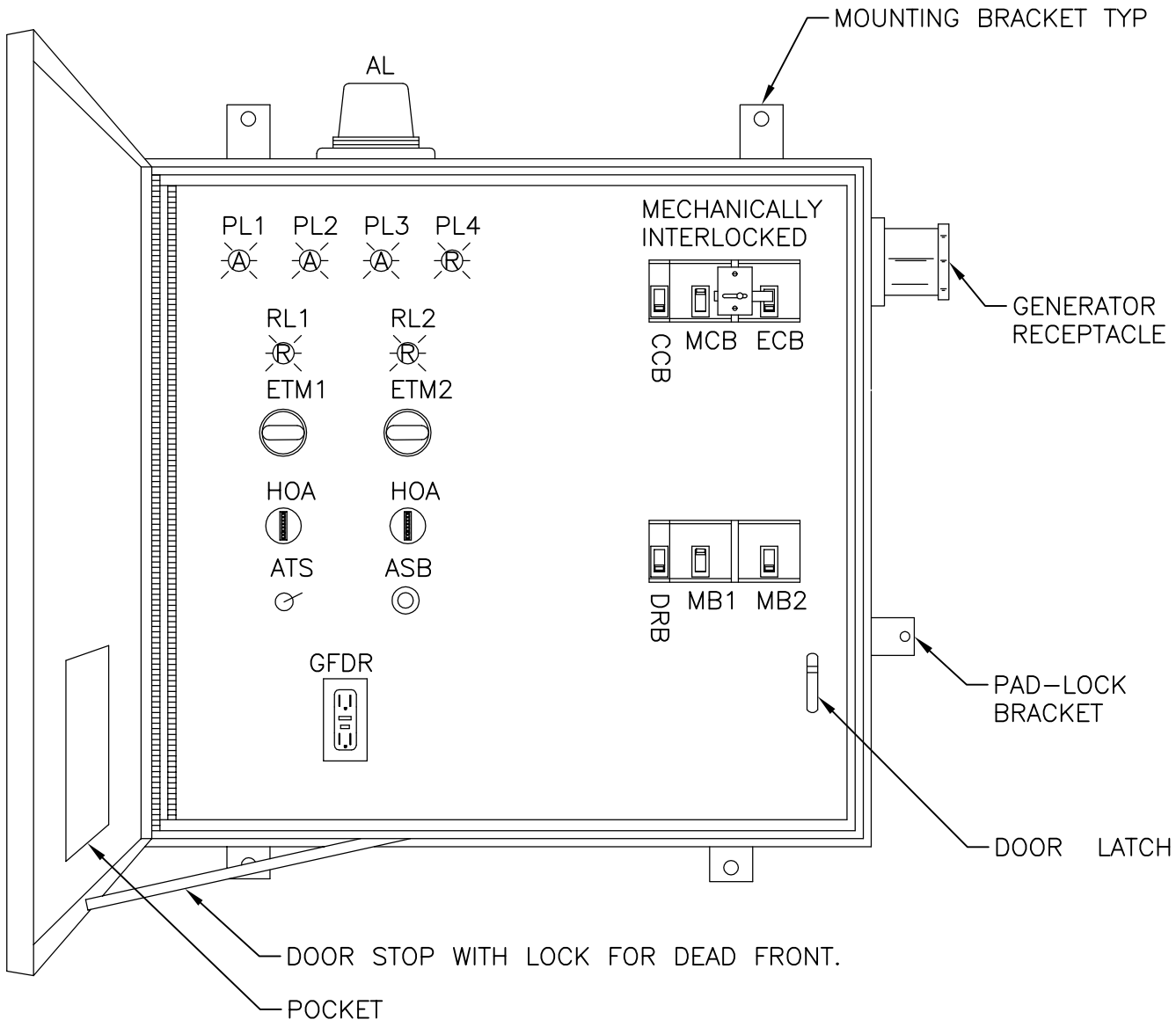

NOTES:

1. DEADFRONT LAYOUT NEMA TYPE 3R SS ENCLOSURE W/CONTINUOUS HINGE. ALL HARDWARE TYPE 316 SS TYPICAL, ACTUAL LAYOUT MAY VARY WITH HORSEPOWER AND NUMBER OF PUMPS.
2. ALL CONTROL WIRE TO BE #16 AWG, MINIMUM.
3. CONTROL PANEL SHALL BE UL LISTED AND LABELED.

DEKALB COUNTY, GA. Department of Watershed Management	**STANDARD DETAILS**	08/08
	Example Duplex Control Panel Enclosure Dead Front Layout	
	NTS	DETAIL NO. P-027

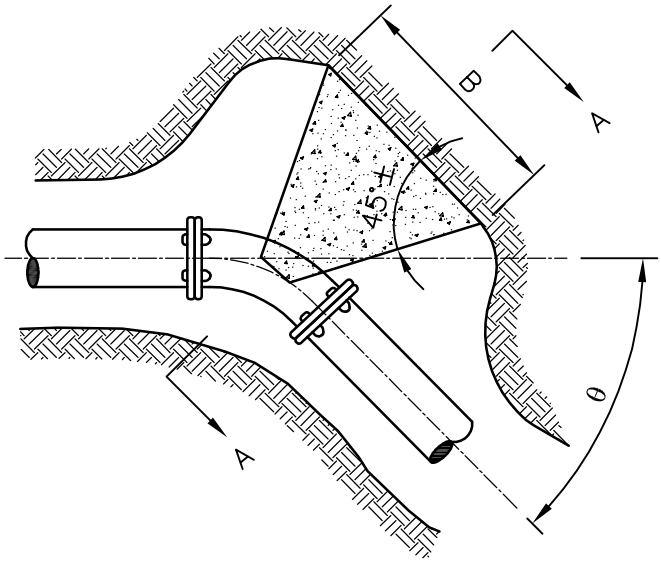

PLAN

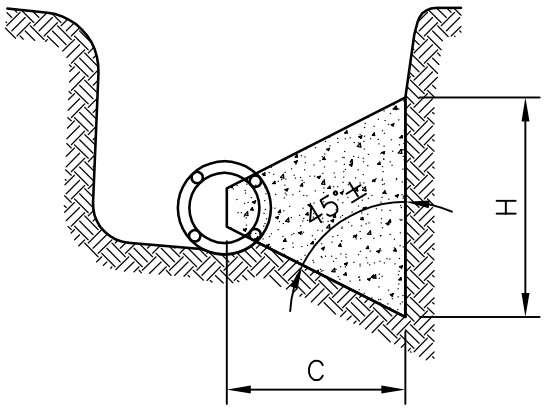

SECTION A–A

FITTING θ	(IN)	B (FT)	H (FT)	C (FT)	VOL (YD^3)
11–1/4	6	0.9	0.8	0.45	0.010
	8	1.2	1.1	0.60	0.022
	10	1.5	1.3	0.75	0.041
	12	1.8	1.6	0.90	0.071
	16	2.3	2.2	1.15	0.149
22–1/2	6	1.3	1.1	0.65	0.023
	8	1.6	1.6	0.80	0.048
	10	2.1	1.9	1.05	0.097
	12	2.5	2.3	1.25	0.165
	16	3.3	3.0	1.65	0.362
45	6	1.7	1.6	0.85	0.050
	8	2.2	2.2	1.10	0.113
	10	2.8	2.7	1.40	0.222
	12	3.3	3.3	1.65	0.375
	16	4.5	4.3	2.25	0.887
90	6	2.3	2.2	1.15	0.118
	8	3.1	2.9	1.55	0.278
	10	3.8	3.7	1.90	0.530
	12	4.6	4.4	2.30	0.921
	16	6.1	5.9	3.05	2.142
TEES	6	2.1	1.8	1.00	0.073
	8	2.6	2.5	1.30	0.170
	10	3.2	3.1	1.60	0.319
	12	3.9	3.7	1.95	0.565
	16	5.1	5.0	2.55	1.303

NOTES:

1. DIMENSIONS OF THRUST BLOCKS WERE CALCULATED ASSUMING A STATIC PRESSURE OF 250 PSI AND A SOIL BEARING PRESSURE OF 2,000 PSF.

2. DIMENSIONS SHOWN CAN BE VARIED AS FIELD CONDITIONS DICTATE, BUT IT IS IMPORTANT THAT THE CORRECT VOLUME AS SHOWN IN TABLE BE USED AND THAT ALLOWABLE SOIL BEARING PRESSURE NOT BE EXCEEDED.

DEKALB COUNTY, GA.
Department of Watershed Management

STANDARD DETAILS

Blocking Detail
Horizontal Thrust

NTS

08/08

DETAIL NO. P-028

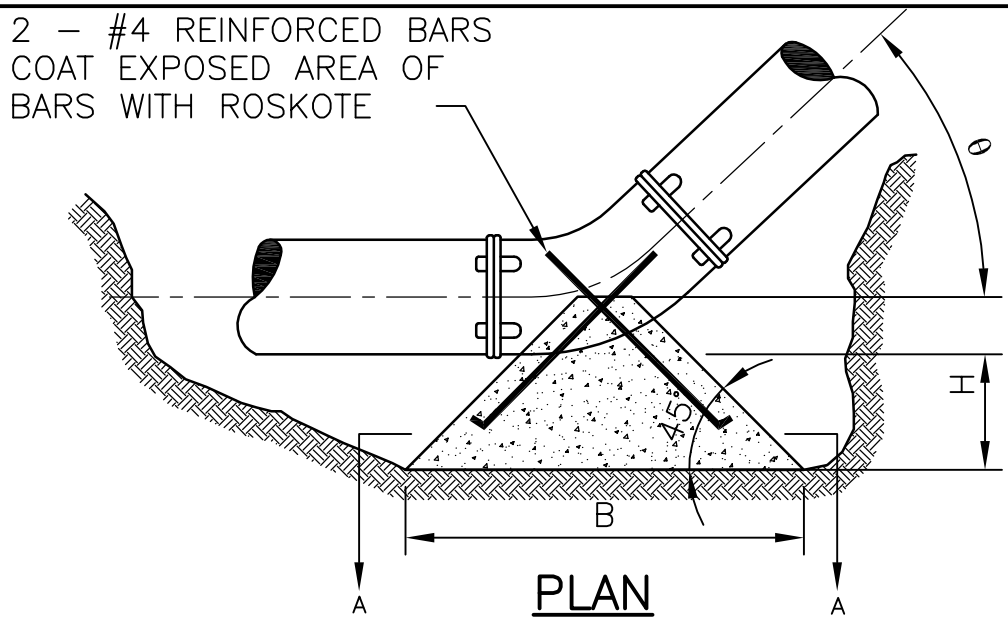

PLAN

FITTING θ	DIA (IN)	B (FT)	H (FT)	VOL (YD^3)
11–1/4	6	1.0	0.3	0.008
	8	1.2	0.4	0.012
	10	1.5	0.6	0.026
	12	1.9	0.8	0.055
	16	2.4	1.0	0.110
22–1/2	6	1.3	0.5	0.017
	8	1.7	0.7	0.039
	10	2.1	0.9	0.075
	12	2.5	1.1	0.129
	16	3.2	1.6	0.308
45	6	1.7	0.7	0.039
	8	2.2	0.9	0.083
	10	2.7	1.2	0.164
	12	3.3	1.5	0.305
	16	4.3	2.0	0.688

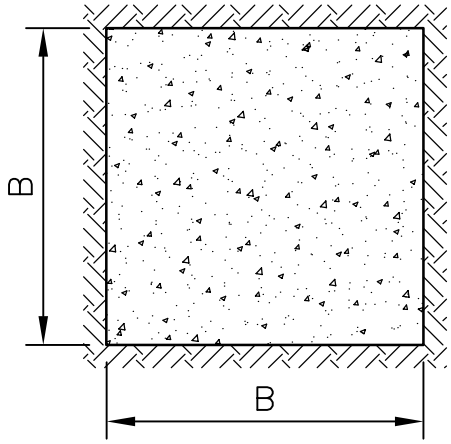

SECTION A–A

NOTE:

1. DIMENSIONS OF THRUST BLOCKS WERE CALCULATED ASSUMING A STATIC PRESSURE OF 250 PSI, A DEPTH OF COVER OF 4 FT., AND A SOIL BEARING PRESSURE OF 2,000 PSF.

2. DIMENSIONS SHOWN CAN BE VARIED AS FIELD CONDITIONS DICTATE, BUT IT IS IMPORTANT THAT THE CORRECT VOLUME AS SHOWN IN TABLE BE USED AND THAT ALLOWABLE SOIL BEARING PRESSURE NOT BE EXCEEDED.

DEKALB COUNTY, GA.
Department of Watershed Management

STANDARD DETAILS

Blocking Detail
Downward Thrust

NOT TO SCALE

08/08

DETAIL NO. P-029

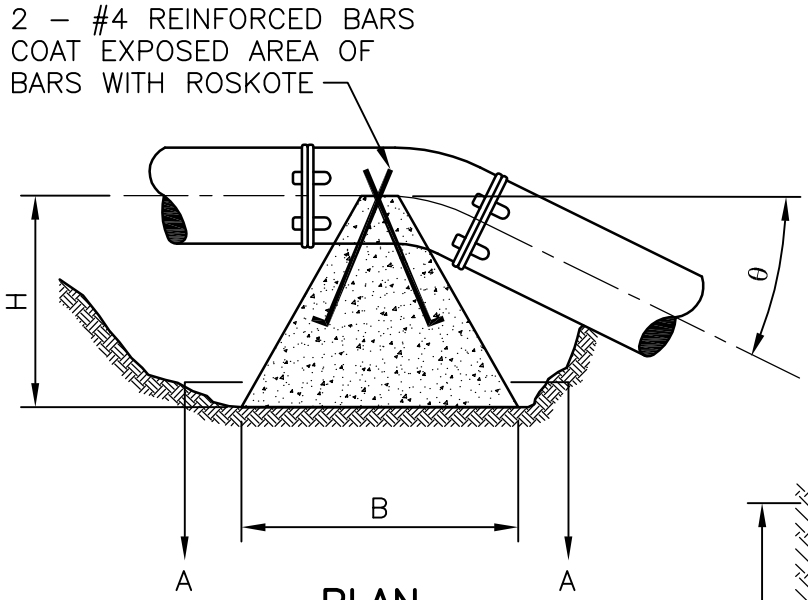

PLAN

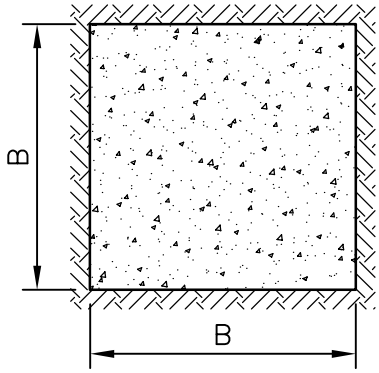

SECTION A–A

FITTING θ	DIA (IN)	B (FT)	H (FT)	VOL (YD^3)
11–1/4	6	3.0	2.2	0.4
	8	3.5	2.4	0.6
	10	4.0	3.2	1.0
	12	4.5	3.5	1.4
	16	5.0	4.8	2.4
22–1/2	6	3.5	2.9	0.7
	8	4.0	3.9	1.2
	10	4.5	4.6	1.9
	12	5.5	4.8	2.7
	16	6.5	5.9	4.8
45	6	4.5	3.4	1.3
	8	5.0	4.6	2.2
	10	6.0	5.1	3.5
	12	6.5	6.2	5.0
	16	8.0	7.3	8.8

NOTES:

1. VOLUME WAS CALCULATED NEGLECTING WEIGHT OF FITTING, WATER, AND BACKFILL USING A STATIC PRESSURE OF 250 PSI.

2. DIMENSIONS OF BLOCK WERE CALCULATED ASSUMING A SOIL BEARING PRESSURE OF 2,000 POUNDS PER SQUARE FOOT.

3. DIMENSIONS SHOWN CAN BE VARIED AS FIELD CONDITIONS DICTATE, BUT IT IS IMPORTANT THAT THE CORRECT VOLUME AS SHOWN IN TABLE BE USED AND THAT ALLOWABLE SOIL BEARING PRESSURE NOT BE EXCEEDED.

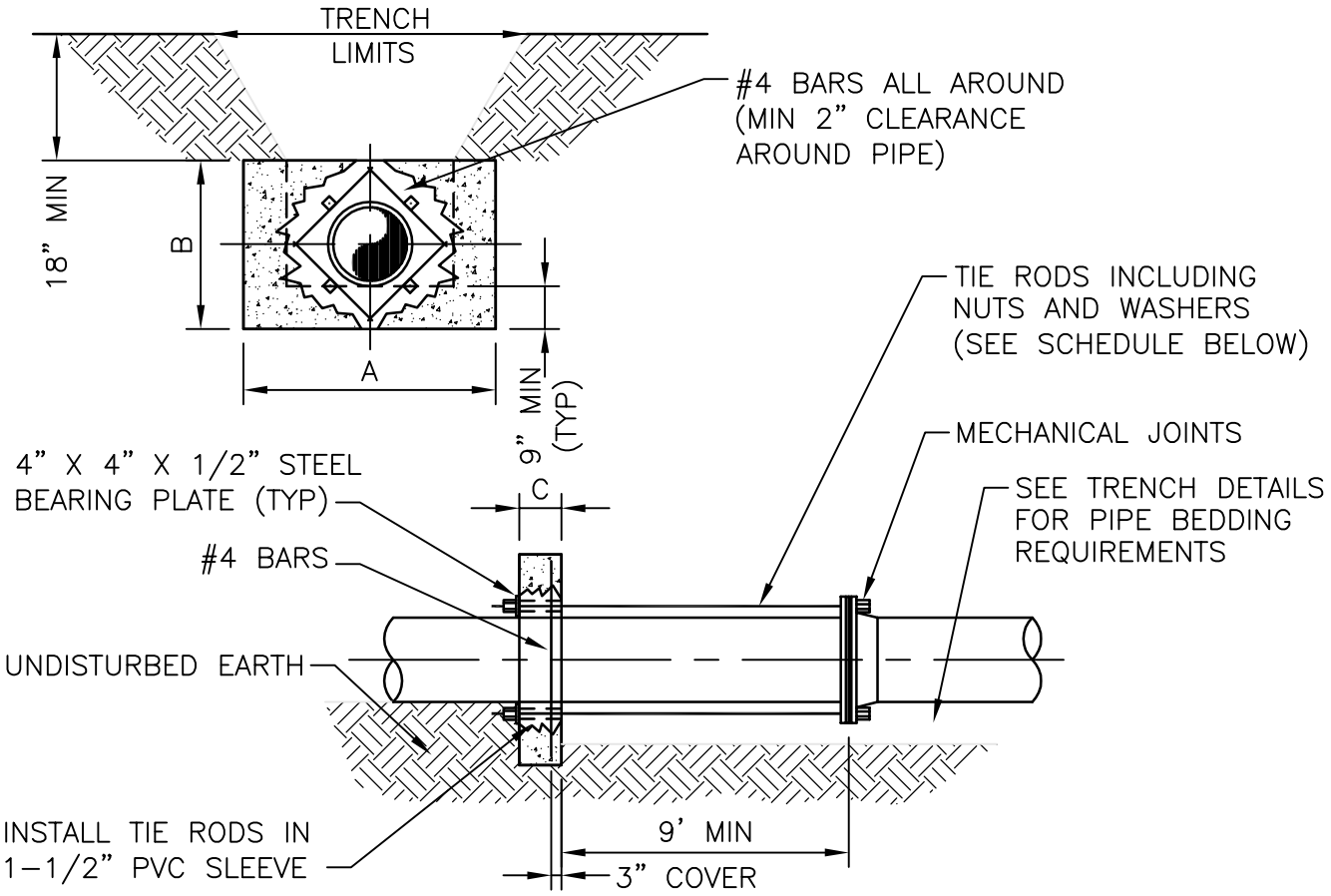

SCHEDULE OF DIMENSIONS AND MATERIALS					
PIPE SIZE (INCHES)	DIMENSIONS (FT.)			TIE RODS REQ'D	
	A	B	C	DIA.	NO.
6	2.0	2.0	1.0	3/4	2
8	2.5	2.5	1.0	3/4	2
10	3.5	3.0	1.0	3/4	2
12	5.0	3.0	1.0	3/4	2
16	6.0	4.0	1.5	3/4	4
20	8.0	5.0	1.5	3/4	6
24	9.0	6.0	1.5	3/4	8
NOTE: THRUST COLLAR AREAS TO BE COMPUTED ON BASIS OF 2000 LBS/SF SOIL RESTRAINT BEARING.					

NOTES:
1. ADDITIONAL REINFORCEMENTS SHALL BE AS SPECIFIED BY THE ENGINEER.
2. MINIMUM COMPRESSIVE STRENGTH FOR CONCRETE SHALL BE 3000 PSI.
3. BEDDING, BACKFILL AND COMPACTION SHALL BE AS SPECIFIED ELSEWHERE IN THE STANDARDS.
4. ALL FORM BOARDS SHALL BE REMOVED PRIOR TO BACKFILL.
5. NO ALLOWANCE SHALL BE MADE FOR FRICTION BETWEEN THE PIPE WALL AND THE THRUST COLLAR.
6. DESIGN PRESSURE:150 PSI.

DEKALB COUNTY, GA.
Department of Watershed Management

STANDARD DETAILS

Thrust Restraint (150 psi)
Tie-rod Installation Detail

NOT TO SCALE

08/08

DETAIL NO. P-031

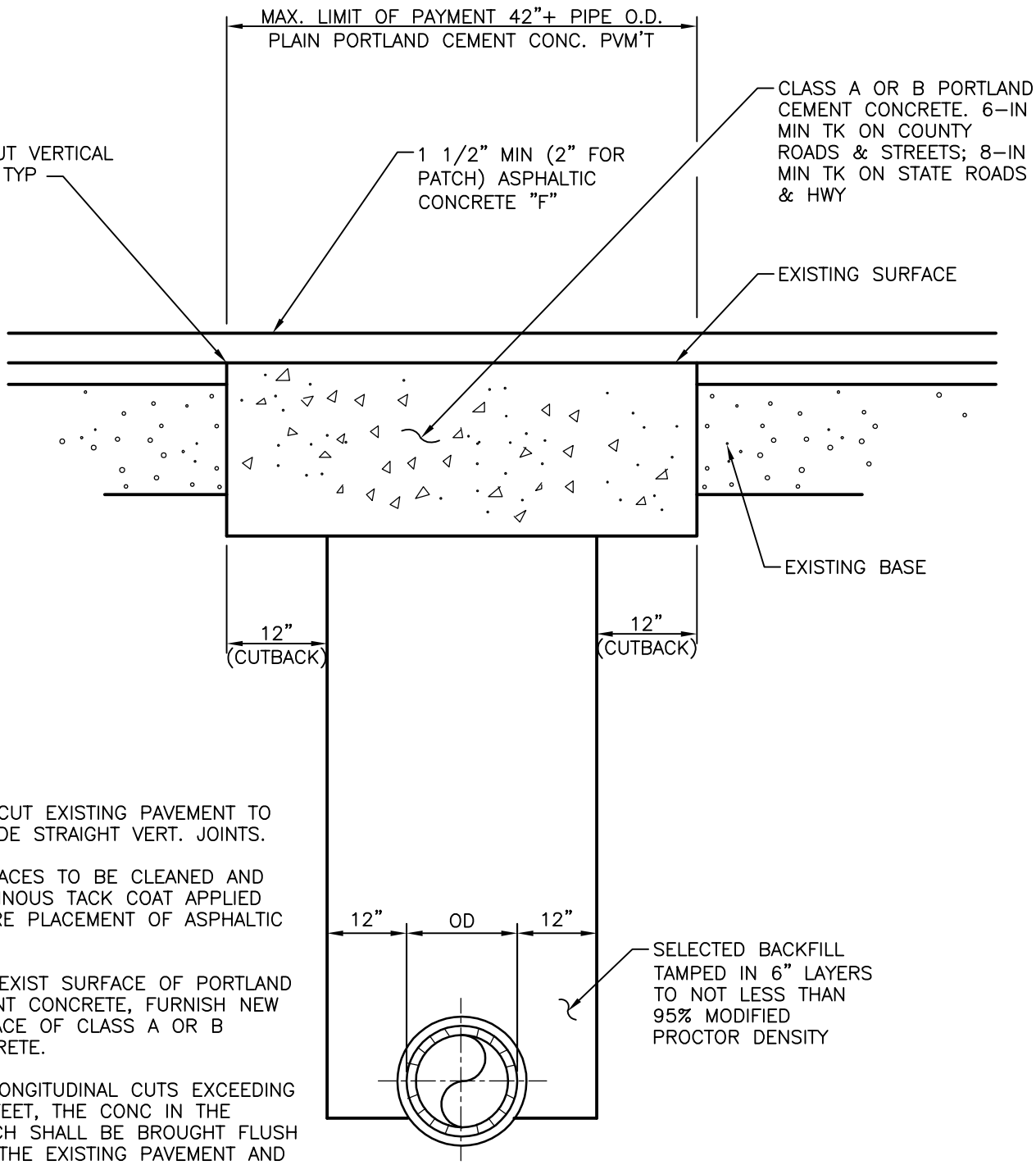

NOTES :

1. SAW CUT EXISTING PAVEMENT TO PROVIDE STRAIGHT VERT. JOINTS.
2. SURFACES TO BE CLEANED AND BITUMINOUS TACK COAT APPLIED BEFORE PLACEMENT OF ASPHALTIC TOP.
3. FOR EXIST SURFACE OF PORTLAND CEMENT CONCRETE, FURNISH NEW SURFACE OF CLASS A OR B CONCRETE.
4. ON LONGITUDINAL CUTS EXCEEDING 100 FEET, THE CONC IN THE TRENCH SHALL BE BROUGHT FLUSH WITH THE EXISTING PAVEMENT AND THE ENTIRE WIDTH OF ROADWAY RESURFACED W/ 1-IN MIN THK OF ASPHALTIC CONC.

DEKALB COUNTY, GA. Department of Watershed Management	**STANDARD DETAILS**	08/08
	Typical Patch and Resurfacing Detail	WATER Matters
	NOT TO SCALE	DETAIL NO. P-032

APPENDIX N

SANITARY SEWER PUMPING STATION: EXAMPLE PUMP STATION DESIGN REVIEW AND APPROVAL FORM

DEKALB COUNTY DEPARTMENT OF PUBLIC WORKS
WATER AND SEWER DIVISION
PUMP STATION DESIGN REVIEW AND APPROVAL FORM

Project Data

Name of Project: Baranco Condominiums

Name of Developer/Contractor: Tim Womack Company: Ambling Properties

Name of Georgia Professional Engineer: Lewis A. Waldron Company: Haines Gipson

Proposed Project Location: Covinton Highway Land Lot: 196 District: 15

Design Data

Pump Manufacturer: Flygt

Pump Model: CP3102.181 MT

Pump Impeller Diameter: 173 mm

Pump Horsepower: 5 hp

Pump Capacity Available for Future Development: 0

Pump Suction Opening Diameter (4" minimum): 4"

Pump Discharge Opening Diameter (4" minimum): 4"

Generator Type: Liquid cooled sparc ignited for natural gass

Generator Manufacturer: Onan

Generator Load Rating: 25 KVA

Telemetry Equipment Manufacturer: Motorola

Required Attachments

1.	Location map depicting property and land lot lines, buildings, and roads.
2.	Pump curve and system head curve.
3.	Pump details, specifications, and shop drawings, including wet well elevations.
4.	Valve details, specifications, and shop drawings.
5.	Flow meter details, specifications, and shop drawings.
6.	Generator details, specifications, and shop drawings, along with automatic transfer switch specifications and shop drawings.
7.	Telemetry equipment details, specifications, and shop drawings.
8.	Single line electrical drawing showing power distribution for the proposed pump station.
9.	Force main design showing size, material, plan, profile, and valve locations.
10.	Depiction of receiving gravity sanitary sewer system and connection to proposed pump station force main.

DEKALB COUNTY DEPARTMENT OF PUBLIC WORKS
WATER AND SEWER DIVISION
PUMP STATION DESIGN CALCULATIONS FORM

Project Data

Name of Project: Baranco Conduminiums

Name of Developer/Contractor: Tim Womack Company: Ambling Properties

Name of Georgia Professional Engineer: Lewis A. Waldro Company: Haines Gipson

Proposed Project Location: Covington Highway Land Lot: 196 District: 15

Design Flow

Proposed Average Daily Flow = 29.17 gpm

Offsite Average Daily Flow = 0 gpm

Total Average Daily Flow = 29.17 gpm

Peaking Factor = 4 gpm

Total Peak Flow = 116.7 gpm

System Head Curve

Static Head Loss = 30.5 feet

Individual Pump Flow Rate = 120 gpm

Force Main Diameter (4" minimum) = 4 inches

Effective Force Main Length = 293 feet

Friction Head Loss, New Condition (C = 130) = 3.1 feet

Friction Head Loss, Aged Condition (C = 100) = 5.0 feet

Total Dynamic Head, New Condition (C = 130) = 33.6 feet

Total Dynamic Head, Aged Condition (C=100) = 35.5 feet

Force Main Velocity = 3.1 feet / second
(2.0 ft/s minimum, 5.0 ft/s maximum)

Wet Well

Wet Well Diameter (6' minimum) = 6 feet

Wet Well Depth = 30 feet

Pump Cycle Time (10 minute minimum) = 109 minutes

Active Storage Volume = 422 gallons

Top of Wet Well Elevation = 975.7 feet

High Level Alarm Elevation = 951.0 feet

Lag Pump On Elevation = 950.5 feet

Lead Pump On Elevation = 950.0 feet

Pumps Off Elevation = 948.0 feet

Low Level Alarm Elevation = 947.5 feet

Force Main Invert = 972.5 feet

Elevation at which Spill will Occur = 967.5 feet

Location of Initial Spill: Manhole 1-E

Pump Station Design Calculations

For

Baranco Townhomes

Dekalb County, Georgia

Haines, Gipson & Associates, Inc.
1550 North Brown Road
Lawrenceville, Georgia 30043
(770) 491-7550
Fax (770) 491-7750

May 2006
Revised December 2006

Estimated sewage flows for lift station at Baranco Townhomes

Type of establishment	Estimated Flow per Unit	Size	Estimated Flow Gal/day	Estimated Flow GPM
Townhouse	400.0 (ADF)	105 (#Units)	42000	29.17
				29.17

Dekalb Co. Peaking Factor 4.01 Use PF = 4

Design flow for lift station 116.7 GPM

For a 4" dia force main - flow reqluired to maintain 2 ft/sec is 80 gpm

Provide design for 120 GPM

Active wet well volmue req'd 300

Elevation of lead pump on 950

Active Wet Well Volume 422

Elevation of pump off 948
Elevation of outlet at manhole 978.5 at outlet
Total static head 30.5 ft

Equiv. Length of pipe

	No.	Equiv Len	Total Len
4" pipe	186		186
90 deg elbows	6	12	72
inlet loss	1	6	6
outlet loss	1	2	2
4" gate valve	1	2	2
4" check valve	1	25	25

293 LF 4" pipe

System head curve 1 for new conditions

Flow gpm	Pipe Dia in	"C"	Equiv L ft	Tot Frict ft	Static ft	TDH ft
50	4.000	130	293	0.61	30.5	31.11
60	4.000	130	293	0.86	30.5	31.36
70	4.000	130	293	1.15	30.5	31.65
80	4.000	130	293	1.47	30.5	31.97
90	4.000	130	293	1.82	30.5	32.32
100	4.000	130	293	2.22	30.5	32.72
120	4.000	130	293	3.10	30.5	33.60
140	4.000	130	293	4.13	30.5	34.63
160	4.000	130	293	5.29	30.5	35.79
180	4.000	130	293	6.57	30.5	37.07
200	4.000	130	293	7.99	30.5	38.49
220	4.000	130	293	9.53	30.5	40.03
240	4.000	130	293	11.19	30.5	41.69
260	4.000	130	293	12.98	30.5	43.48
280	4.000	130	293	14.88	30.5	45.38
300	4.000	130	293	16.91	30.5	47.41
320	4.000	130	293	19.05	30.5	49.55
340	4.000	130	293	21.32	30.5	51.82
360	4.000	130	293	23.69	30.5	54.19
380	4.000	130	293	26.18	30.5	56.68
400	4.000	130	293	28.79	30.5	59.29

System head curve 2 for new conditions

Flow gpm	Pipe Dia in	"C"	Equiv L ft	Tot Frict ft	Static ft	TDH ft
50	4.000	130	293	0.61	28.5	29.11
60	4.000	130	293	0.86	28.5	29.36
70	4.000	130	293	1.15	28.5	29.65
80	4.000	130	293	1.47	28.5	29.97
90	4.000	130	293	1.82	28.5	30.32
100	4.000	130	293	2.22	28.5	30.72
120	4.000	130	293	3.10	28.5	31.60
140	4.000	130	293	4.13	28.5	32.63
160	4.000	130	293	5.29	28.5	33.79
180	4.000	130	293	6.57	28.5	35.07
200	4.000	130	293	7.99	28.5	36.49
220	4.000	130	293	9.53	28.5	38.03
240	4.000	130	293	11.19	28.5	39.69
260	4.000	130	293	12.98	28.5	41.48
280	4.000	130	293	14.88	28.5	43.38
300	4.000	130	293	16.91	28.5	45.41
320	4.000	130	293	19.05	28.5	47.55
340	4.000	130	293	21.32	28.5	49.82
360	4.000	130	293	23.69	28.5	52.19
380	4.000	130	293	26.18	28.5	54.68
400	4.000	130	293	28.79	28.5	57.29

System head curve 1 for aged conditions

Flow gpm	Pipe Dia in	"C"	Equiv L ft	Tot Frict ft	Static ft	TDH ft
50	4.000	100	293	1.00	30.5	31.50
60	4.000	100	293	1.40	30.5	31.90
70	4.000	100	293	1.86	30.5	32.36
80	4.000	100	293	2.38	30.5	32.88
90	4.000	100	293	2.96	30.5	33.46
100	4.000	100	293	3.60	30.5	34.10
120	4.000	100	293	5.04	30.5	35.54
140	4.000	100	293	6.71	30.5	37.21
160	4.000	100	293	8.59	30.5	39.09
180	4.000	100	293	10.68	30.5	41.18
200	4.000	100	293	12.98	30.5	43.48
220	4.000	100	293	15.48	30.5	45.98
240	4.000	100	293	18.18	30.5	48.68
260	4.000	100	293	21.08	30.5	51.58
280	4.000	100	293	24.18	30.5	54.68
300	4.000	100	293	27.47	30.5	57.97
320	4.000	100	293	30.96	30.5	61.46
340	4.000	100	293	34.63	30.5	65.13
360	4.000	100	293	38.50	30.5	69.00
380	4.000	100	293	42.54	30.5	73.04
400	4.000	100	293	46.78	30.5	77.28

System head curve 2 for aged conditions

Flow gpm	Pipe Dia in	"C"	Equiv L ft	Tot Frict ft	Static ft	TDH ft
50	4.000	100	293	1.00	28.5	29.50
60	4.000	100	293	1.40	28.5	29.90
70	4.000	100	293	1.86	28.5	30.36
80	4.000	100	293	2.38	28.5	30.88
90	4.000	100	293	2.96	28.5	31.46
100	4.000	100	293	3.60	28.5	32.10
120	4.000	100	293	5.04	28.5	33.54
140	4.000	100	293	6.71	28.5	35.21
160	4.000	100	293	8.59	28.5	37.09
180	4.000	100	293	10.68	28.5	39.18
200	4.000	100	293	12.98	28.5	41.48
220	4.000	100	293	15.48	28.5	43.98
240	4.000	100	293	18.18	28.5	46.68
260	4.000	100	293	21.08	28.5	49.58
280	4.000	100	293	24.18	28.5	52.68
300	4.000	100	293	27.47	28.5	55.97
320	4.000	100	293	30.96	28.5	59.46
340	4.000	100	293	34.63	28.5	63.13
360	4.000	100	293	38.50	28.5	67.00
380	4.000	100	293	42.54	28.5	71.04
400	4.000	100	293	46.78	28.5	75.28

Pumpstation cycle time

Wet well storage (gal)	422
Pump discharge (gpm)	120
Design max flow (gpm)	116
Time to pump down (min) *	105.5
Time to refill (min) **	3.6
Total cycle time (min)	109.1

* time to pump down is volume of wet well divided by pumping rate minus inflow rate

** time to refill is volume of wet well divided by inflow rate

Wet Well Storage

High water alarm elevation	951.00	
Lowest point of overflow elevation	967.50	
Invert of incoming sewer	957.83	
Station Diameter (ft)	6	
Storage Volume to invert (cf)	193	
Volume of overflow vault (cf)	2624	
Overflow vault square dim (ft)	19.60	inside dimention(use 12 X 32)
Max allowable elevation in box (ft)	957.83	elevation of invert of manhole 1-B
Total volume (cf)	2817	
Volume req'd for 3 hr. detention (cf)		2816

Wet Well Flotation Calculations

Elevation of high water		975.5
Elevation of bottom of wet well		946
Diameter of wet well		6
Wt of wet well		
wet well		45180
Bottom of wet well		5773
Wt of top slab		14109
Wt of flotation collar (6 CY)		24300
Total wt		89362
Buoyance force		
depth	29.5	
Diameter	7	70842
base		3994
Flotation collar		10108
Total buoyance force		84944
Factor of safety		1.052

Down Stream Sewer Capacity

Down stream sewer size	8 in
Down stream sewer slope	0.66 %
Pipe capacity	640000 GPD 444 GPM
Pump discharge	160 GPM
Estimated existing flow	15 GPM
Sewer capacity as a percent of max	0.61 % remaining